INTERNATIONAL STANDARD

ISO 16333

Second edition
2011-02-15

Heavy commercial vehicles and buses — Steady-state rollover threshold — Tilt-table test method

Véhicules utilitaires lourds et autobus — Seuil statique de renversement — Méthode d'essai du plateau incliné

Reference number
ISO 16333:2011(E)

© ISO 2011

Copyright International Organization for Standardization
Provided by IHS under license with ISO
No reproduction or networking permitted without license from IHS

Not for Resale

PDF disclaimer

This PDF file may contain embedded typefaces. In accordance with Adobe's licensing policy, this file may be printed or viewed but shall not be edited unless the typefaces which are embedded are licensed to and installed on the computer performing the editing. In downloading this file, parties accept therein the responsibility of not infringing Adobe's licensing policy. The ISO Central Secretariat accepts no liability in this area.

Adobe is a trademark of Adobe Systems Incorporated.

Details of the software products used to create this PDF file can be found in the General Info relative to the file; the PDF-creation parameters were optimized for printing. Every care has been taken to ensure that the file is suitable for use by ISO member bodies. In the unlikely event that a problem relating to it is found, please inform the Central Secretariat at the address given below.

COPYRIGHT PROTECTED DOCUMENT

© ISO 2011

All rights reserved. Unless otherwise specified, no part of this publication may be reproduced or utilized in any form or by any means, electronic or mechanical, including photocopying and microfilm, without permission in writing from either ISO at the address below or ISO's member body in the country of the requester.

ISO copyright office
Case postale 56 • CH-1211 Geneva 20
Tel. + 41 22 749 01 11
Fax + 41 22 749 09 47
E-mail copyright@iso.org
Web www.iso.org

Published in Switzerland

Copyright International Organization for Standardization
Provided by IHS under license with ISO
No reproduction or networking permitted without license from IHS

Not for Resale

© ISO 2011 – All rights reserved

Contents

Page

Foreword iv
Introduction v
1 Scope 1
2 Normative references 1
3 Terms and definitions 1
4 Principle 2
5 Variables 4
6 Measuring equipment 4
6.1 General 4
6.2 Description 4
6.3 Data processing 5
7 Test conditions 5
7.1 General 5
7.2 Tilt-table properties 5
7.3 Ambient conditions 5
7.4 Test vehicle 5
8 Test procedure 6
8.1 Installation of vehicle on tilt-table 6
8.2 Test tilts 7
9 Data analysis 8
9.1 General 8
9.2 Tilt-table ratio 8
9.3 Optional data presentations 8
Annex A (normative) **Test report — Additional test conditions** 12
Annex B (informative) **Error sources** 13

© ISO 2011 – All rights reserved
Copyright International Organization for Standardization
Provided by IHS under license with ISO
No reproduction or networking permitted without license from IHS
Not for Resale

Foreword

ISO (the International Organization for Standardization) is a worldwide federation of national standards bodies (ISO member bodies). The work of preparing International Standards is normally carried out through ISO technical committees. Each member body interested in a subject for which a technical committee has been established has the right to be represented on that committee. International organizations, governmental and non-governmental, in liaison with ISO, also take part in the work. ISO collaborates closely with the International Electrotechnical Commission (IEC) on all matters of electrotechnical standardization.

International Standards are drafted in accordance with the rules given in the ISO/IEC Directives, Part 2.

The main task of technical committees is to prepare International Standards. Draft International Standards adopted by the technical committees are circulated to the member bodies for voting. Publication as an International Standard requires approval by at least 75 % of the member bodies casting a vote.

Attention is drawn to the possibility that some of the elements of this document may be the subject of patent rights. ISO shall not be held responsible for identifying any or all such patent rights.

ISO 16333 was prepared by Technical Committee ISO/TC 22, *Road vehicles*, Subcommittee SC 9, *Vehicle dynamics and road-holding ability*.

This second edition cancels and replaces the first edition (ISO 16333:2004), of which it constitutes a minor revision.

© ISO 2011 – All rights reserved
Copyright International Organization for Standardization
Provided by IHS under license with ISO
No reproduction or networking permitted without license from IHS
Not for Resale

Introduction

The main purpose of this International Standard is to provide repeatable and discriminatory test results.

The dynamic behaviour of a road vehicle is a very important aspect of active vehicle safety. Any given vehicle, together with its driver and the prevailing environment, constitutes a closed-loop system that is unique. The task of evaluating the dynamic behaviour is therefore very difficult since the significant interaction of these driver-vehicle-environment elements are each complex in themselves. A complete and accurate description of the behaviour of the road vehicle must necessarily involve information obtained from a number of different tests.

Since this test method quantifies only one small part of the complete vehicle handling characteristics, the results of these tests can only be considered significant for a correspondingly small part of the overall dynamic behaviour.

Moreover, insufficient knowledge is available concerning the relationship between overall vehicle dynamic properties and accident avoidance. A substantial amount of work is necessary to acquire sufficient and reliable data on the correlation between accident avoidance and vehicle dynamic properties in general and the results of these tests in particular. Consequently, any application of this test method for regulation purposes will require proven correlation between test results and accident statistics.

© ISO 2011 – All rights reserved

Copyright International Organization for Standardization
Provided by IHS under license with ISO
No reproduction or networking permitted without license from IHS
Not for Resale

Copyright International Organization for Standardization
Provided by IHS under license with ISO
No reproduction or networking permitted without license from IHS
Not for Resale

Heavy commercial vehicles and buses — Steady-state rollover threshold — Tilt-table test method

1 Scope

This International Standard specifies a tilt-table test method for estimating the steady-state rollover threshold of a heavy commercial vehicle or bus, i.e. the maximum lateral acceleration that the test vehicle could sustain in steady-state turning without rolling over.

It is applicable to complete roll units/combinations of roll-coupled vehicle units — e.g. single-unit vehicles, tractor-semitrailer combinations, articulated buses, full trailers, B-train combinations — of commercial vehicles, commercial vehicle combinations, buses or articulated buses as defined in ISO 3833, and under Categories M3, N2, N3, O3 and O4 of ECE and EC vehicle regulations (trucks and trailers with maximum weights above 3,5 t and buses and articulated buses with maximum weights above 5 t).

It does not cover transient, vibratory or dynamic rollover situations; nor does it consider the influences of dynamic stability control systems. Furthermore, the quality of the estimate of the steady-state rollover threshold provided by the test method decreases as the tilt angle required to produce rollover increases. Even so, the results for heavy vehicles with high rollover thresholds can be used for comparing their relative steady-state roll stability.

NOTE For further limitations of the specified test method, see Annex B.

2 Normative references

The following referenced documents are indispensable for the application of this document. For dated references, only the edition cited applies. For undated references, the latest edition of the referenced document (including any amendments) applies.

ISO 3833, *Road vehicles — Types — Terms and definitions*

ISO 8855, *Road vehicles — Vehicle dynamics and road-holding ability — Vocabulary*

ISO 15037-2:2002, *Road vehicles — Vehicle dynamics test methods — Part 2: General conditions for heavy vehicles and buses*

3 Terms and definitions

For the purposes of this document, the terms and definitions given in ISO 8855 and ISO 15037-2, and the following apply.

3.1
critical tilt angle
ϕ_{Tc}
angle at which critical wheel lift occurs

3.2
critical wheel lift
first moment at which one or more wheels lift from the table surface, following which, stable roll equilibrium of the vehicle cannot be established

© ISO 2011 – All rights reserved

Copyright International Organization for Standardization
Provided by IHS under license with ISO
No reproduction or networking permitted without license from IHS
Not for Resale

3.3
roll unit
essentially self-supporting combination of roll-coupled vehicle units, the combination being free to roll independently of other units

NOTE Typically, vehicle units joined by fifth-wheel couplings (which provide roll coupling) belong to the same roll unit, while vehicle units joined by pintle hitches (which do not provide roll coupling) belong to different roll units. Roll units including converter dollies could require minor vertical support at the drawbar pintle hitch.

3.4
steady-state rollover threshold
maximum magnitude of lateral acceleration that a vehicle can sustain during steady-state cornering on a flat surface without rolling over

3.5
tilt angle
ϕ_T
angle between the horizontal and a vector that is in the plane of the tilt-table surface and is perpendicular to the tilt axis

3.6
tilt-table
apparatus for supporting a vehicle on its tyres on a nominally planar surface and for tilting the vehicle in roll by tilting that surface about an axis nominally parallel to the X-axis of the vehicle

NOTE A tilt-table can be composed either of a single structure supporting all tyres of the vehicle on a contiguous surface or of multiple structures supporting one or more axles on separate, but nominally coplanar, surfaces.

3.7
tilt-table ratio
TTR
tan (ϕ_{Tc}), i.e. tan(ϕ_T), at the occurrence of critical wheel lift

3.8
trip rail
rail or kerb fixed to the tilt-table surface and oriented longitudinally beside the low-side tyre(s) in order to prevent the tyre(s) from sliding sideways

3.9
wheel lift of the ith axle
l_{wi}
condition in which either all left or all right tyres of the ith axle are out of contact with the surface of the tilt-table

NOTE It is a logical variable with values of 1 (true) or 0 (false).

4 Principle

The tilt-table test is a physical simulation of the roll-plane behaviour of a vehicle in a quasi-steady-state turn of gradually increasing severity. In this test, the vehicle is mounted on a tilt-table with the vehicle's longitudinal axis located parallel to an axis about which the table can be tilted. The tilt-table is then gradually tilted up to the point at which the vehicle becomes unstable in roll. Safety restraints are used to prevent the actual rollover of the vehicle.

When the table is at a non-zero tilt angle, the test simulates a non-vibratory steady turn. As shown in Figure 1, the component of gravitational forces parallel to the table surface provides a simulation of the centrifugal forces experienced by a vehicle in turning manoeuvres. The progressive application of these forces by slowly tilting the table serves to simulate the effects of quasi-statically increasing lateral acceleration in steady turning manoeuvres.

© ISO 2011 – All rights reserved
Copyright International Organization for Standardization
Provided by IHS under license with ISO
No reproduction or networking permitted without license from IHS
Not for Resale

When the table is tilted, the centrifugal force is simulated by the component of the gravitational force parallel to the table surface, $m \cdot g \cdot \sin(\phi_T)$, and the weight of the vehicle is simulated by the component of the gravitational force that is perpendicular to the table, $m \cdot g \cdot \cos(\phi_T)$, where m is the mass of the vehicle, g is the gravitational acceleration and ϕ_T is the tilt angle. Since the primary mechanism of actual rollover depends on the ratio of the centrifugal forces to the vertical forces, it is appropriate to take the ratio of the simulated lateral acceleration forces to the simulated weight to represent the lateral acceleration. At the moment of roll instability, i.e. when critical wheel lift occurs, the tangent of the tilt angle, i.e. the tilt-table ratio (TTR), is an estimate of the steady-state rollover threshold, expressed in gravitational units:

$$\mathrm{TTR} \equiv \tan\left(\phi_{\mathrm{Tc}}\right) = \frac{m \cdot g \cdot \sin\left(\phi_{\mathrm{Tc}}\right)}{m \cdot g \cdot \cos\left(\phi_{\mathrm{Tc}}\right)} \tag{1}$$

As the vehicle is progressively tilted during the tilt-table test, vertical load is progressively transferred from tyres on one side of the vehicle to tyres on the other side. Tyres on the unloaded side will eventually lift off of the table surface. Typically, wheel lift does not take place simultaneously for all axles; rather, lift-off occurs at different axles at different angles of tilt. Tyres that lift off of the table early in the process may rise well off the table surface before the critical wheel lift occurs and the vehicle becomes unstable in roll. It is often the case that the vehicle will become unstable even though all tyres of one or more axles (often the steer axle) remain firmly on the table surface. The tilting motion of the table should be stopped simultaneously with the vehicle becoming unstable in roll, and safety restraints should be arranged to arrest the roll motion of the vehicle immediately following that critical tyre-lift event.

Annex B presents further discussion of the tilt-table test method dealing with conceptual and practical sources of error.

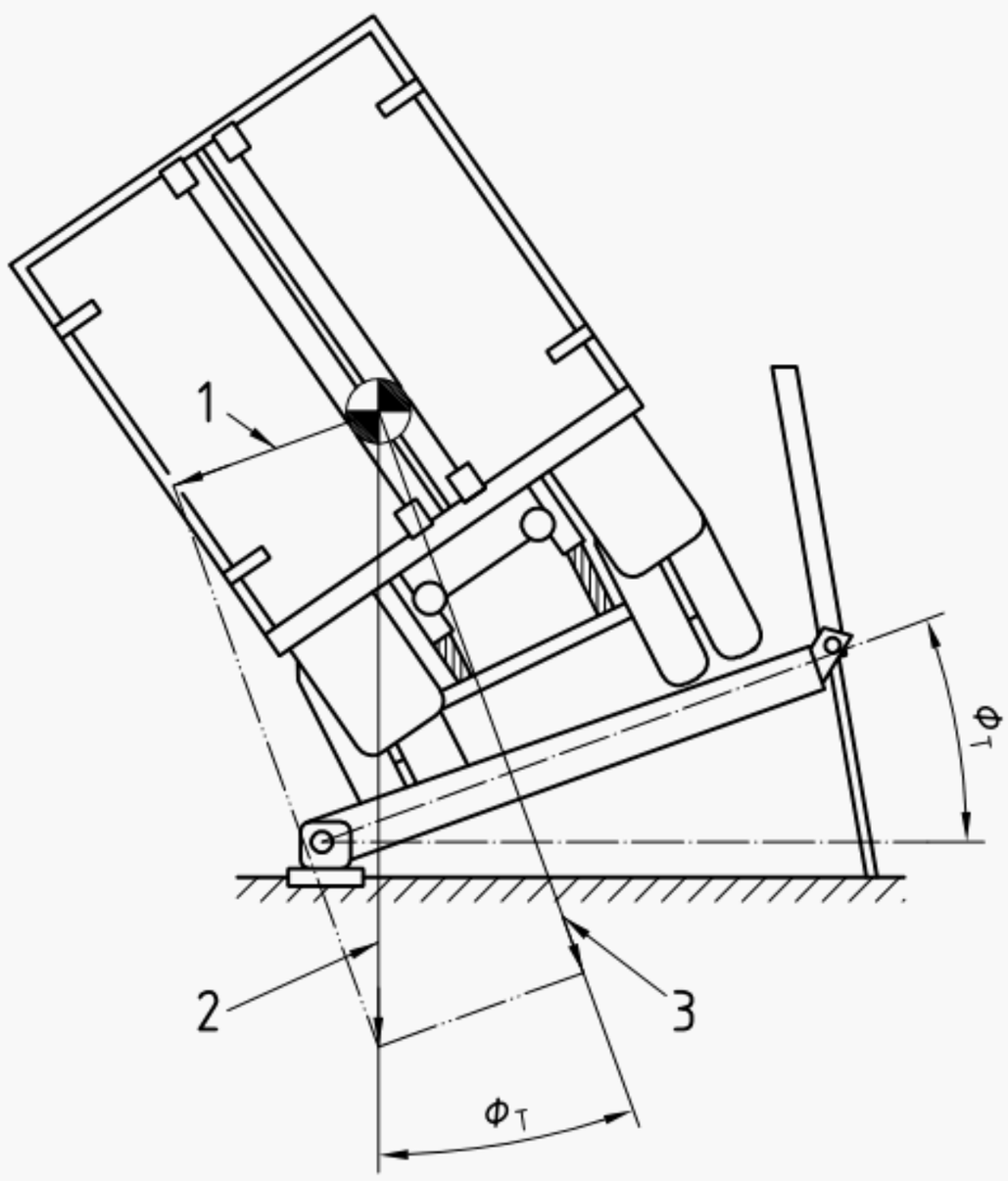

Key

1 simulated centrifugal force = $m \cdot g \cdot \sin(\phi_T)$

2 actual weight = $m \cdot g$

3 simulated weight = $m \cdot g \cdot \cos(\phi_T)$

Figure 1 — Schematic diagram of tilt-table test

© ISO 2011 – All rights reserved

Copyright International Organization for Standardization
Provided by IHS under license with ISO
No reproduction or networking permitted without license from IHS
Not for Resale

5 Variables

The following variables shall be determined:

a) wheel lift at each axle (l_{wi});

b) tilt angle at each axle of the vehicle (ϕ_{Ti}).

Alternatively, where it is independently assured that all values of ϕ_{Ti} are within a range of ± 0,1°, tilt angle (ϕ_T) shall be determined.

Some or all of the following variables should be determined, in order to aid in analysing the vehicle's behaviour:

— roll angle(s) relative to the tilt-table surface at relevant positions on the sprung mass(es);

— roll angle(s) relative to the tilt-table surface of unsprung mass(es);

— lateral suspension deflections;

— tyre deflections;

— air-spring pressures;

— lateral deflections of relevant elements of the chassis or payload.

It is also recommended that the data record include event markers to indicate the occurrence of significant events of interest, e.g. the transition through spring lash.

6 Measuring equipment

6.1 General

Measurement and recording equipment shall be in accordance with ISO 15037-2.

6.2 Description

All variables shall be measured by means of appropriate transducers, whose time histories should be recorded by a multi-channel recording system. Typical operating ranges and recommended maximum errors of the transducer recording systems for the variables not listed in ISO 15037-2 are shown in Table 1.

Table 1 — Typical operating ranges and recommended maximum errors of variables not listed in ISO 15037-2

Variable	Typical operating range	Recommended max. error of combined system
Tilt angle(s)	40°	± 0,1°
Roll angles relative to the tilt-table surface	15°	± 0,1°
Lateral deflections	± 50 mm	± 1 mm
Air-spring inflation pressures	1 500 kPa	15 kPa

Copyright International Organization for Standardization
Provided by IHS under license with ISO
No reproduction or networking permitted without license from IHS
Not for Resale
© ISO 2011 – All rights reserved

6.3 Data processing

The tilt-table test is a quasi-static test so that data processing concerns relating the natural frequencies of vehicle responses and the frequency response of the instrument system do not apply in the usual manner. However, the bandwidths of the analog data systems and the sampling rates of digitising systems, in relationship to the maximum tilt rate of the table and the maximum roll rates of the vehicle and its components, influence the overall accuracy of the measurement system. Specifications should be in accordance with ISO 15037-2. In any case, the time response and latencies of all analog and digital elements of the measurement system shall be properly considered in evaluating measurement accuracy.

7 Test conditions

7.1 General

Limits and specifications for the tilt-table, ambient conditions and vehicle test conditions indicated below shall be maintained during the test. Any deviations shall be reported in the test report.

7.2 Tilt-table properties

The tilt-table facility shall have the properties given in Table 2. In addition, the tilt-table facility shall provide lateral constraint of the vehicle through adequate surface friction or, optionally, through the use of a trip rail, as specified in 8.1.2.

Table 2 — Tilt-table requirements

Property	Requirement
Tilt angle variance at the positions of axle support	± 0,1°
Pivot axis alignment	
Overall:	Horizontal within ± 0,25°
Multiple axle tables:	Co-linear within ± 2,5 mm
Minimum tilt rate	< 0,05°/s
NOTE Specification of tilt angle variance implies requirements on table stiffness, surface flatness and/or alignment of individual axle tables (see Annex B).	

7.3 Ambient conditions

The ambient wind speed shall be ⩽ 2m/s.

Since, in certain cases, the temperature of vehicle components may influence test results, ambient temperature shall be reported.

7.4 Test vehicle

7.4.1 General

The test vehicle shall be a complete, single roll unit.

The specifications of ISO 15037-2 shall apply except that items relating to test-induced changes in tyre properties and to conditions and adjustments of the engine are moot. Items relating to other components of the drive train may also not apply.

© ISO 2011 – All rights reserved

Copyright International Organization for Standardization
Provided by IHS under license with ISO
No reproduction or networking permitted without license from IHS
Not for Resale

7.4.2 Self-regulating suspensions

For the standard test condition, if the test vehicle is equipped with height- or load-regulating suspensions, suspension ride height or load shall be appropriately established before testing begins, and the active adjustment function of the suspension shall be disabled during testing. Optionally, in some cases, e.g. when the regulating system has a relatively fast response, it may be appropriate to allow self-regulation functions to remain active during the tilt test. In either case, the state of the self-regulation shall be reported. Annex B includes discussion on disabling self-regulating suspension features.

For height-regulating suspensions, reliable means shall be provided to identify the proper ride height within ± 5 mm during manual inflation. For load-regulating suspensions, reliable means shall be provided to identify the proper inflation pressure within ± 5 % or ± 10 kPa, whichever is greater, during manual inflation.

8 Test procedure

8.1 Installation of vehicle on tilt-table

8.1.1 Alignment

For the standard test condition, the X-v-axis of each vehicle unit shall be parallel to the table pivot axis within ± 50 mm at each axle and, when applicable, at the coupling joints.

8.1.2 Lateral constraint

For the standard test condition, the surface of the tilt-table shall be such that tyre friction is adequate to preclude the vehicle sliding sideways at the critical tilt angle. Additional safety restraints should be used to arrest lateral motion in the event that the vehicle were to slide sideways on the table surface.

Optionally, a trip rail of any height up to the specified maximum may be provided immediately adjacent to the low-side tyre of each axle such as to prevent the vehicle from sliding sideways at high tilt angles. The maximum height of the trip rail shall be either 60 mm or two-thirds of the height between the wheel rim and the tilt-table, whichever is larger. If a trip rail is used, the geometry of the trip rail shall be recorded.

NOTE 1 Table surfaces that achieve friction coefficients approaching unity are available. See Annex B.

NOTE 2 The use of trip rails can be expected to influence the result of the test by increasing TTR slightly. See Annex B.

8.1.3 Longitudinal constraint

Longitudinal constraint of the vehicle shall be accomplished by constraints applied at one, and only one, axle. When applicable, the transmission shall be in neutral and differential locks shall not be applied.

The proper response of heavy vehicle suspensions during tilt tests typically requires small, but free longitudinal motion of the axles. When individual axle tables are used, care should be taken that such motion can safely take place on the surfaces of the tables.

If longitudinal constraint is provided by blocking tyres of a steering axle, the steering system should be locked appropriately. In any case, it is also recommended that additional safety constraints be used, such as slack, longitudinal cables or chains applied to one or more axles near the low-side tyres.

8.1.4 Roll restraints

Safety restraints shall be provided that are capable of fully arresting the roll motion of the test vehicle immediately after critical wheel lift occurs.

© ISO 2011 – All rights reserved
Copyright International Organization for Standardization
Provided by IHS under license with ISO
No reproduction or networking permitted without license from IHS
Not for Resale

8.1.5 Auxiliary vertical support

Some test vehicles require auxiliary vertical support at the coupling joint. For example, a semitrailer coupled to a converter dolly requires support of the dolly drawbar at the pintle hitch. In such cases, a mechanism shall be provided that

a) provides the necessary vertical support in a manner representative of normal use,

b) maintains lateral position according to 8.1.1, and

c) provides no significant roll coupling at the support point.

8.1.6 Suspension condition

8.1.6.1 Neutral roll condition

It is recommended that, prior to each test, each suspension of the test vehicle be placed in a nominally neutral roll condition (i.e. with respect to hysteresis resulting from Coulomb friction). Means to do this may include, but are not limited to, the following.

— Reinstall the vehicle on the table prior to each test.

— For suspensions with steel springs, unload the suspension by jacking up the sprung mass and then lower the sprung mass while maintaining nominally zero roll.

— For suspensions with air springs, substantially displace the suspension vertically by inflating/deflating the air springs equally on left and right sides.

NOTE Initial conditions of hysteresis in the suspensions do not typically have a significant effect on the steady-state rollover threshold of the vehicle. Initial conditions do, however, influence the behaviour of the vehicle in earlier stages of the tilting process.

8.1.6.2 Suspension ride heights

Immediately prior to each test run, all self-regulating suspensions shall be adjusted such that they are at the proper ride height or, in the case of the suspensions for certain auxiliary axles, at the prescribed inflation pressure. Initial ride height of each suspension shall be reported.

8.2 Test tilts

Tests shall be conducted tilting the vehicle to the left and to the right. Alternatively, if the vehicle is known to be less stable in one direction, tests may be conducted only in that direction.

A minimum of three tests should be performed in each direction in which testing is conducted.

During the tilting process, the variation of tilt angle between the positions of support of the individual axles shall be within ± 0,1°.

Tests shall be initiated at a tilt angle of 0 ± 0,5°. Tilt rate should not exceed an absolute value of 0,05°/s in the vicinity of events of interest (e.g. wheel lift). This is particularly important when the vehicle is going through lashes in suspensions or couplings. At such times, especially if the tilt rate is higher than 0,05°/s, it is recommended to pause the tilting and let the vehicle stabilize before the tilting is continued. It is permissible (and often advantageous) to pause the tilting process at any time during a test. However, tilt angle should not be reduced during a test. Tilting should be stopped as quickly as possible following the critical wheel lift.

When the test vehicle is equipped with self-regulating suspensions, the tilt-table shall be returned to the level condition as soon as practicable following the test, and the final state of the suspensions shall be determined and reported. If final conditions vary significantly from initial conditions as a result of malfunctions, such as air-system leaks, the malfunctions shall be corrected and the test shall be repeated.

© ISO 2011 – All rights reserved

Copyright International Organization for Standardization
Provided by IHS under license with ISO
No reproduction or networking permitted without license from IHS
Not for Resale

Prior to actual tests, it is recommended that one or more preliminary tilts be conducted. The purposes of a preliminary tilt may include but are not limited to the following:

— proper adjustment of the safety restraints for arresting roll motion of the vehicle;

— establishing the sequence and approximate tilt angles at which wheel lift and other significant events take place;

— identifying the critical wheel lift;

— initial installation of wheel lift indicators (e.g. switches).

Specific actions in a preliminary tilt depend on the specific design of the tilt-table facility. Typically, a preliminary tilt would be initiated with safety restraints adjusted in a very conservative manner, i.e. in a manner that would not allow all the free roll motion of the vehicle as required during an actual test. The tilt would be proceeded with cautiously, with several pauses, typically at wheel lift points, for readjustment of safety restraints.

9 Data analysis

9.1 General

General data shall be presented in the test report in accordance with ISO 15037-2:2002, Annexes A and B, and in accordance with Annex A of this International Standard. For every change in equipment of the vehicle (e.g. load), the general data for the vehicle shall be documented again.

9.2 Tilt-table ratio

The tilt-table ratio (TTR) shall be determined for each test run. When tilt angles are measured individually for each axle, ϕ_{Tc} shall be determined from the average of the individual angles at critical wheel lift.

For each direction of tilt, the mean value of the estimates and the 90 % confidence interval of the mean value shall be determined and reported. The lesser of the means shall be taken as the estimate of steady-state rollover threshold for the vehicle.

NOTE Good experimental practice ought to result in run-to-run repeatability of TTR of better than 0,005. 90 % confidence intervals of 0,001 for the mean estimate of TTR from three or four tests are not unusual. Repeatability of significant events prior to instability is often somewhat less.

9.3 Optional data presentations

9.3.1 Wheel-lift events

Estimates of the lateral acceleration at which significant events of interest, such as wheel lift or onset of lash, take place, may be determined in similar fashion as that used to determine TTR, i.e. the simulated lateral acceleration $= \tan(\phi_T)$, expressed in gravitational units, or $= g \cdot \tan(\phi_T)$, expressed in metres per second squared. The time histories of various motion responses of the vehicle (e.g. sprung mass roll angle) and the time history of tilt angle (or averaged tilt angle) may be used to produce X-Y plots of motion response versus simulated lateral acceleration. See, for example, Figure 2.

Copyright International Organization for Standardization
Provided by IHS under license with ISO
No reproduction or networking permitted without license from IHS
Not for Resale

© ISO 2011 – All rights reserved

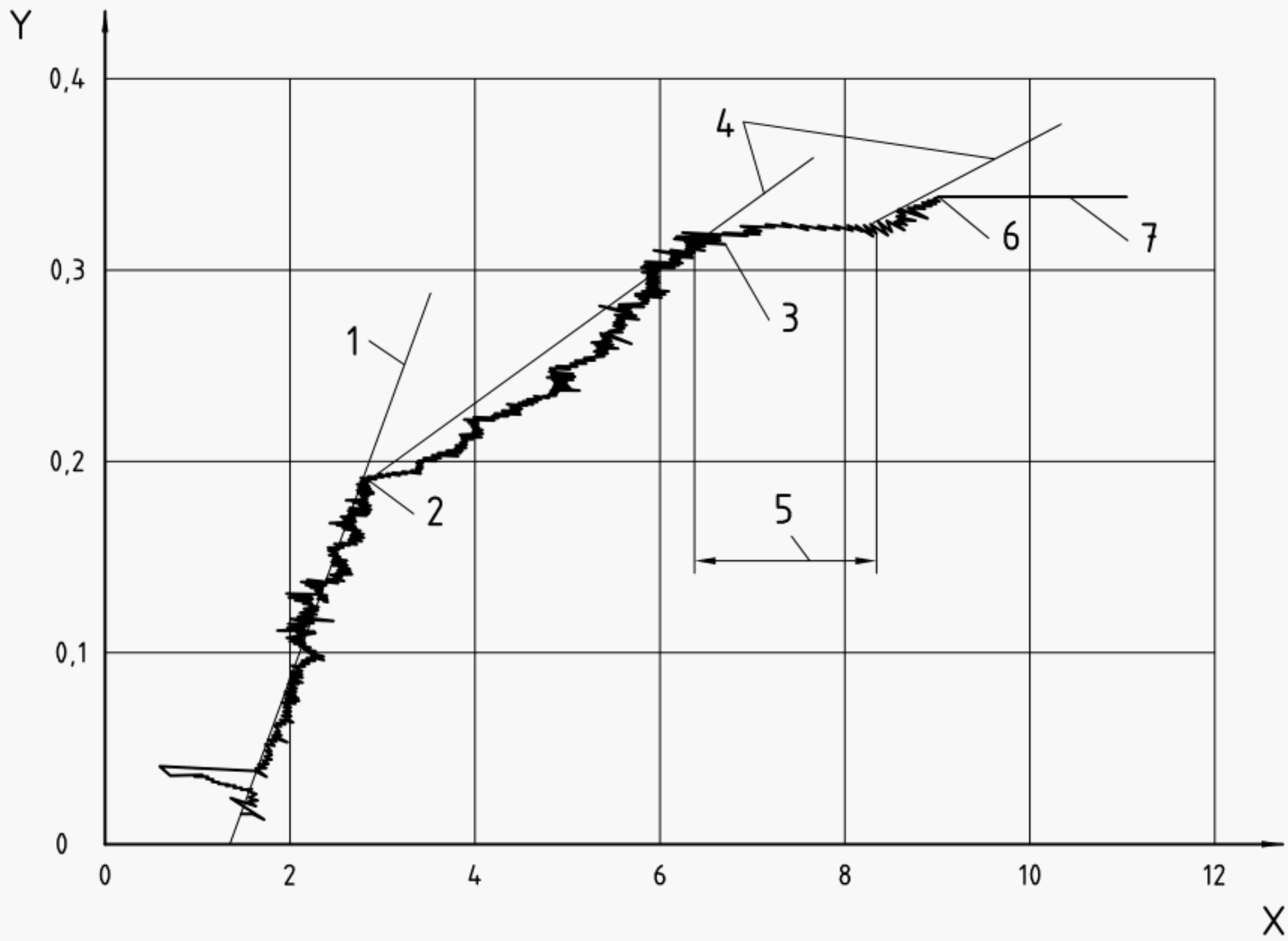

Key

X trailer body roll angle, degrees

Y simulated lateral acceleration, gravitational units

1 high system roll stiffness with both tractor and trailer suspensions in effect

2 lift-off of the trailer tyres

3 lift-off of tyres at the second tractor drive axle and start of fifth-wheel lash

4 lower system roll stiffness as tyres at various axles lift

5 trailer rolls freely as the system travels through the fifth-wheel lash: system is locally unstable

6 lift-off of tyres at the first tractor drive axle

7 system is unstable: rollover

Figure 2 — Example of tilt-table data presentation — Tilt-table data for a five-axle, tractor-semi-trailer combination

9.3.2 Compliant responses

In certain analyses of tilt-table data, it is appropriate to use the actual component of gravitational acceleration acting laterally to the vehicle. This is particularly true when the analyses focus directly on the compliant response(s) of components of the vehicle (rather than on tyre-lift events), as it is the product of the sine of the tilt angle and the weight of the vehicle that indicates the actual lateral force to which the vehicle is subject. In such cases, lateral acceleration should be represented as $\sin(\phi_T)$, expressed in gravitational units, or as $g \cdot \sin(\phi_T)$, in metres per second squared. See the examples shown in Figures 3 and 4.

© ISO 2011 – All rights reserved

Copyright International Organization for Standardization
Provided by IHS under license with ISO
No reproduction or networking permitted without license from IHS
Not for Resale

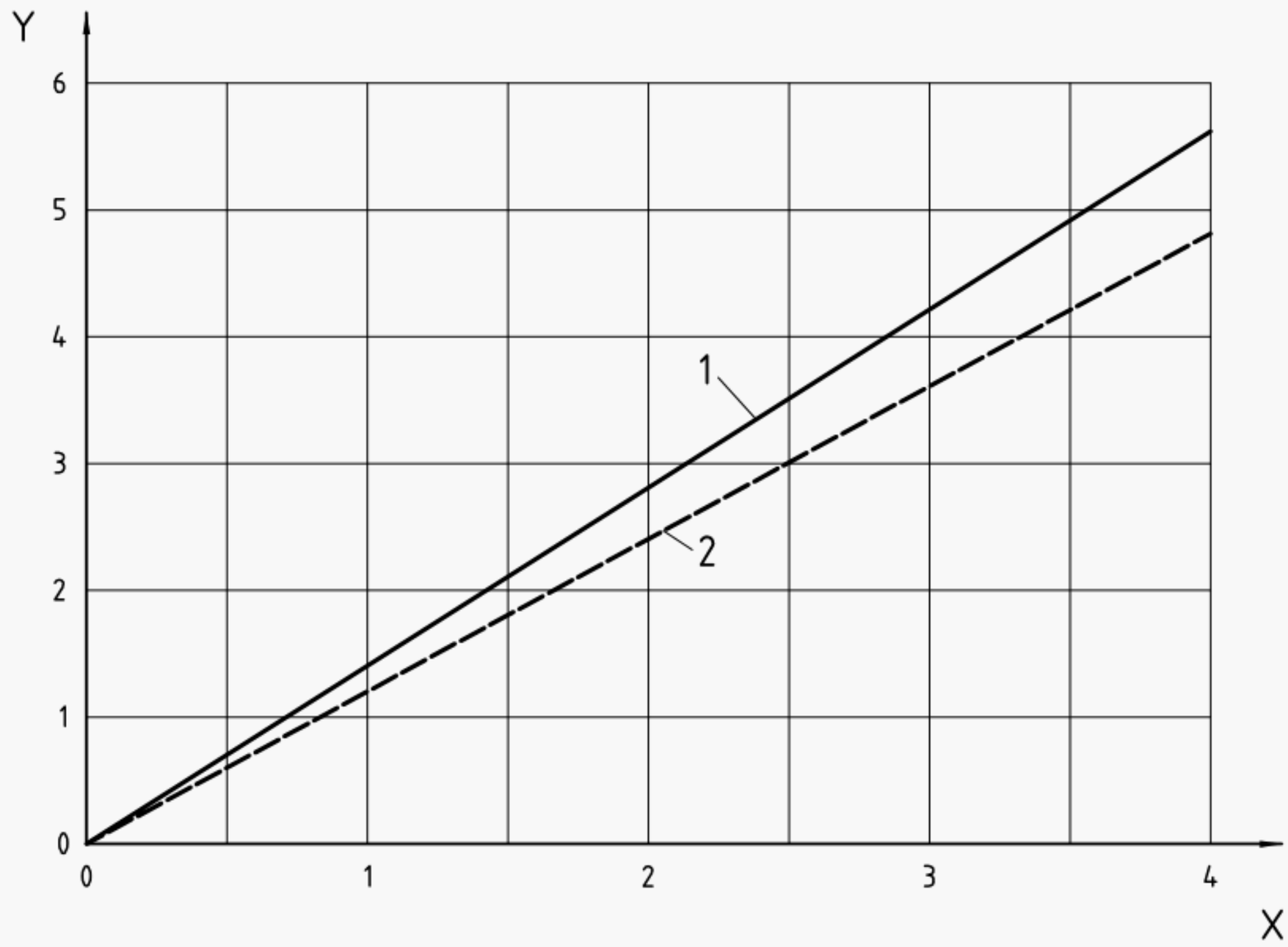

Key

X $g \cdot \sin(\phi_T)$, m/s^2

Y roll angle, degrees

1 roll angle at rear of chassis

2 roll angle at front of chassis

Figure 3 — Example of tilt-table data presentation — Tilt-table data for a vehicle with torsionally compliant frame

--`,,```,,,,```-`-`,,`,,`,`,,`---

© ISO 2011 – All rights reserved
Copyright International Organization for Standardization
Provided by IHS under license with ISO
No reproduction or networking permitted without license from IHS
Not for Resale

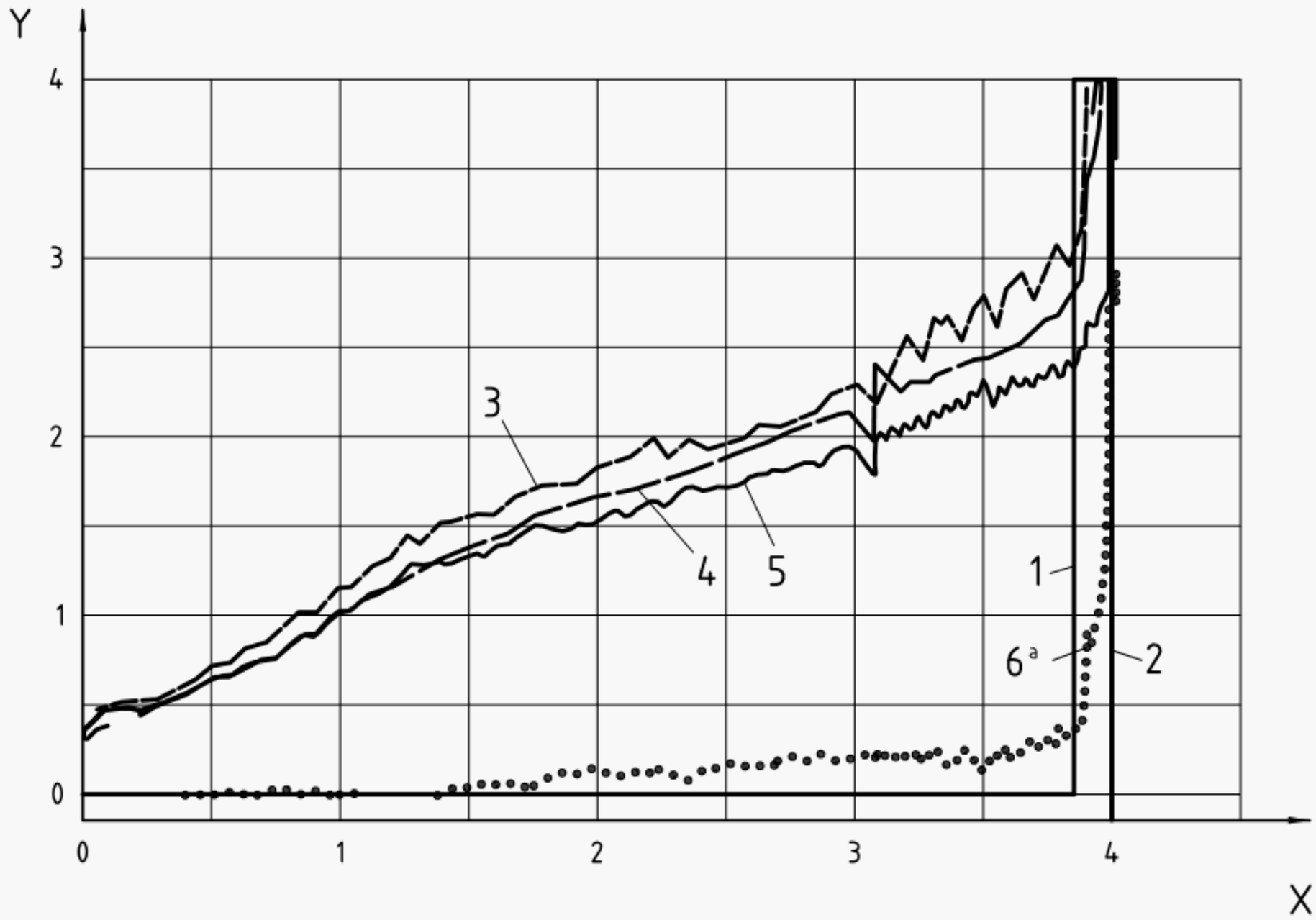

Key

X $g \cdot \sin(\phi_T)$, m/s^2

Y roll angle, degrees

1 trailer tyres lift

2 drive-axle tyres lift

3 roll angle determined at trailer frame at fifth wheel

4 roll angle determined at trailer frame at trailer axles

5 roll angle determined at tractor frame at fifth wheel

6 relative roll angle determined at fifth-wheel opening (= No. 2 − No. 1)

[a] Fifth-wheel lash opens.

Figure 4 — Example of tilt-table data presentation

© ISO 2011 – All rights reserved
Copyright International Organization for Standardization
Provided by IHS under license with ISO
No reproduction or networking permitted without license from IHS
Not for Resale

Annex A
(normative)

Test report — Additional test conditions

The test report for test conditions shall be in accordance with ISO 15037-2:2002, Annex B, together with the following additions.

Tilt-table

Make and location: .....

Description: .....

Minimum tilt rate: ..... °/s

Trip rails used: …… No ☐ Yes ☐

Description: .....

Ride height

At Axle 1: ..... m

At Axle n: ..... m

Geometry of the trip rail

Copyright International Organization for Standardization
Provided by IHS under license with ISO
No reproduction or networking permitted without license from IHS
Not for Resale
© ISO 2011 – All rights reserved

Annex B
(informative)

Error sources

B.1 Conceptual sources of error

The quality of tan(ϕ_T) as an estimate of actual steady-state roll stability depends, in part, on how closely cos(ϕ_T) approximates unity. In the tilt-table experiment, when TTR is taken as the estimate of the critical lateral acceleration, both the vertical and lateral loading of the vehicle are reduced by the factor cos(ϕ_T) relative to the loads they are meant to represent. Because of the reduced vertical loading, the vehicle can rise on its compliant tyres and suspensions relative to its normal ride height, resulting in a higher centre of gravity position and, possibly, an unrealistically *low* estimate of the steady-state roll stability limit. At the same time, steady-state lateral loading is also reduced by the factor cos(ϕ_T). This could result in compliant lateral and roll motions of the vehicle that are unrepresentatively small, tending to produce an unrealistically *high* estimate of the steady-state roll stability limit. The fact that these two influences tend to cancel each other out is clearly advantageous. More importantly, for the moderate tilt angles required to test heavy vehicles, cos(ϕ_T) remains sufficiently near to unity such that accurate representations of all loadings are maintained.

A second error source in this physical simulation methodology involves the *distribution* of lateral forces among the tyres of the several axles of the vehicle. Lateral forces developed at the tyre-road interface must, of course, satisfy the requirements of static equilibrium of lateral force and yaw moments acting on the vehicle. For many heavy vehicles, however, the presence of multi-axle suspensions implies that the distribution of lateral forces is statically indeterminate. Thus, the distribution of lateral reaction forces depends in part on the lateral compliance properties of the tyres and suspensions. The compliance properties that are in play while the vehicle is undergoing a tilt-table test are not precisely those that are in play while the vehicle is in motion on the road. The significance of this error source is dependent on axle location (longitudinal), and the similarity, or lack thereof, of geometry among the redundant axles and suspensions.

A third error source lies in the side slip angle of the tractor and the yaw articulation geometry of the vehicle. Although tilt-table experiments are typically conducted with these two yaw-plane angles at zero, the negotiation of real turns at significant speed generally implies the existence of small, non-zero yaw-plane angles. Some reflection on this matter reveals that, in real practice, steady-state rollover threshold — as measured by lateral acceleration — varies slightly as a function of turn radius, since turn radius, in part, establishes these angles. In this light, the condition of zero yaw angle is simply seen as one of many possible test conditions — certainly the one most easily implemented.

B.2 Practical sources of error

B.2.1 General

Beyond the normal issues of instrumentation error, etc., the tilt-table test is subject to certain practical sources of error, some of which will be briefly discussed here.

B.2.2 Planar quality of the table surface

From Equation (1), the TTR is the tangent of the tilt angle. Tilt angle is defined as the angle between the horizontal and a vector in the plane of the tilt-table surface that is perpendicular to the tilt axis. However, in practice the surface of the tilt-table is not a perfect plane. That is, the tyre-contact surfaces supporting all of the tyres of the vehicle are not perfectly coplanar. The “local” tilt angle at each of the several axles of the vehicle can differ from one to another.

© ISO 2011 – All rights reserved

Copyright International Organization for Standardization
Provided by IHS under license with ISO
No reproduction or networking permitted without license from IHS
Not for Resale

Tilt-tables are typically not sufficiently rigid along their entire length to ensure that the tilt angles in the vicinity of each axle are identical. Tilt-table facilities are typically either a single large table able to accommodate the entire vehicle, or a set of coordinated, small tables. In both cases, it is most typical that the consistency of tilt angle at the several axles of the vehicle depends on the coordination of the action of several individual lifting devices. Uncertainties in the determination of tilt angle on the order of 0,05° imply uncertainties in simulated lateral acceleration on the order of 0,01 m/s^2.

Surface roughness may contribute to differences between effective tilt angles at the several axles of the vehicle. The surface of a tilt-table may be made from wood planks or structural quality steel members, neither of which are likely to be particularly smooth or highly planar. Recognising that the track of an axle using dual tyres is nominally 2 m, surface “roughness” of the order of 2 mm may imply uncertainty in the determination of simulated lateral acceleration on the order of 0,01 m/s^2.

Alignment of the hinges forming the tilt axis can affect the planar quality of the table surface. Especially for individual tables that each have their own hinges, but also for large tables with several distributed hinges, it is necessary for all local tilt axes to lie on a common line if the planar quality of the table surface is to remain consistent throughout a tilt test.

B.2.3 Surface friction and trip rails

It is desirable that the surface of the tilt-table provide a tyre-friction coefficient that exceeds the steady-state rollover threshold (in gravitational units). When this is the case, tyre friction is adequate to prevent the vehicle from sliding sideways on the table at the maximum tilt angle required to complete the test. Special surface treatments may be desirable to achieve high levels of tyre friction. Some of these could influence the results of the test.

For the more stable heavy vehicles, achieving the desired high level of tyre friction might not be possible. In such cases, trip rail(s) may be required to prevent the vehicle from sliding. The use of trip rails can also be expected to influence the results of the test.

The height of the centre of gravity *above the ground* is a key parameter in determining the actual steady-state rollover threshold of any vehicle. “The ground” is the appropriate reference for the height of the centre of gravity because it is at the interface between tyre and ground where external lateral forces are applied to the vehicle. Certain surface treatments used to enhance tyre friction or the use of a trip rail may influence the results of the tilt-table test because they may alter the height at which external lateral forces are applied to the vehicle, effectively altering the “height” of the centre of gravity.

New, clean, adhesive-backed sandpaper applied to the surface of the tilt-table can provided a tyre-friction coefficient in the range of 0,8 with no significant influence on test results. Effective friction coefficients greater than 1,0 can be achieved by applying standard (not flattened) expanded metal to the surface of the tilt-table at the location of the low-side tyres. However, the use of expanded metal may introduce uncertainty with respect to the vertical position of the effective tyre-surface interface that is on the order of a few millimetres (see Figure B.1). This uncertainty can influence the results of the test.

When tyre friction is not adequate to prevent the vehicle from sliding, trip rails located immediately beside and in contact with the tyre are used to prevent the vehicle from sliding. When trip rails are used, some portion of the external lateral force is applied to the vehicle at the tyre-surface interface, but the remaining portion is applied on the vertical surface of the trip rail at some height above the table surface. Thus, the centroid of lateral force will lie above the table surface and the results of the tilt-table test will be influenced accordingly.

Copyright International Organization for Standardization
Provided by IHS under license with ISO
No reproduction or networking permitted without license from IHS
Not for Resale
© ISO 2011 – All rights reserved

Dimensions in millimetres

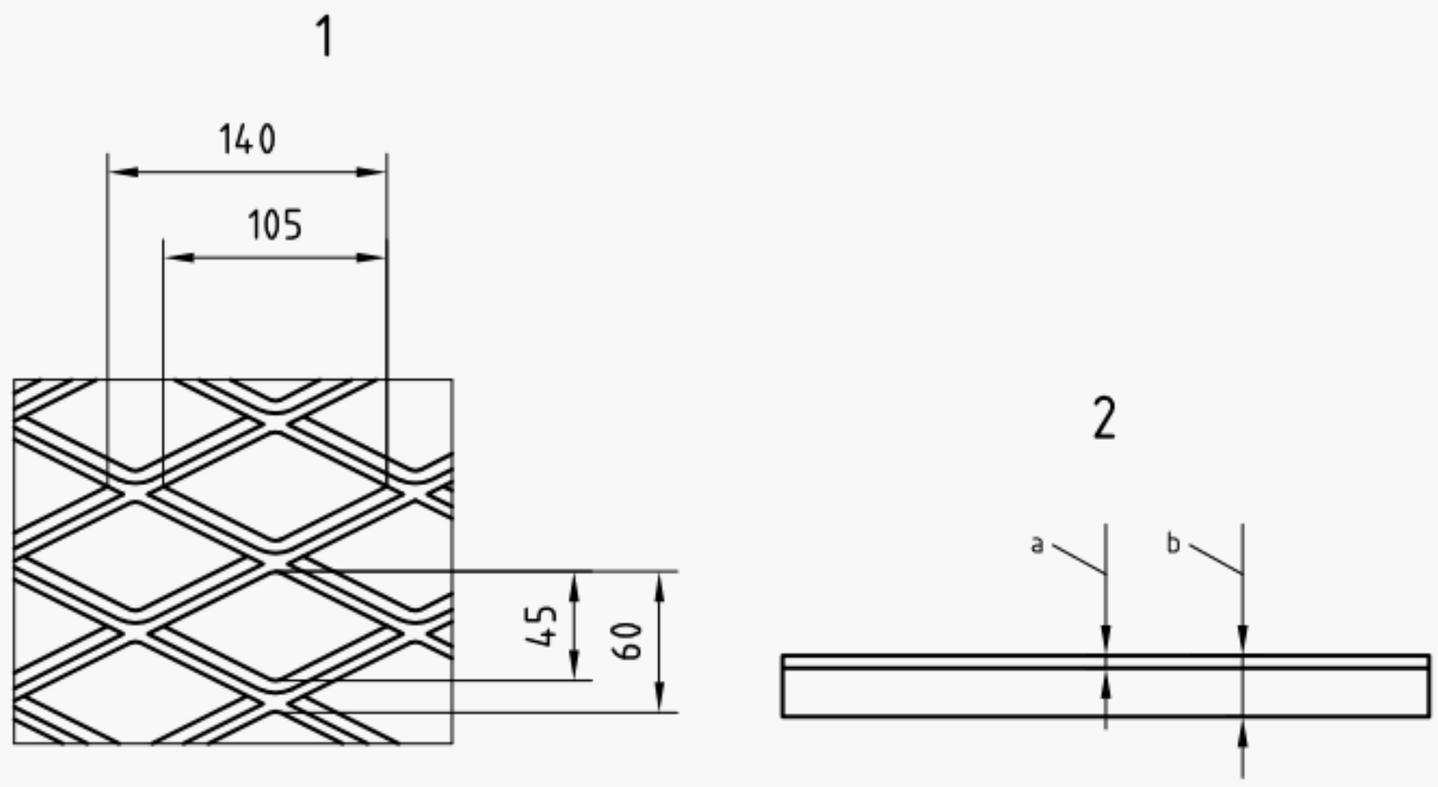

Lateral friction	
Fz kN	**Range of measured friction coefficient**
27,0	1,14 to 1,07
35,6	1,14 to 1,01
39,9	1,02 to 1,02

Key

1 expanded metal sample

2 vertical support

a Effective plane of tyre-surface interface: 2 mm.

b Material thickness: 7 mm.

Figure B.1 — Properties of a standing 11R22.5 G truck tyre on expanded metal

B.2.4 Height-regulating suspensions

Many heavy vehicles use height-regulating suspensions. The large majority of these are air-spring suspension, wherein the height-regulating function is accomplished by inflating or deflating the air springs. Typically, inflating/deflating takes place at very low rates, as such systems are intended only to compensate for changes in static loading conditions, but not for dynamic changes in suspension loading that occur while the vehicle is manoeuvring. A few heavy vehicles have height-regulating suspensions that use other mechanisms to adjust ride height; some are intended to react rapidly enough to respond to dynamic changes in load.

Properly conducted, the tilt-table test takes place slowly enough such that typical height-regulating air-suspensions have adequate time to significantly alter the inflation state of the air springs. Such changes are not likely to be representative of suspension behaviour during real manoeuvring and could influence the results of the test inappropriately. Thus, during tilt-table tests, it is often appropriate to disable the automatic valves that regulate suspension height. (In these cases, suspension height, i.e. air-spring inflation, must be adjusted properly by other means prior to the test.) In some cases, however, e.g. when the regulating system has a relatively fast response, it can be appropriate to allow height-regulating systems to remain active during the tilt-table test.

© ISO 2011 – All rights reserved

Copyright International Organization for Standardization
Provided by IHS under license with ISO
No reproduction or networking permitted without license from IHS
Not for Resale

B.2.5 Tilt rate

The tilt-table test is intended to be a progressive transition of steady-state conditions (i.e. quasi-steady state) characterized by ever-increasing lateral acceleration up to the point of rollover. This “point of rollover” can be described as the tilt condition at which the vehicle is just “balanced” on its low-side tyres. The roll response of the vehicle as it passes through this balanced state and, subsequently, lifts its high-side tyres from the table surface can be extremely slow. Likewise, the roll response of the vehicle at other events of interest during the test can also be very slow. If the tilt rate of the table is too fast, the table could, in effect, “chase” the vehicle, delaying the lift-off of the high-side tyres inappropriately. It is necessary that the tilt rate of the table be slow enough to avoid this potential influence on test results. Indeed, it is often appropriate to stop the tilt rate altogether while the vehicle responds to a “discontinuity” (such as wheel lift or fifth-wheel lash) to allow the vehicle time to establish its new equilibrium state.

© ISO 2011 – All rights reserved
Copyright International Organization for Standardization
Provided by IHS under license with ISO
No reproduction or networking permitted without license from IHS
Not for Resale

--`,,```,,,,````-`-`,,`,,`,`,,`---

Copyright International Organization for Standardization
Provided by IHS under license with ISO
No reproduction or networking permitted without license from IHS

Not for Resale

ICS 43.080.01

Price based on 16 pages

© ISO 2011 – All rights reserved
Copyright International Organization for Standardization
Provided by IHS under license with ISO
No reproduction or networking permitted without license from IHS
Not for Resale