INTERNATIONAL STANDARD

ISO 15818

First edition
2017-03

Earth-moving machinery — Lifting and tying-down attachment points — Performance requirements

Engins de terrassement — Points d'ancrage pour le levage et l'arrimage — Exigences de performance

Reference number
ISO 15818:2017(E)

© ISO 2017

COPYRIGHT PROTECTED DOCUMENT

© ISO 2017, Published in Switzerland

All rights reserved. Unless otherwise specified, no part of this publication may be reproduced or utilized otherwise in any form or by any means, electronic or mechanical, including photocopying, or posting on the internet or an intranet, without prior written permission. Permission can be requested from either ISO at the address below or ISO's member body in the country of the requester.

ISO copyright office
Ch. de Blandonnet 8 • CP 401
CH-1214 Vernier, Geneva, Switzerland
Tel. +41 22 749 01 11
Fax +41 22 749 09 47
copyright@iso.org
www.iso.org

Contents

Page

Foreword ... **iv**
Introduction ... **v**
1 Scope ... **1**
2 Normative references ... **1**
3 Terms and definitions ... **1**
4 Lifting attachment points ... **4**
4.1 Location and number ... 4
4.2 Strength ... 4
5 Tying-down attachment points ... **6**
5.1 Location and number ... 6
5.2 Acceleration coefficient ... 6
5.3 Strength ... 7
6 Attachment points — Common requirements ... **9**
6.1 Common locational requirements ... 9
6.2 Material requirements ... 10
6.3 Pull-pin type devices ... 10
6.4 Common devices ... 10
7 Identification ... **10**
8 Lifting and tying-down instructions ... **11**
9 Verification ... **12**
Annex A (normative) **Lifting and tying-down information for disassembled machines** ... **13**
Annex B (informative) **Lifting, loading, tying down and transporting earth-moving machinery — Methods and recommendations** ... **14**
Annex C (informative) **Method for calculation of forces on tying-down attachment points in diagonal lashing disposition** ... **19**
Bibliography ... **20**

© ISO 2017 – All rights reserved

Foreword

ISO (the International Organization for Standardization) is a worldwide federation of national standards bodies (ISO member bodies). The work of preparing International Standards is normally carried out through ISO technical committees. Each member body interested in a subject for which a technical committee has been established has the right to be represented on that committee. International organizations, governmental and non-governmental, in liaison with ISO, also take part in the work. ISO collaborates closely with the International Electrotechnical Commission (IEC) on all matters of electrotechnical standardization.

The procedures used to develop this document and those intended for its further maintenance are described in the ISO/IEC Directives, Part 1. In particular the different approval criteria needed for the different types of ISO documents should be noted. This document was drafted in accordance with the editorial rules of the ISO/IEC Directives, Part 2 (see www.iso.org/directives).

Attention is drawn to the possibility that some of the elements of this document may be the subject of patent rights. ISO shall not be held responsible for identifying any or all such patent rights. Details of any patent rights identified during the development of the document will be in the Introduction and/or on the ISO list of patent declarations received (see www.iso.org/patents).

Any trade name used in this document is information given for the convenience of users and does not constitute an endorsement.

For an explanation on the voluntary nature of standards, the meaning of ISO specific terms and expressions related to conformity assessment, as well as information about ISO's adherence to the World Trade Organization (WTO) principles in the Technical Barriers to Trade (TBT) see the following URL: www.iso.org/iso/foreword.html

This document was prepared by Technical Committee ISO/TC 127, *Earth-moving machinery*, Subcommittee SC 3, *Machine characteristics, electrical and electronic systems, operation and maintenance*.

© ISO 2017 – All rights reserved

Introduction

This document has been developed to define the performance requirements of lifting and tying-down attachment points fitted on, or incorporated into, earth-moving machinery for the purposes of its effective and safe transportation.

Although manufacturers of machines do not have direct responsibility for such transportation, the method and precautions necessary for lifting, tying down and disassembling for transportation are described in informative annexes which can be used by the manufacturer as guidance when preparing the operator's manual.

The tying-down requirements and recommendations given in this document are intended to match with widely applied practices such as those described in IMO/ILO/UNECE guidelines. However, where this is not the case, another or other supplemental methods for securing the machine can be provided in the operator's manual.

© ISO 2017 – All rights reserved

Earth-moving machinery — Lifting and tying-down attachment points — Performance requirements

1 Scope

This document specifies the performance requirements for the lifting and tying-down attachment points of earth-moving machinery as defined in ISO 6165.

This document also applies to components and subassemblies of earth-moving machinery which the manufacturer intends to be lifted or tied down separately by using lifting or tying-down attachment points.

NOTE 1 Some components (e.g. tyres, tyres with wheels, track shoe assemblies, hydraulic cylinders) can be securely tied down without specific tying-down attachment points.

This document applies to the following modes of transport:

— lifting with cranes (e.g. mobile cranes, gantry cranes);

— road transport (e.g. truck, trailer);

— rail transport, including combined transport (e.g. wagons with containers, swap-bodies, semi-trailers, trucks);

— sea transport.

It is not applicable to

— airlift or transport by air, or

— rail transport of machines on wagons subject to shunting.

NOTE 2 National or local regulations can be more stringent.

This document does not include requirements for attaching the machine to a platform of the rail car, boat, etc., from which the machine is intended to work.

2 Normative references

The following documents, in whole or in part, are normatively referenced in this document and are indispensable for its application. For dated references, only the edition cited applies. For undated references, the latest edition of the referenced document (including any amendments) applies.

ISO 2867, *Earth-moving machinery — Access systems*

ISO 6165, *Earth-moving machinery — Basic types — Identification and terms and definitions*

ISO 6405-1, *Earth-moving machinery — Symbols for operator controls and other displays — Part 1: Common symbols*

ISO 7000, *Graphical symbols for use on equipment — Registered symbols*

3 Terms and definitions

For the purposes of this document, the terms and definitions given in ISO 6165 and the following apply.

© ISO 2017 – All rights reserved

3.1
lifting attachment point
device fitted on, or incorporated into, an earth-moving machine, used for lifting the machine or disassembled unit

Note 1 to entry: The attachment point can be a hole, a lifting eye or any specific part of the machine as specified by the manufacturer.

3.2
lifting accessory
combination of materials (e.g. shackles, wire ropes, slings, chains) used for lifting the machine or disassembled unit

3.3
tying-down attachment point
device fitted on, or incorporated into, an earth-moving machine, used for tying down when transporting the machine or disassembled unit

Note 1 to entry: The attachment point can be a hole, a tying-down eye or any specific part of the machine as specified by the manufacturer.

3.4
tying-down accessory
combination of materials (e.g. chains, wire ropes, shackles, bracing, wheel chocks) used for tying down and fastening when transporting a machine or disassembled unit

3.5
sling
assembly of slinging components, such as chains, wire ropes or textile material joined to upper or lower terminals, suitable for attaching to a *lifting attachment point* (3.1)

3.6
machine lifting configuration
manufacturer's recommended position of the machine for lifting

3.7
machine tying-down configuration
manufacturer's recommended position of the machine for transport

3.8 Masses for calculation

3.8.1
mass of each disassembled unit
mass of each unit of a machine (e.g. component, subassembly, base machine) that is disassembled for transport

Note 1 to entry: It is used for calculating forces exerted on *lifting attachment points* (3.1) or *tying-down attachment points* (3.3) of the unit.

3.8.2
whole machine mass for calculation
mass of the machine, including the heaviest combination of cab, canopy, operator-protective structures, if any, with all their components and mountings, and any combination of equipment and attachment approved by the manufacturer of the machine, including full-liquid systems excluding payloads

Note 1 to entry: It is used for calculating forces exerted on *lifting attachment points* (3.1) or *tying-down attachment points* (3.3) of the whole machine.

© ISO 2017 – All rights reserved

3.9
distributed lifting force
force applied onto each *lifting attachment point* (3.1) from lifting equipment through *lifting accessories* (3.2) during lifting

Note 1 to entry: The distributed lifting force magnitude and direction can be different for each lifting attachment point due to unequal distribution of loads and non-vertical lifting accessories.

3.10
distributed tying-down force
restraining force
force potentially applied onto each *tying-down attachment point* (3.3) from transport vehicle through *tying-down accessories* (3.4) during transport

3.11
working load limit
WLL
maximum load (mass) that the *lifting accessory* (3.2) is designed to lift under the conditions specified by the manufacturer

3.12
lashing capacity
LC
maximum allowable direct force that a *tying-down accessory* (3.4) can sustain in use

3.13
transport vehicle
vehicle to which the earth-moving machine is tied down for transportation purposes

3.14
proof force
calculated force including proof factor for *distributed lifting force* (3.9) or *distributed tying-down force* (3.10)

3.15
breaking force
calculated force including safety factor for *distributed lifting force* (3.9) or *distributed tying-down force* (3.10)

3.16
number of effective tying-down attachment points
n
number of *tying-down attachment points* (3.3) used simultaneously in the same direction of force

3.17
number of effective lifting attachment points
n
number of *lifting attachment points* (3.1) used simultaneously

3.18
lashing
restraining (as cargo) of earth-moving machine movement in relation to the *transport vehicle* (3.13) against forces applied on the machine during transport by means of the appropriate use of *tying-down accessories* (3.4)

3.19
resultant force
F_{Rx}, F_{Ry}
force acting on *the tying-down attachment point* (3.3) due to the direction of force relative to the *transport vehicle* (3.13) actuated on the load in either the x- or y- direction during transport

© ISO 2017 – All rights reserved

4 Lifting attachment points

4.1 Location and number

Sufficient number of lifting attachment points shall be placed so that the lifting force derived from the machine mass is relatively well distributed and balanced during lifting with a lifting accessory or accessories.

Where there is no appropriate central lifting attachment point (see Figure B.2), lifting attachment points shall be spaced the maximum practical distance for appropriate stability and balance.

A lifting attachment point or points should be designed to hold the terminal fittings of the lifting accessories in the foreseen position to avoid slipping.

4.2 Strength

Dependent on transport procedure, the lifting attachment points shall fulfil the strength requirements to lift the whole machine or to lift the disassembled unit. Table 1 shall be used to define strength requirements for symmetric loadings.

Alternatively, taking uneven loadings into account, the strength requirement for each lifting attachment point shall be calculated individually using the mass of each disassembled unit or (3.8.1) the whole machine mass for calculation (3.8.2) and the location of the lifting points relative to the centre of the mass. A proof factor of 1,5 for the proof force and a safety factor of 4 for the breaking force shall be used in the calculations.

The strength of each lifting point shall be verified according to Clause 9.

Open-end lifting attachment points, such as hooks, shall have a safety latch or other device to prevent unintended disengagement of the mating lifting accessory.

© ISO 2017 – All rights reserved

Table 1 — Lifting attachment points — Strength requirements — Symmetric loadings

Distributed lifting force N	Strength requirement	
	Proof force N	Breaking force N
$\frac{m \times g}{n \times \cos\theta}$	$\frac{m \times g \times 1{,}5}{n \times \cos\theta}$	$\frac{m \times g \times 4{,}0}{n \times \cos\theta}$

m is the whole machine mass for calculation or mass of each disassembled unit (kg)

g is the acceleration due to the force of gravity (g = 9,8 m/s^2)

n is the number of effective lifting attachment points, for calculation of symmetric loadings as defined below:

1 with one lifting attachment point and 2 with two lifting attachment points that are symmetrically located about the centre of the machine mass, with equal chain lengths and angles;

2 with four or more lifting attachment points that are symmetrically located about the centre of the machine mass, with equal chain lengths and angles for rigid load;

3 with three lifting attachment points that are symmetrically located about the centre of the machine mass, with equal chain lengths and angles;

3 with four lifting attachment points that are symmetrically located about the centre of the machine mass, with equal chain lengths and angles for non-rigid load;

4 with four lifting attachment points that are symmetrically located about the centre of the machine mass, with equal chain lengths and angles for the case where adequate load balancing is ensured for non-rigid load (e.g. frame oscillation, axle oscillation, lifting accessories with balancing capability).

θ is the angle between the vertical line and the sling leg at the lifting attachment point (see Figure 1). It is generally limited to prevent damage to the machine, for example, operator station, engine cover. The angle used for calculation shall be 60° or the maximum possible angle needed to prevent the machine from being damaged by the lifting devices as determined by the manufacturer. For single-leg slings, the lift angle is equal to 0°.

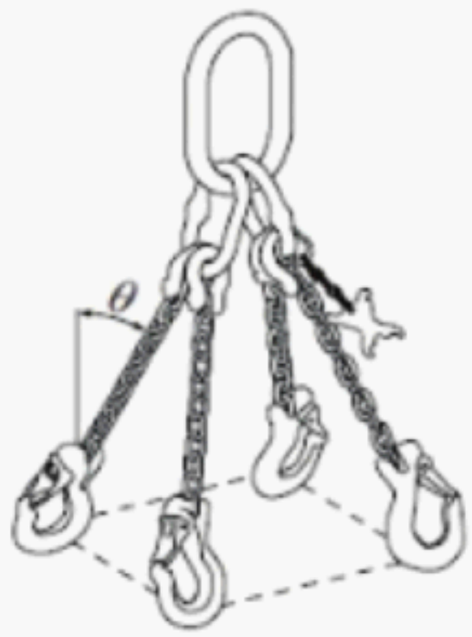

Figure 1 — Lifting attachment points — Angle between vertical line and sling leg

© ISO 2017 – All rights reserved

5 Tying-down attachment points

5.1 Location and number

The tying-down attachment points shall be positioned so that damage to the tying-down accessory is avoided when the points are used according to the manufacturer's instructions. See Figure 2.

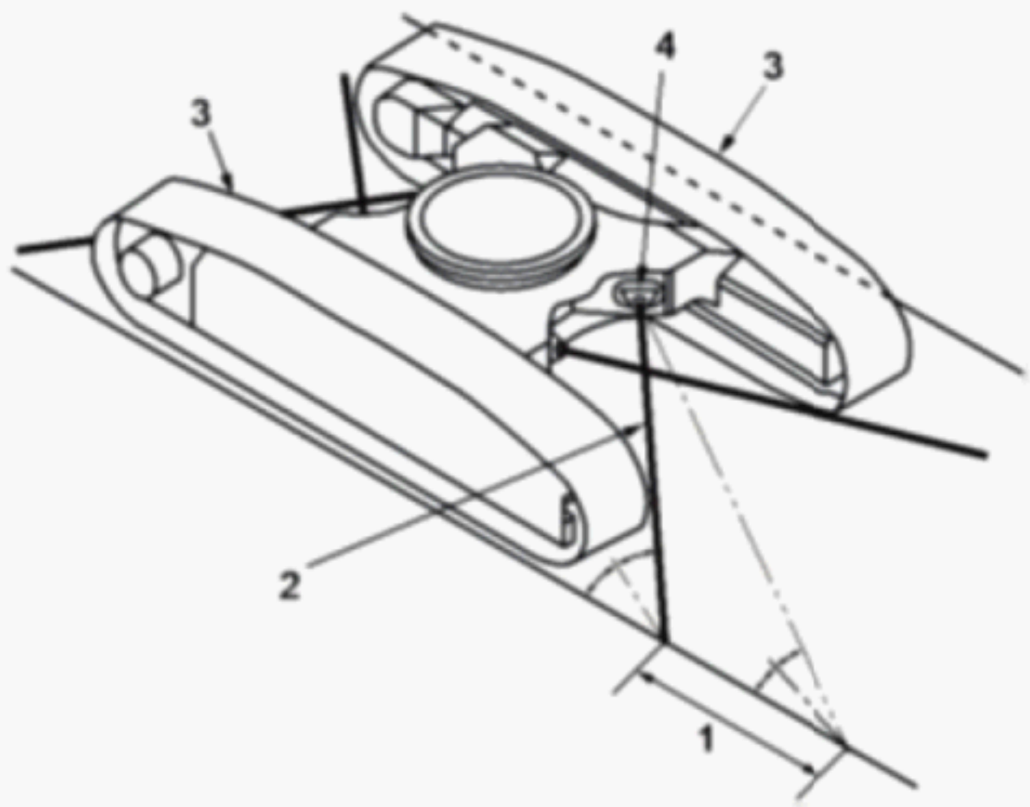

Key

1 range to keep appropriate angle

2 tying-down accessory (within the range to keep appropriate angle to prevent damage to the accessory)

3 track of the machine

4 tying-down attachment point

Figure 2 — Tying-down attachment points — Appropriate angle range

A sufficient number of tying-down attachment points shall be provided to allow acceptable distributed tying-down forces for tying-down accessories.

If a tying-down point is used in the calculation of n in both the longitudinal and lateral directions, it shall have the required strength for both longitudinal and transverse loads. However, the tying-down point does not need to meet the requirement in both directions simultaneously.

5.2 Acceleration coefficient

The acceleration coefficients for the specific type of transportation (road, rail and sea) are defined in Tables 2, 3 and 4. These coefficients specify the maximum forces on a machine for calculating strength requirements as specified in 5.3.

NOTE Tables 2, 3 and 4 values are taken from Reference [3].

 © ISO 2017 – All rights reserved

Table 2 — Acceleration coefficient during road transport

Securing in	Acceleration coefficients		
	C_x longitudinally	C_y transversely	C_z vertically down
longitudinal direction	0,8	—	1,0
transverse direction	—	0,5	1,0

Table 3 — Acceleration coefficient during rail transport

Securing in	Acceleration coefficients		
	C_x longitudinally	C_y transversely	C_z vertically down
longitudinal direction	1,0	—	1,0
transverse direction	—	0,5	0,7

Table 4 — Acceleration coefficient during maritime transport

Securing in	Acceleration coefficients		
	C_x longitudinally	C_y transversely	C_z vertically down
longitudinal direction	0,4	—	0,2
transverse direction	—	0,8	1,0

5.3 Strength

Each tying-down attachment point shall fulfil the strength requirements of either 5.3.1 or 5.3.2 as applicable for the modes of transportation (road, rail or sea) and shall be verified in accordance with Clause 9.

5.3.1 When the number of effective tying-down attachment points n is 2 or less, each tying-down attachment point shall fulfil the strength requirements of Table 5.

© ISO 2017 – All rights reserved

Table 5 — Tying-down attachment points — Strength requirements

Direction of force relative to transport vehicle	Resultant force N	Strength requirement	
		Proof force N	Breaking force N
Longitudinal direction	$F_{Rx} = \frac{(C_x - \mu_D \times C_z) \times m \times g}{n \times (\cos\alpha \times \cos\beta_x + \mu_D \times \sin\alpha)}$	$1{,}25 \times F_{Rx}$	$2 \times F_{Rx}$
Transverse direction	$F_{Ry} = \frac{(C_y - \mu_D \times C_z) \times m \times g}{n \times (\cos\alpha \times \cos\beta_y + \mu_D \times \sin\alpha)}$	$1{,}25 \times F_{Ry}$	$2 \times F_{Ry}$

m is the machine mass for calculation or mass of each disassembled unit (kg)

g is the acceleration due to the force of gravity (g = 9,8 m/s^2)

n is the number of effective tying-down attachment points, used simultaneously for each direction with a maximum of 2 for the calculation using this table

α is the angle between a horizontal plane and the tying-down accessory at the tying-down attachment point

It is recommended that the machine manufacturer indicate in the operator's manual that the angle alpha not be negative.

β_x is the angle between the longitudinal axis and the tying-down accessory at the tying-down attachment point in the loading plane of the transport vehicle

β_y is the angle between the lateral axis and the tying-down accessory at the tying-down attachment point in the loading plane of the transport vehicle, where $\beta_y = 90° - \beta_x$

μ_D is the dynamic friction coefficient for design (μ_D = 0,2 reference value)

F_{Rx} is the resultant force actuated by the load acting on each effective tying-down attachment point in the longitudinal direction

F_{Ry} is the resultant force actuated by the load acting on each effective tying-down attachment point in the transverse (lateral) direction

C_x is the longitudinal direction acceleration coefficient

C_y is the transverse (lateral) direction acceleration coefficient

C_z is the vertical acceleration coefficient

C_x, C_y and C_z multiplied by the acceleration due to gravity, g, gives the acceleration, $a = C \times g$, of the load

For larger machines, or if one or more specific tying-down attachment points would not withstand the required force, another supplemental method or methods (such as blocking of sufficient strength) to secure the machine shall be indicated in the operator's manual. Alternatively, if guaranteed by the manufacturer and indicated in the operator's manual, and if given as part of a machine tying-down configuration requirement, the friction coefficient may be increased by using special materials, for example, strap rubber, between the machine and the transport vehicle surface (see, for example, EN 12195-1:2003, Table B.1).

If the friction coefficient is different from the reference value (0,2), it shall be ensured by the earth-moving machine manufacturer and indicated in the operator's manual. If the parking brake capacity (see ISO 3450 or ISO 10265) is less than friction effort, friction for calculation shall be replaced by the parking brake capacity. Or the manufacturer shall indicate alternative restraining method(s) within the operator's manual and load securing dockets (see 8.4).

The earth-moving machine might not be oriented in the same direction as the transport vehicle and could have more than one possible orientation relative to that vehicle. Moreover, the machine manufacturer in general cannot decide angles. Therefore, it is recommended that in each tying-down case for design and verification certain appropriate angle ranges are specified, together with a warning in the operator's manual indicating that this geometric information range is the maximum.

Effects of using chocks may be incorporated for calculation purposes. In such cases, use of chocks shall be indicated in the operator's manual and, if used, in the load securing docket (see 8.4).

© ISO 2017 – All rights reserved

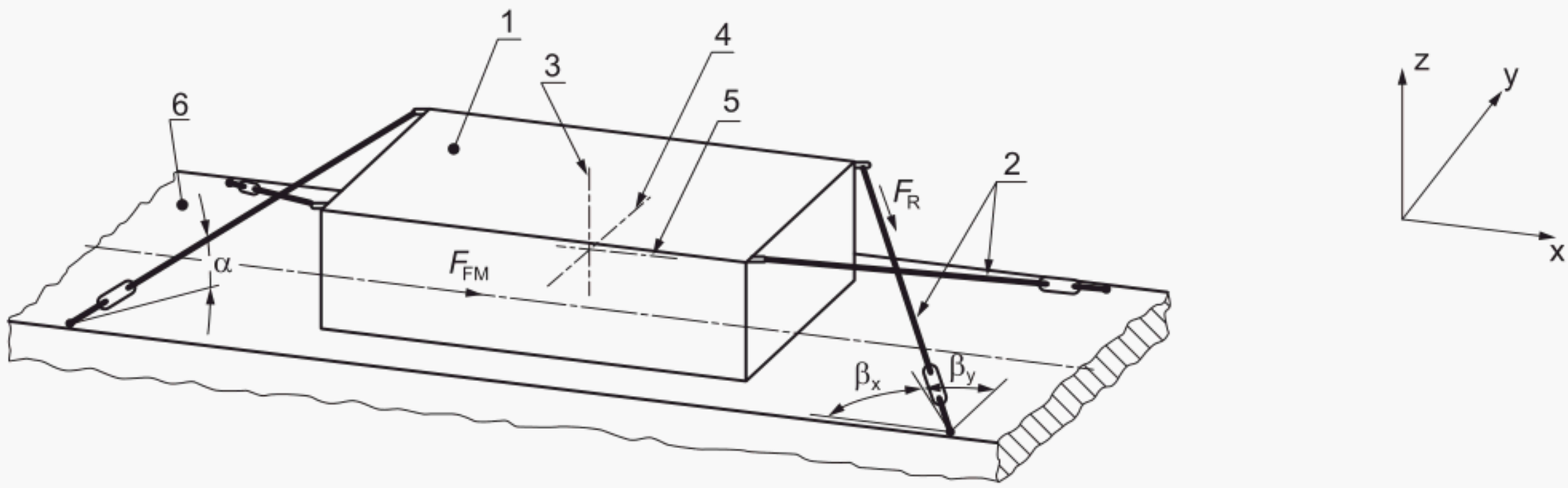

Key

1 load
2 lashing
3 vertical axis
4 lateral axis
5 longitudinal axis
6 loading plane
F_R restraining force of lashing
F_{FM} friction force as result of vertical force F_Z

NOTE See Table 5 and Annex C for symbol definitions.

Figure 3 — Tying down the machine

5.3.2 The restraining force of common lashing means and transport vehicles are limited. If the calculated restraining force with n = 2 exceeds the capability of the restraint system for manually workable size restraints, additional measures are required:

— more restraining points, $n > 2$;

— increase the friction coefficient (e.g. friction mats);

— blocking (e.g. chocks).

If more than two tying-down attachment points for any single direction are provided, the distributed tying-down force at each tying-down attachment point shall be evaluated individually taking into account the elastic deformation of the tying-down accessories and other system restraints (e.g. friction mats, blocking). To fulfil the strength requirements of this document, the calculated distributed tying-down force shall be multiplied by a factor of 1,25 for the proof force and a factor of 2,0 for the breaking force.

NOTE Annex C provides a road, rail and sea transportation calculation method for diagonal lashing.

6 Attachment points — Common requirements

6.1 Common locational requirements

Lifting and tying-down attachment points should be accessible using the principles given in ISO 2867. If access is needed, it may be achieved by external access systems (e.g. portable working platform).

There shall be enough space around the lifting and tying-down attachment points for fixing of the corresponding (lifting/tying-down) accessories.

© ISO 2017 – All rights reserved

The lifting and tying-down attachment points shall be so located that damage of the corresponding (lifting/tying-down) accessories due to sharp edges, etc., is avoided when the machine is lifted/tied-down according to the manufacturer's instructions.

Each lifting and tying-down attachment point shall be so located to avoid contact between the corresponding (lifting/tying-down) accessory and the machine (except at the attachment point). If this is not possible, a specific procedure for lifting/tying down shall be described in the operator's manual and on the machine (e.g. spreader bar for lifting and appropriate edge protectors for tying down).

The dimensions of lifting and tying-down attachment points, such as holes, should be appropriate for the appropriate corresponding (lifting/tying-down) accessories.

If a machine structural member is used as a lifting or tying-down attachment point, the method for fixing the corresponding (lifting/tying-down) accessories at the structural member shall be described in the operator's manual.

6.2 Material requirements

Lifting and tying-down attachment points shall be made of materials that display visible signs of permanent deformation (yield) or other equivalent visible signs before failure (fracture) so that it is apparent that the point has been overloaded.

6.3 Pull-pin type devices

If pull-pin type devices are used as lifting or tying-down attachment points, provisions shall be made to retain the pin in place during use and to provide a means of retention or storage when not in use.

6.4 Common devices

If an attachment point is used both for lifting and tying down, it shall fulfil the strength requirements as specified by both 4.2 and 5.3 but the forces need not be evaluated simultaneously.

7 Identification

7.1 Whole machine lifting attachment points shall be identified adjacent to the points using the symbol ISO 7000-1368 and in accordance with ISO 6405-1. The symbol should be of a contrasting colour to that of the machine.

7.2 Whole machine tying-down attachment points shall be identified adjacent to the points using the symbol ISO 7000-2069 and in accordance with ISO 6405-1. The symbol should be of a contrasting colour to that of the machine.

7.3 Lifting and tying-down attachment points should be clearly described with text and figures in the operator's manual.

7.4 Maximum machine mass should be indicated on the machine at a readily visible location [e.g. on the PIN (ISO 10261) plate or on the instruction label].

7.5 Lifting attachment points and tying-down attachment of components or subassemblies, which are not intended for the lifting or tying down of the whole machine, shall not be marked in accordance with 7.1 and 7.2, and these points shall be clearly described with text and figures in the manufacturer's instructions (e.g. operator's manual, service manual, field assembly instruction).

© ISO 2017 – All rights reserved

8 Lifting and tying-down instructions

8.1 The machine manufacturer shall provide instructions in the operator's manual for the lifting, tying down and transportation of the earth-moving machinery.

EXAMPLE Machine tying down and lifting configuration.

See Annex B.

NOTE A transport professional, as the expert in how the machine is tied-down to the particular transport vehicle, has the flexibility to use a method other than manufacturer's instructions if it does not conflict with the basic requirements of this document.

It is recommended that the machine manufacturer provides information to prevent the machine from being damaged by the lifting accessories. Manufacturers should inform the machine user not to use an angle θ (see Figure 1) greater than 60°. The machine manufacturer should also provide instructions for lifting and tying down, preferably presented in a single sticker (or grouped), visible from outside the machine. An example is given in Figure 4.

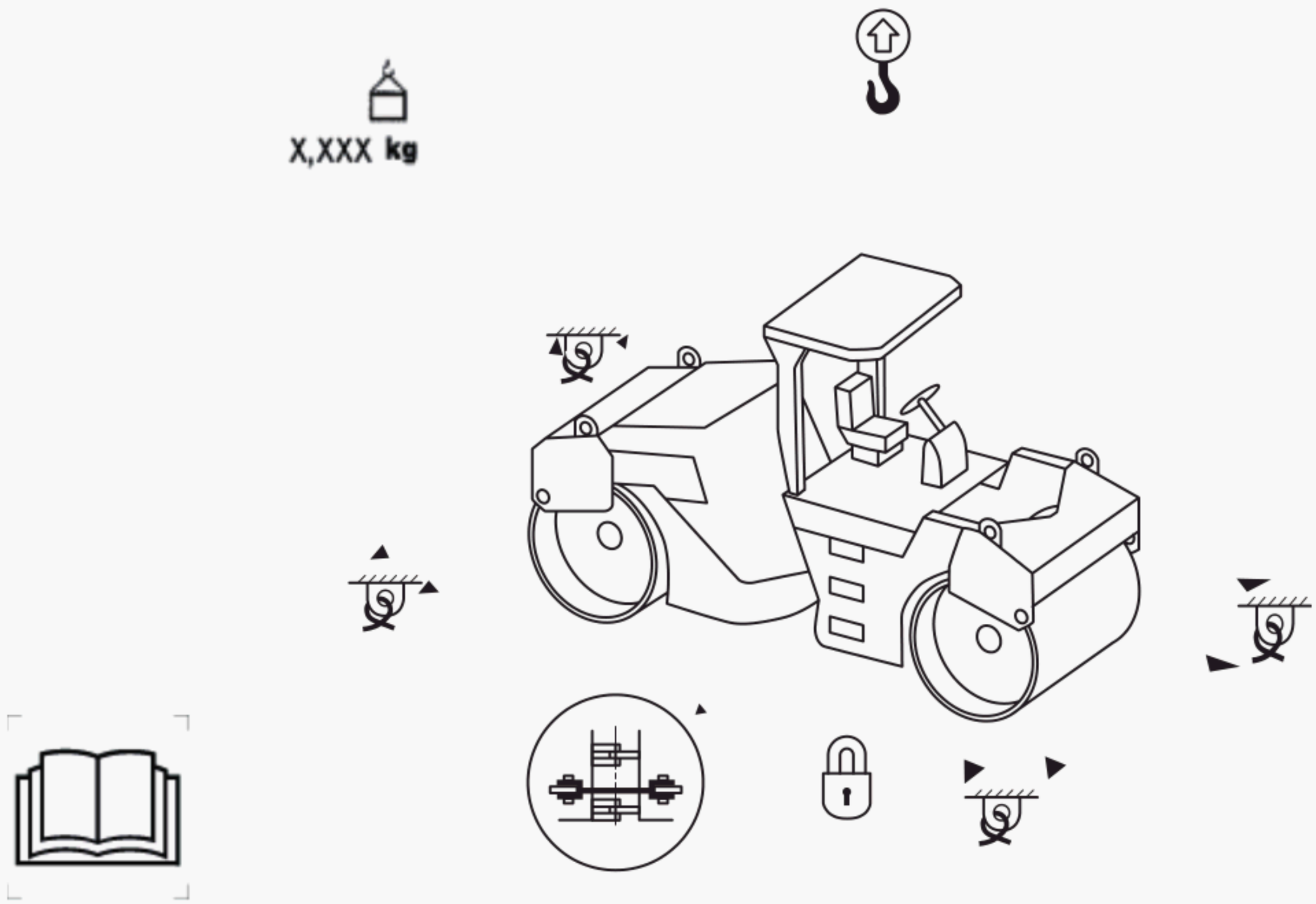

Figure 4 — Lifting and tying-down instructions

The machine manufacturer shall also indicate additional measures, if required, for example, spreader bars, chocks, friction materials and their use.

Information shall be provided to the effect that the loading area and shipping platform and contact areas on the machine are to be clean, free from ice, snow and other slippery materials.

The operator's manual may also provide additional specific tying-down instruction appropriate to regional, national or local conditions.

© ISO 2017 – All rights reserved

8.2 If an earth-moving machine is intended to be disassembled for transportation or lifting purposes by the machine user, the mass of each disassembled unit shall be provided in the operator's manual or in a separate document provided by the manufacturer. See Annex A.

8.3 The operator's manual shall indicate the acceptable range of lifting accessory angles. The operator's manual shall indicate the acceptable range of tying-down accessory angles. The operator's manual shall also indicate the calculated maximum distributed tying-down force of each tying-down attachment point for the acceptable range of tying-down accessory angles. The operator's manual should include appropriate recommendations for lifting or tying-down accessories so that they are of the correct working load limit or lashing capacity in relation to the whole machine mass for calculation (3.8.2) and of mass of each disassembled unit (3.8.1).

NOTE Including indication of the minimum length of the lifting or tying-down accessories (wire, ropes, chains slings and the like), satisfying the requirement of maximum angle (refer to applicable figures) according to the specific arrangement of the machine lifting or tying-down points into the operator's manual possibly provides more communication to the final user.

If lifting or tying down the machine is foreseen with the operator's station locked and with the operator's manual unavailable to the lifting or tying-down workers, labels on the machine or separate dockets (such as the load securing docket specified in 8.4) for lifting or tying down that include these recommendations should be prepared.

8.4 In case it is desirable to provide more detailed information for tying down the earth-moving machine, the use of a load securing docket is feasible for indicating how the system has been set up to transport the machine.

NOTE A tying-down docket is called a "load securing docket" in EN 12195-1[3].

8.5 The operator's manual shall have requirements for inspection of lifting and tying-down attachment points. Additionally, the manufacturer shall provide information so that if the lifting or tying-down attachment points show signs of overloading (see 6.2), they need to be replaced in accordance with the manufacturer's instructions.

9 Verification

The strength requirements of the lifting and tying-down attachment points as specified in 4.2 and 5.3 shall be verified by physical test, by calculation or by the use of already proven vendor parts.

For tying-down attachment points, the most stringent mode (road, rail or sea) shall be considered as specified by the manufacturer.

For verification of proof force, no permanent structural deformation shall be visible after the required proof force is applied and then removed.

NOTE Localized deformation (e.g. marks) due to contact with the lifting or tying-down accessories (e.g. chain, hook, shackle) is not considered as permanent structural deformation.

For verification of breaking force, no failure (fracture) shall be visible after the required breaking force is applied. Permanent deformation of lifting or tying-down attachment point is acceptable.

© ISO 2017 – All rights reserved

Annex A
(normative)

Lifting and tying-down information for disassembled machines

Annex A specifies disassembly information for earth-moving machinery so large that it is difficult to transport the whole machine.

The following information shall be described in the operator's or assembly procedure manual provided with the machine:

a) specification of each disassembled component

   1) identification number

   2) name

   3) major dimensions, in millimetres

   4) mass, in tons or in kilograms

   5) quantity, if appropriate

   6) remarks, if required

b) methods and precautions

   1) lifting methods and precautions

   2) tying-down methods and precautions

   3) special tool, if required

© ISO 2017 – All rights reserved

Annex B
(informative)

Lifting, loading, tying down and transporting earth-moving machinery — Methods and recommendations

B.1 Overview

Annex B provides guidance for lifting, loading, tying down and transporting earth-moving machinery and examples in Figures B.1 to B.6.

B.2 Lifting method and configurations

B.2.1 General

See Figures B.1 to B.2 and Figures B.4 to B.5.

The uppermost lifting hook positions should be located joining the lifting bars from three or four lifting attachment points above the machine centre of gravity and should also be in line with it. The attachment points for the accessories on the load should be located over the machine centre of gravity.

It is also recommended that the manufacturer provides guidance, for each machine model or machine family, on the characteristics of the accessories as well as the length of each leg of the sling.

B.2.2 Precautions for safe lifting

The engine should be stopped, controls disabled (where disabling means are available) and any machine motion brake system, such as parking brake and swing parking brake, should be applied; also, machine motion locks, such as swing lock of machines with swinging upper-frame and the articulation lock of a machine with articulated frame, should be in the locked position and the transmission gear should be in engaged position, if so equipped and so far as appropriate.

The machine should be lifted gradually, preserving equilibrium, in order to prevent lifting accessories and attachment points from being impact loaded.

The lifting methods and the precautions should be stated in the operator's maintenance and service manuals.

B.3 Tying-down method and configurations

B.3.1 General

See Figures B.3 to B.6.

The manufacturer should state, for each machine model or machine family, the most appropriate tying-down method and tying-down accessories.

B.3.2 Machine preparation for tie-down

The engine should be stopped and controls disabled (where disabling means are available). Where appropriate, the swing parking brake and parking brake should be applied.

 © ISO 2017 – All rights reserved

B.3.3 Prevention of movement

The machine should be secured to the transport vehicle using both the tying-down attachment points and the tying-down accessories for the machine.

B.3.4 Prevention of upper structure from swinging

The upper structure (including attachment and equipment) should be tied down with tying-down accessories or any other device or devices proper to the machine (automatic or manual) in order to ensure rigidity in transport mode.

B.3.5 Prevention of attachments and equipment from moving

Machine attachments and equipment not secured with on-machine restraint devices that could potentially move beyond the envelope of the transport vehicle shall be prevented from moving. Instructions should be provided for restraining moveable equipment with tying-down accessories.

Those unfixed parts, such as hydraulic cylinders, which can be extended owing to vibration during transportation, should be set securely by positioning any attachment, moveable legs, etc., on the floor of the trailer or be restrained using tying-down accessories or both.

NOTE Some attachments can have provisions from the manufacturer to ensure attachments or moveable legs do not extend outside the transport device (e.g. check valve on a stabilizer arm).

B.3.6 Prevention of frame articulation of articulated frame machines

On articulated frame machines, articulation locks should be in the locked position before the machine is tied down.

B.4 Performance of lifting and tying-down accessories

The operator's manual should recommend that the working limit load (WLL) of the lifting accessories match the mating lifting attachment points' strength requirements as given in Table 1 and that the lashing capacity (LC) of the tying-down accessories meet or exceed the mating attachment points' strength requirements as given in Table 5.

© ISO 2017 – All rights reserved

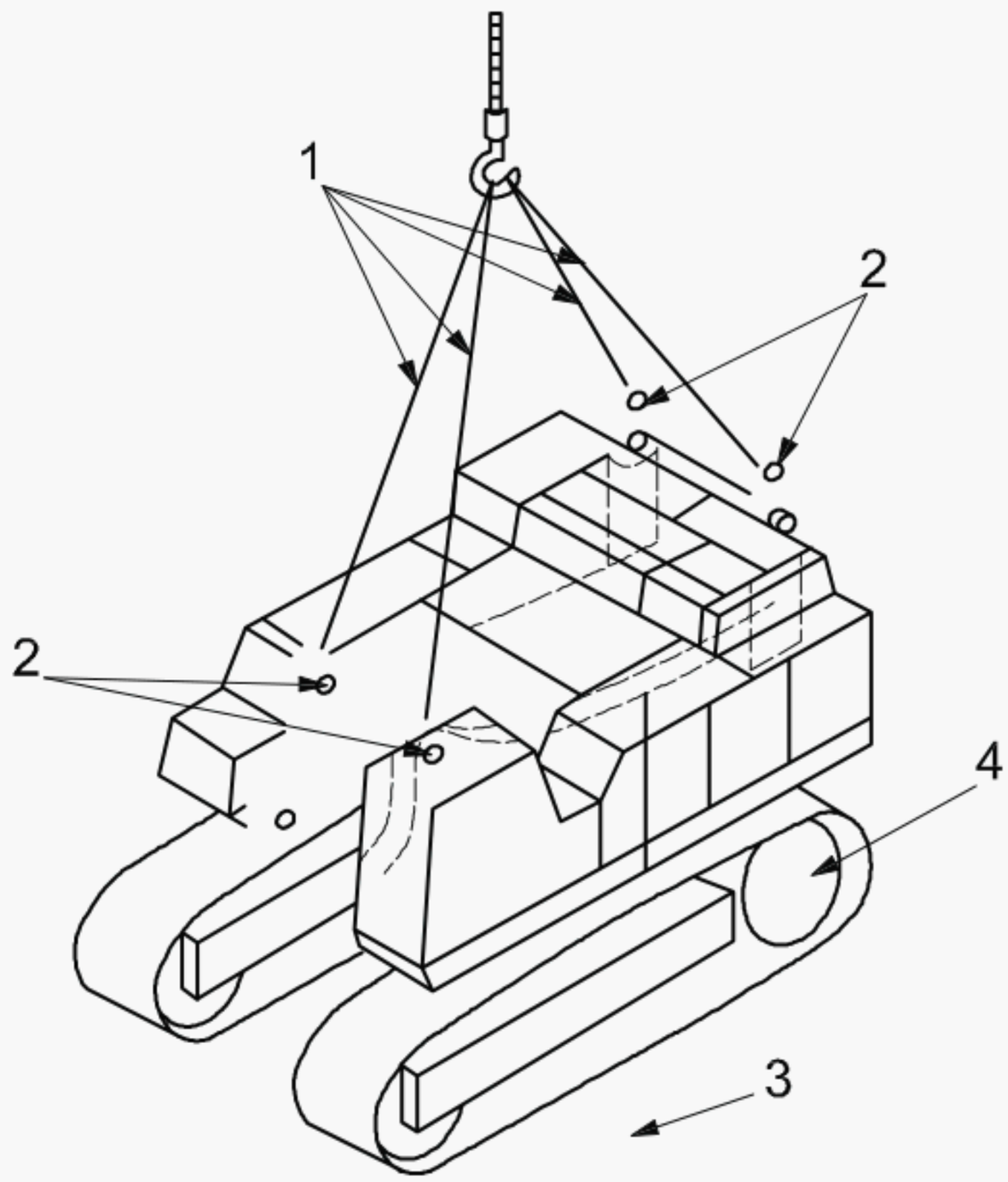

Key

1 lifting accessories
2 lifting attachment point locations (eyes)
3 side view (projection) of the vertical line passing through the centre of gravity
4 sprocket

Figure B.1 — Example of lifting method and lifting attachment point locations for excavators

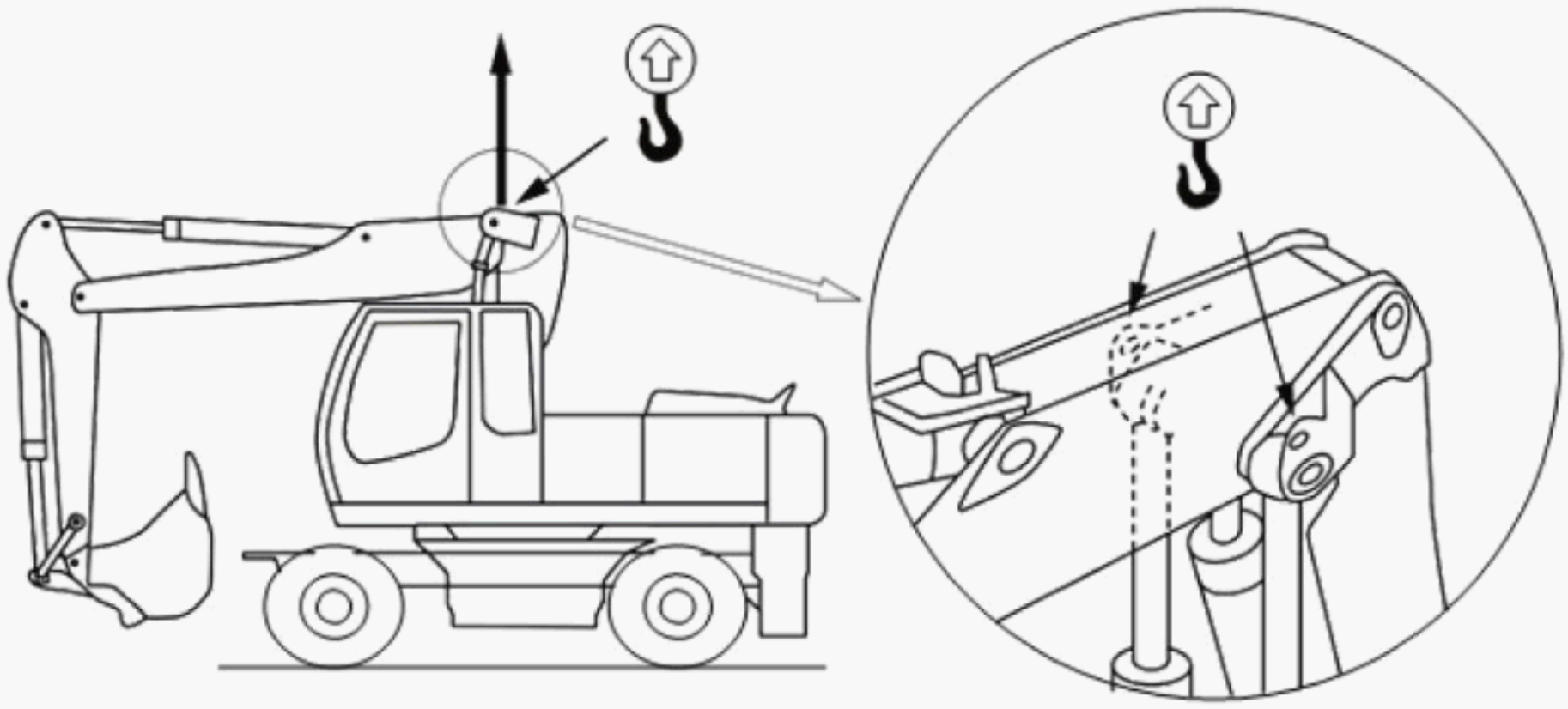

Figure B.2 — Example of lifting method and lifting attachment point locations for wheeled excavators

© ISO 2017 – All rights reserved

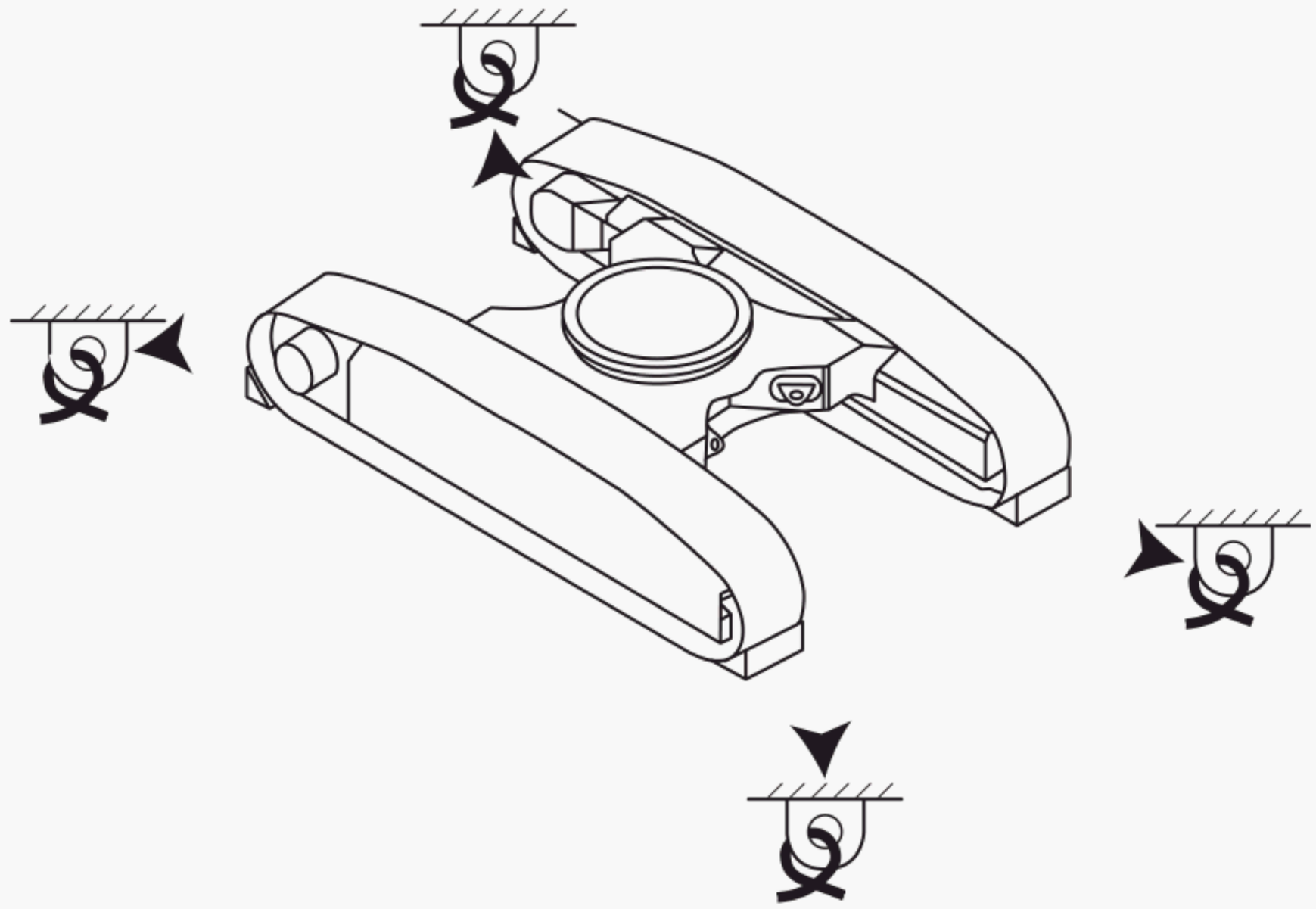

Figure B.3 — Example of tying-down method and attachment point locations for crawler excavators

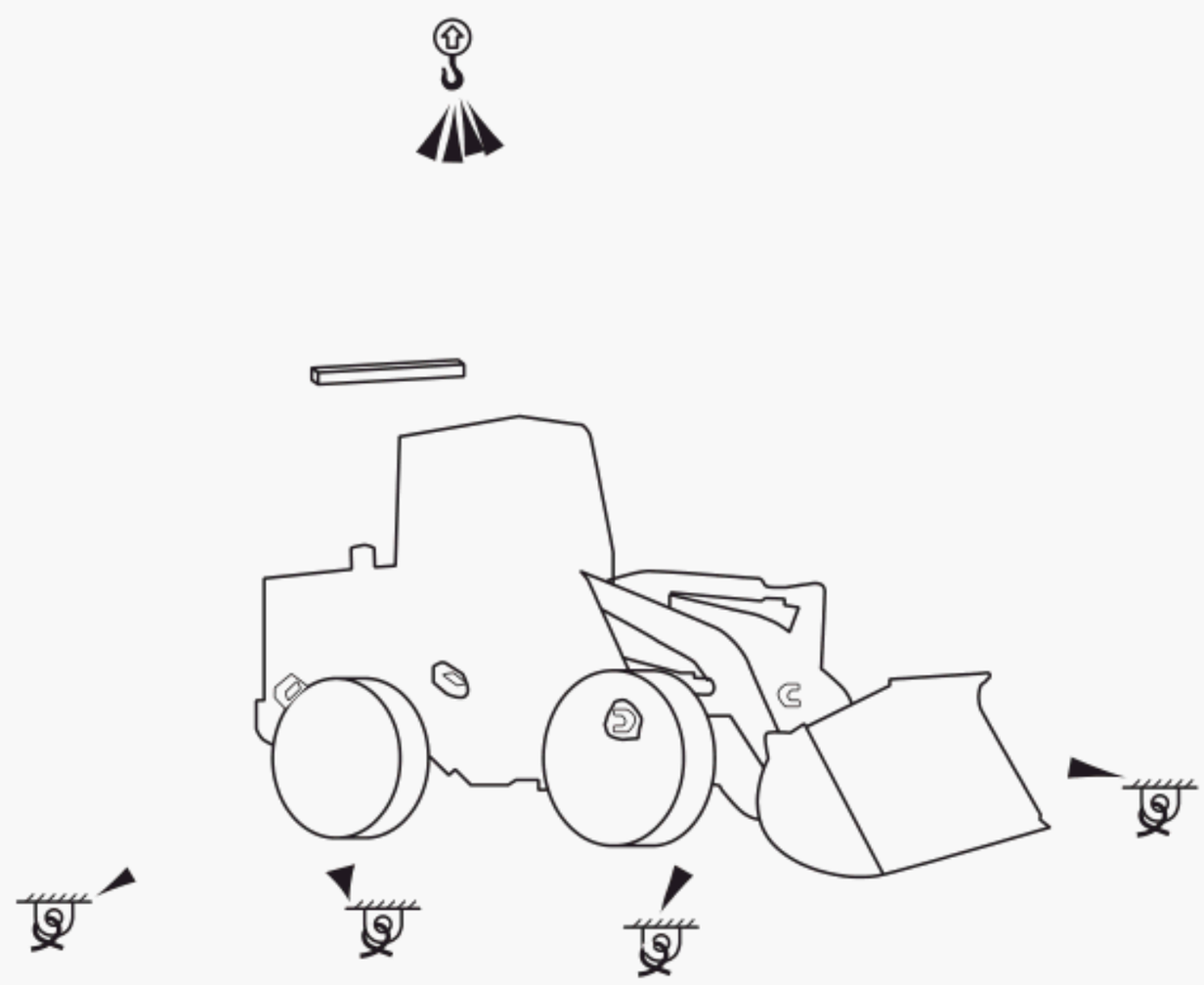

Figure B.4 — Example of lifting and tying-down methods and attachment point locations for loaders

© ISO 2017 – All rights reserved

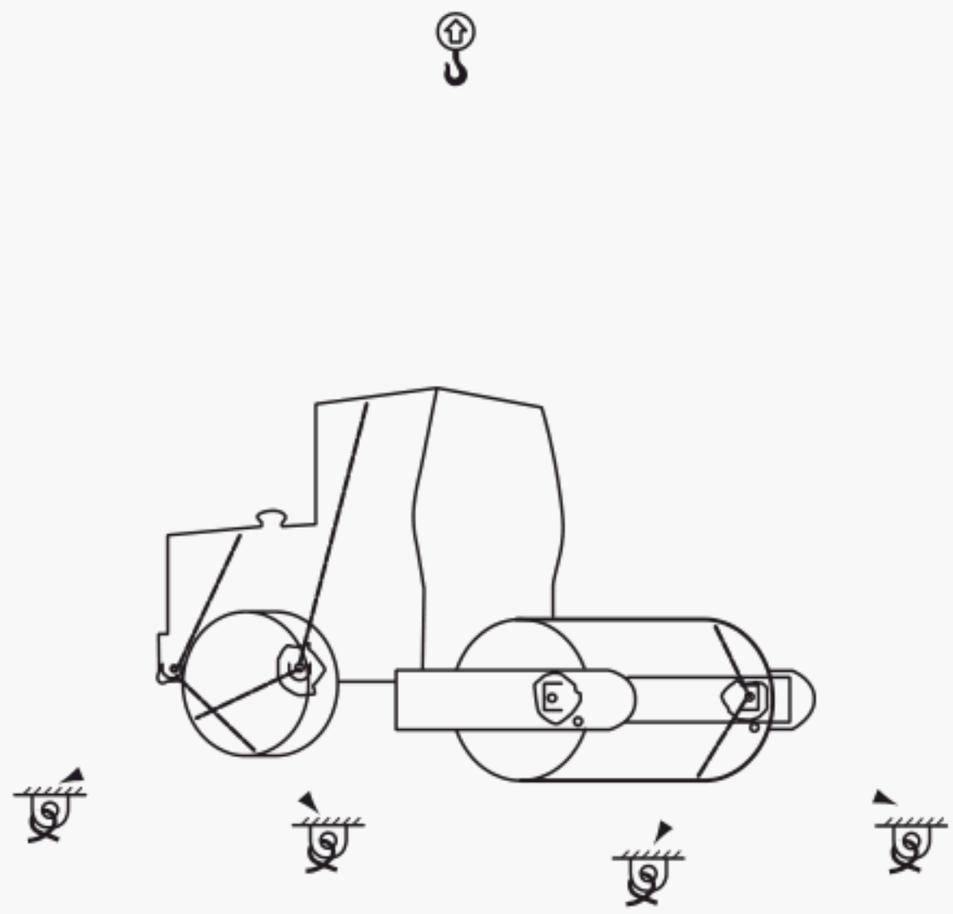

Figure B.5 — Example of lifting and tying-down methods and attachment point locations for compactors

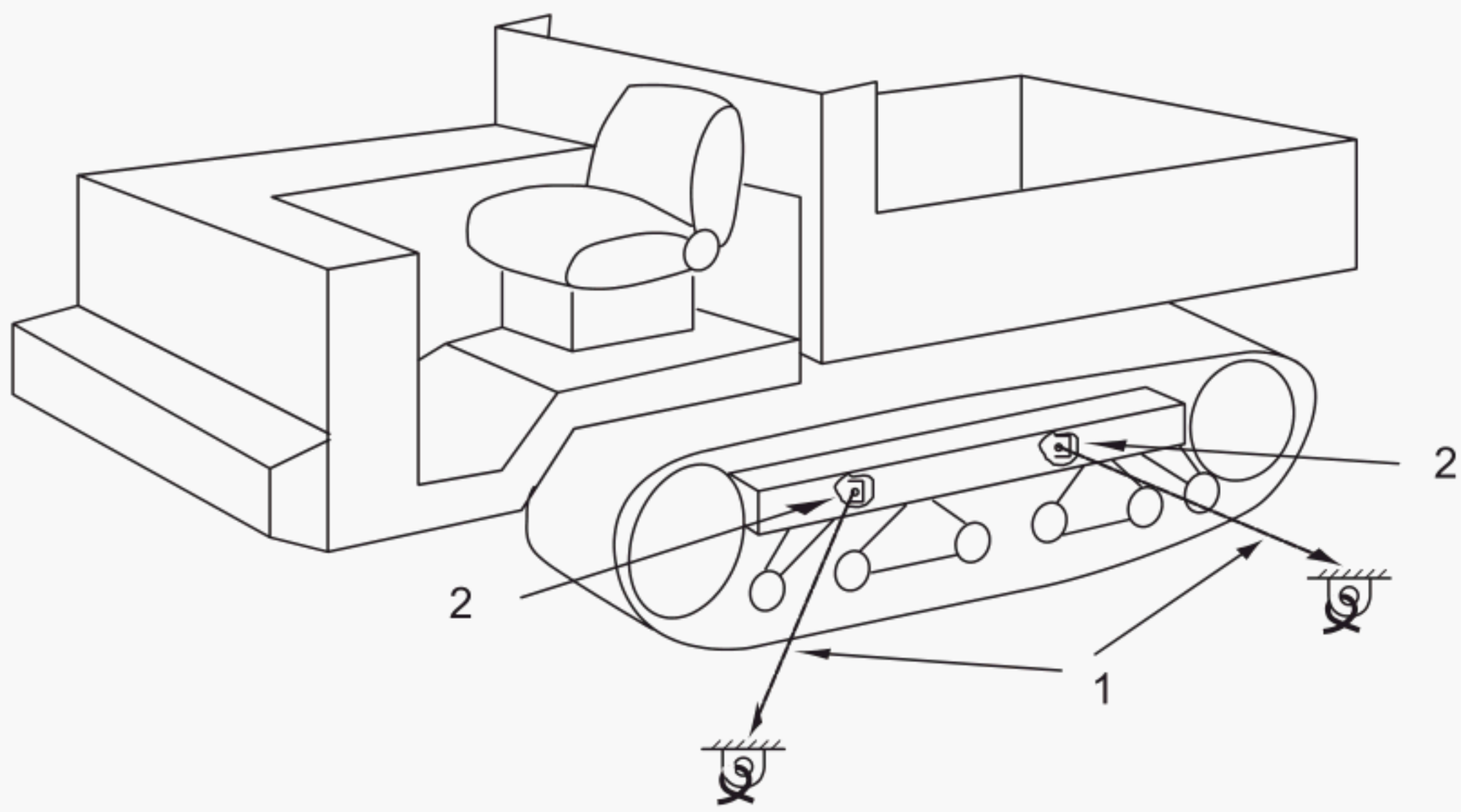

Key

1 tying-down accessories

2 tying-down attachment point

Figure B.6 — Examples of tying-down method and attachment point locations for crawler dumpers

© ISO 2017 – All rights reserved

Annex C
(informative)

Method for calculation of forces on tying-down attachment points in diagonal lashing disposition

C.1 General

Annex C provides a method for calculating the forces on the tying-down attachment points in the diagonal lashing disposition.

C.2 Diagonal lashing

Diagonal lashing is a combination of two sets of lashings set at two different angles, owing to the fact that a longitudinal angle, β_x, and a lateral angle, β_y, can occur additionally to the vertical angle, α, under the lashing (see Figure 3).

This allows for the reduction of the number of lashings from eight to four for a completely secured load.

C.3 Balance of forces in a diagonal lashing

The balance of forces in longitudinal or lateral direction, according to EN 12195-1[3], are the following:

$$2\times F_{Rx,y} + F_{FM} + F_{FR} = F_{x,y} \tag{C.1}$$

$$2\times\cos\alpha\times\cos\beta_{x,y}\times F_R + \mu_D\times\left(m\times c_z\times g + 2\times\sin\alpha\times F_R\right) = m\times c_{x,y}\times g \tag{C.2}$$

$$2\times\left(\cos\alpha\times\cos\beta_{x,y} + \mu_D\times\sin\alpha\right)\times F_R = \left(c_{x,y} - \mu_D\times c_z\right)\times m\times g \tag{C.3}$$

$$F_R = \frac{\left(c_{x,y} - \mu_D\times c_z\right)\times m\times g}{2\times\left(\cos\alpha\times\cos\beta_{x,y} + \mu_D\times\sin\alpha\right)} \tag{C.4}$$

where

C_x, C_y, C_z, g, m, μ_D, α, β_x and β_y are as defined in Table 5;

F_R is the restraining force of a lashing;

F_{FM} is the friction force as a result of the vertical force, F_z;

F_{FR} is the friction force as a result of the restraining force, F_R;

F_x is the longitudinal force actuated by the load;

F_y is the transverse force actuated by the load;

F_z is the vertical force actuated by the load.

© ISO 2017 – All rights reserved

Annex C
(informative)

Method for calculation of forces on tying-down attachment points in diagonal lashing disposition

C.1 General

Annex C provides a method for calculating the forces on the tying-down attachment points in the diagonal lashing disposition.

C.2 Diagonal lashing

Diagonal lashing is a combination of two sets of lashings set at two different angles, owing to the fact that a longitudinal angle, β_x, and a lateral angle, β_y, can occur additionally to the vertical angle, α, under the lashing (see Figure 3).

This allows for the reduction of the number of lashings from eight to four for a completely secured load.

C.3 Balance of forces in a diagonal lashing

The balance of forces in longitudinal or lateral direction, according to EN 12195-1[3], are the following:

$$2\times F_{Rx,y} + F_{FM} + F_{FR} = F_{x,y} \tag{C.1}$$

$$2\times\cos\alpha\times\cos\beta_{x,y}\times F_R + \mu_D\times\left(m\times c_z\times g + 2\times\sin\alpha\times F_R\right) = m\times c_{x,y}\times g \tag{C.2}$$

$$2\times\left(\cos\alpha\times\cos\beta_{x,y} + \mu_D\times\sin\alpha\right)\times F_R = \left(c_{x,y} - \mu_D\times c_z\right)\times m\times g \tag{C.3}$$

$$F_R = \frac{\left(c_{x,y} - \mu_D\times c_z\right)\times m\times g}{2\times\left(\cos\alpha\times\cos\beta_{x,y} + \mu_D\times\sin\alpha\right)} \tag{C.4}$$

where

C_x, C_y, C_z, g, m, μ_D, α, β_x and β_y are as defined in Table 5;

F_R is the restraining force of a lashing;

F_{FM} is the friction force as a result of the vertical force, F_z;

F_{FR} is the friction force as a result of the restraining force, F_R;

F_x is the longitudinal force actuated by the load;

F_y is the transverse force actuated by the load;

F_z is the vertical force actuated by the load.

© ISO 2017 – All rights reserved

ICS 53.100

Price based on 20 pages

© ISO 2017 – All rights reserved