INTERNATIONAL STANDARD

ISO 10392

Second edition
2011-03-15

Road vehicles — Determination of centre of gravity

Véhicules routiers — Détermination du centre de gravité

Reference number
ISO 10392:2011(E)

© ISO 2011

Copyright International Organization for Standardization

PDF disclaimer

This PDF file may contain embedded typefaces. In accordance with Adobe's licensing policy, this file may be printed or viewed but shall not be edited unless the typefaces which are embedded are licensed to and installed on the computer performing the editing. In downloading this file, parties accept therein the responsibility of not infringing Adobe's licensing policy. The ISO Central Secretariat accepts no liability in this area.

Adobe is a trademark of Adobe Systems Incorporated.

Details of the software products used to create this PDF file can be found in the General Info relative to the file; the PDF-creation parameters were optimized for printing. Every care has been taken to ensure that the file is suitable for use by ISO member bodies. In the unlikely event that a problem relating to it is found, please inform the Central Secretariat at the address given below.

COPYRIGHT PROTECTED DOCUMENT

© ISO 2011

All rights reserved. Unless otherwise specified, no part of this publication may be reproduced or utilized in any form or by any means, electronic or mechanical, including photocopying and microfilm, without permission in writing from either ISO at the address below or ISO's member body in the country of the requester.

ISO copyright office
Case postale 56 • CH-1211 Geneva 20
Tel. + 41 22 749 01 11
Fax + 41 22 749 09 47
E-mail copyright@iso.org
Web www.iso.org

Published in Switzerland

Copyright International Organization for Standardization

© ISO 2011 – All rights reserved

Contents

Page

Foreword iv
Introduction v
1 Scope 1
2 Normative references 1
3 Terms and definitions 1
4 Test conditions and preliminary measurements 1
4.1 Operating and other liquids 1
4.2 Preliminary measurements 1
5 Determination of coordinates in horizontal plane 2
5.1 Location of CG longitudinally 2
5.2 Location of CG laterally 2
6 Determination of CG height: Axle lift method 2
6.1 Loading conditions, suspensions and mechanical parts 2
6.2 Measuring procedure 3
6.3 Accuracy of determined parameters 4
6.4 Determination of axle load and lifting angle 4
6.5 Location of CG above ground 4
6.6 Data presentation 5
7 Determination of CG height: Stable pendulum method 5
7.1 General 5
7.2 Loading conditions, vehicle restraints, and mechanical parts 6
7.3 Measuring procedure 6
7.4 Accuracy of determined parameters 7
7.5 Determination of platform properties 7
7.6 Determination of applied torque 7
7.7 Consideration of platform deflection 8
7.8 Location of CG above ground 8
7.9 Data presentation 8
Annex A (informative) Example of test report — Axle lift method 9
Annex B (informative) Example of test report — Stable pendulum method 11
Bibliography 13

Copyright International Organization for Standardization © ISO 2011 – All rights reserved

Foreword

ISO (the International Organization for Standardization) is a worldwide federation of national standards bodies (ISO member bodies). The work of preparing International Standards is normally carried out through ISO technical committees. Each member body interested in a subject for which a technical committee has been established has the right to be represented on that committee. International organizations, governmental and non-governmental, in liaison with ISO, also take part in the work. ISO collaborates closely with the International Electrotechnical Commission (IEC) on all matters of electrotechnical standardization.

International Standards are drafted in accordance with the rules given in the ISO/IEC Directives, Part 2.

The main task of technical committees is to prepare International Standards. Draft International Standards adopted by the technical committees are circulated to the member bodies for voting. Publication as an International Standard requires approval by at least 75 % of the member bodies casting a vote.

Attention is drawn to the possibility that some of the elements of this document may be the subject of patent rights. ISO shall not be held responsible for identifying any or all such patent rights.

ISO 10392 was prepared by Technical Committee ISO/TC 22, *Road vehicles*, Subcommittee SC 9, *Vehicle dynamics and road-holding ability*.

This second edition cancels and replaces the first edition (ISO 10392:1992). Clause 7 has been added.

Copyright International Organization for Standardization
© ISO 2011 – All rights reserved

Introduction

Two methods for determining the height of the centre of gravity above the ground are presented. The first method, the axle lift method, was the only method contained in ISO 10392:1992. The second method, a stable pendulum method, was added to this second edition of ISO 10392. The model, assumptions, and measurements used for the stable pendulum method have many analogies to the unstable pendulum method (often referred to as the tilt table method). Clause 7 includes a brief discussion of the unstable pendulum method for determining vehicle centre of gravity (CG) height. Other procedures such as vertical balance methods and vehicle hang methods are also used.

Copyright International Organization for Standardization
© ISO 2011 – All rights reserved

Copyright International Organization for Standardization

Road vehicles — Determination of centre of gravity

1 Scope

This International Standard specifies methods for determining the location of the centre of gravity (CG) of a road vehicle, as defined in ISO 3833. A method for determining the coordinates of the CG in the horizontal plane is provided. Two methods for determining the height of the CG above the ground are specified.

The axle lift and the stable pendulum methods are the most common methods for determining vehicle CG height. The axle lift method requires less dedicated equipment and is typically an easier and less expensive method than the stable pendulum method. The axle lift method can generally provide CG height accuracy in the range of a few percent, while the stable pendulum method can provide accuracy in the range of 0,5 %.

2 Normative references

The following referenced documents are indispensable for the application of this document. For dated references, only the edition cited applies. For undated references, the latest edition of the referenced document (including any amendments) applies.

ISO 612, *Road vehicles — Dimensions of motor vehicles and towed vehicles — Terms and definitions*

ISO 3833, *Road vehicles — Types — Terms and definitions*

ISO 8855, *Road vehicles — Vehicle dynamics and road-holding ability — Vocabulary*

3 Terms and definitions

For the purposes of this document, the terms and definitions given in ISO 612, ISO 3833 and ISO 8855 apply.

4 Test conditions and preliminary measurements

4.1 Operating and other liquids

The fuel tank shall be completely full. Fuel motion within an unfilled fuel tank can have an adverse effect on the test results. If the displacement of other liquids (operating and other) due to the inclination of the vehicle during testing is considered significant, this shall be taken into account.

4.2 Preliminary measurements

With the vehicle horizontal, and in accordance with the dimensions given in ISO 612 and ISO 8855, measure and record:

l_{left}, the wheelbase, left, in millimetres;

l_{right}, the wheelbase, right, in millimetres;

Copyright International Organization for Standardization
© ISO 2011 – All rights reserved

b_f, the track, front, in millimetres;

b_r, the track, rear, in millimetres;

m_1, the wheel load, front left, in kilograms;

m_2, the wheel load, front right, in kilograms;

m_3, the wheel load, rear left, in kilograms;

m_4, the wheel load, rear right, in kilograms.

5 Determination of coordinates in horizontal plane

5.1 Location of CG longitudinally

The horizontal distance between centre of front axle and CG, x_{CG}, in millimetres, is determined by the equation:

$$x_{CG} = \frac{m_r}{m_v} \times l \tag{1}$$

where

$m_r = m_3 + m_4$ (as defined in 4.2) (2)
is rear axle load, in kilograms;

$m_v = m_1 + m_2 + m_3 + m_4$ (as defined in 4.2) (3)
is total mass of vehicle, in kilograms;

$l = 0{,}5\ (l_{left} + l_{right})$ (as defined in 4.2) (4)
is wheelbase of the vehicle, in millimetres.

5.2 Location of CG laterally

The horizontal distance between the longitudinal median plane of the vehicle and the CG (positive to the left), y_{CG}, in millimetres, is determined by the equation:

$$y_{CG} = \frac{b_f(m_1 - m_2) + b_r(m_3 - m_4)}{2m_v} \tag{5}$$

where all symbols are as defined in 4.2.

6 Determination of CG height: Axle lift method

6.1 Loading conditions, suspensions and mechanical parts

Any load shall be held in place to avoid displacement due to the inclination of the vehicle.

After loading the vehicle to the desired loading conditions, the wheel suspension can be blocked if necessary, to avoid changes in deflection due to the inclination of the vehicle. This may also apply to other vehicle components that could affect the test result due to flexible mounting.

Copyright International Organization for Standardization
© ISO 2011 – All rights reserved

When lifting the vehicle, the gear-box shall be in neutral. The parking-brake shall be released; rolling of the wheels of one axle only shall be avoided by wedges or other means. The front wheels shall remain pointing straight ahead as far as possible.

6.2 Measuring procedure

6.2.1 With the vehicle horizontal, measure and record the static radii:

$r_{stat,1}$, the static loaded radius, front left, in millimetres;

$r_{stat,2}$, the static loaded radius, front right, in millimetres;

$r_{stat,3}$, the static loaded radius, rear left, in millimetres;

$r_{stat,4}$, the static loaded radius, rear right, in millimetres.

The static loaded radius may be determined as shown in Figure 1. The formula is sufficiently accurate for the test procedure described in this International Standard.

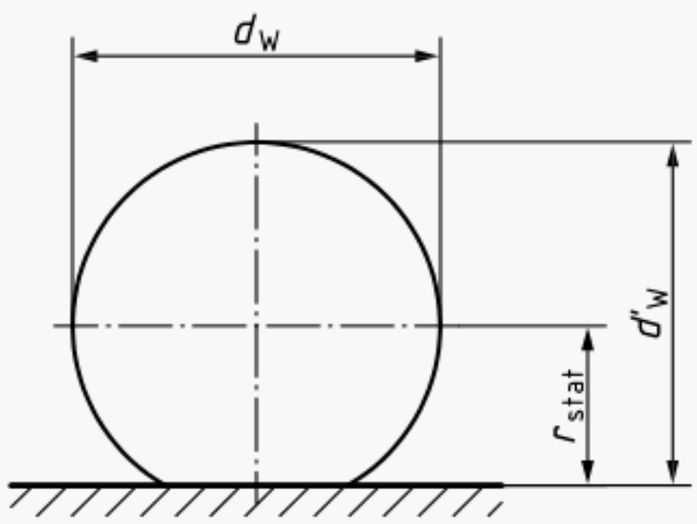

$$r_{stat} = d'_w - d_w / 2$$

Key

d_w wheel diameter

d'_w loaded wheel diameter

r_{stat} static loaded radius

Figure 1 — Determination of static loaded radius, r_{stat}

6.2.2 Lift one axle in steps (three or more steps are recommended). Record the axle load of the other axle and the lifting angle for each position. The maximum lifting angle and the accuracy of the scale used to measure axle load affect the accuracy of the computation of the CG height.

6.2.3 To take the hysteresis into account, lower the lifted axle by steps back to the level position and record axle loads and lifting angle as described in 6.2.2.

6.2.4 Plot the axle loads against the tangent of the corresponding lifting angles and determine the mean value of axle load for a corresponding lifting angle. The plot can also be useful for checking the linearity of the measurements. An alternative to generating the plot is to compute the individual CG heights using the individual load and angle measurements, using the equations provided in 6.5, and then averaging these values to get a final answer.

6.2.5 It is recommended that all the measurements be repeated lifting the other axle.

6.2.6 It may also be desirable to determine the lifting angle from the wheelbase and the elevation of the wheels above the ground for each inclination position. In this case the change in tyre deformation caused by lifting one end of the vehicle shall be taken into consideration.

© ISO 2011 – All rights reserved
Copyright International Organization for Standardization

6.3 Accuracy of determined parameters

The following accuracies are required:

— absolute axle load value: ±0,2 %;

— change in axle loads due to lifting: ±2,5 %;

NOTE Applies to scales which do not measure absolute loads, but changes in loads.

— dimensions: < 2,000 mm: ±1 mm;

> 2,000 mm: ±0,05 %;

— angles: ±0,5 %.

6.4 Determination of axle load and lifting angle

The following values are obtained from the plotted data by linear curve fitting:

— m'_f and m'_r which are axle loads at front and rear respectively of the axle remaining on the ground while the vehicle is inclined;

— θ which is the corresponding lifting angle.

6.5 Location of CG above ground

The height of the CG above ground, z_{CG}, in millimetres, is determined by the equations:

$$z_{CG} = \frac{l(m'_f - m_f)}{m_v \times \tan\theta} + r_{stat,f} \quad (6)$$

or

$$z_{CG} = \frac{l(m'_r - m_r)}{m_v \times \tan\theta} + r_{stat,r} \quad (7)$$

where

m_f $= m_1 + m_2$ (as defined in 4.2) (8)
is front axle load, in kilograms;

m_r $= m_3 + m_4$ (as defined in 4.2) (9)
is rear axle load, in kilograms;

$r_{stat,f}$ $= 0{,}5(r_{stat,1} + r_{stat,2})$ (10)
is static loaded radius, front, in millimetres;

$r_{stat,r}$ $= 0{,}5(r_{stat,2} + r_{stat,3})$ (11)
is static loaded radius, rear, in millimetres;

l and m_v are as defined in 5.1.

NOTE m_f and m_r may be measured directly if only the height of the CG is required, in which case m_1, m_2, m_3 and m_4 are not needed.

Copyright International Organization for Standardization
© ISO 2011 – All rights reserved

6.6 Data presentation

Measured data and test results shall be presented in a test report as shown in Annex A.

7 Determination of CG height: Stable pendulum method

7.1 General

This section contains a detailed description of the stable pendulum method for determining vehicle CG height. Figure 2 is a diagram of the stable pendulum method for determining vehicle CG height. For the stable pendulum method, the CG of the combined vehicle and vehicle support platform system are below the pivot axis. This diagram shows the stable pendulum method in a pitch configuration, with a lateral pivot axis parallel to the road plane. The stable pendulum method can also be configured in a roll configuration, with a longitudinal pivot axis parallel to the road plane. The equations provided in this clause are derived from a static torque balance about the pivot axis. In this case, a static disturbance torque is applied to the system by hanging known masses at a known distance from the pivot axis.

A similar model and formulation of equilibrium equations can be used for the unstable pendulum method, except that the pivot axis is below the CG of the combined vehicle and vehicle platform system. For the unstable pendulum method, a static retarding torque is required to maintain the vehicle/platform system at any given tilt angle about the pivot axis. In this case, force measurements, made using a scale or load cell placed at a known distance from the pivot axis, are used to determine the torque required to balance the system. Equations similar to those presented in this section, but with mathematical sign changes on some of the terms, can be derived for the unstable pendulum method. By using similar levels of accuracy for the required measurements and equipment specifications, the overall accuracy of the unstable pendulum method is similar to that of the stable pendulum method.

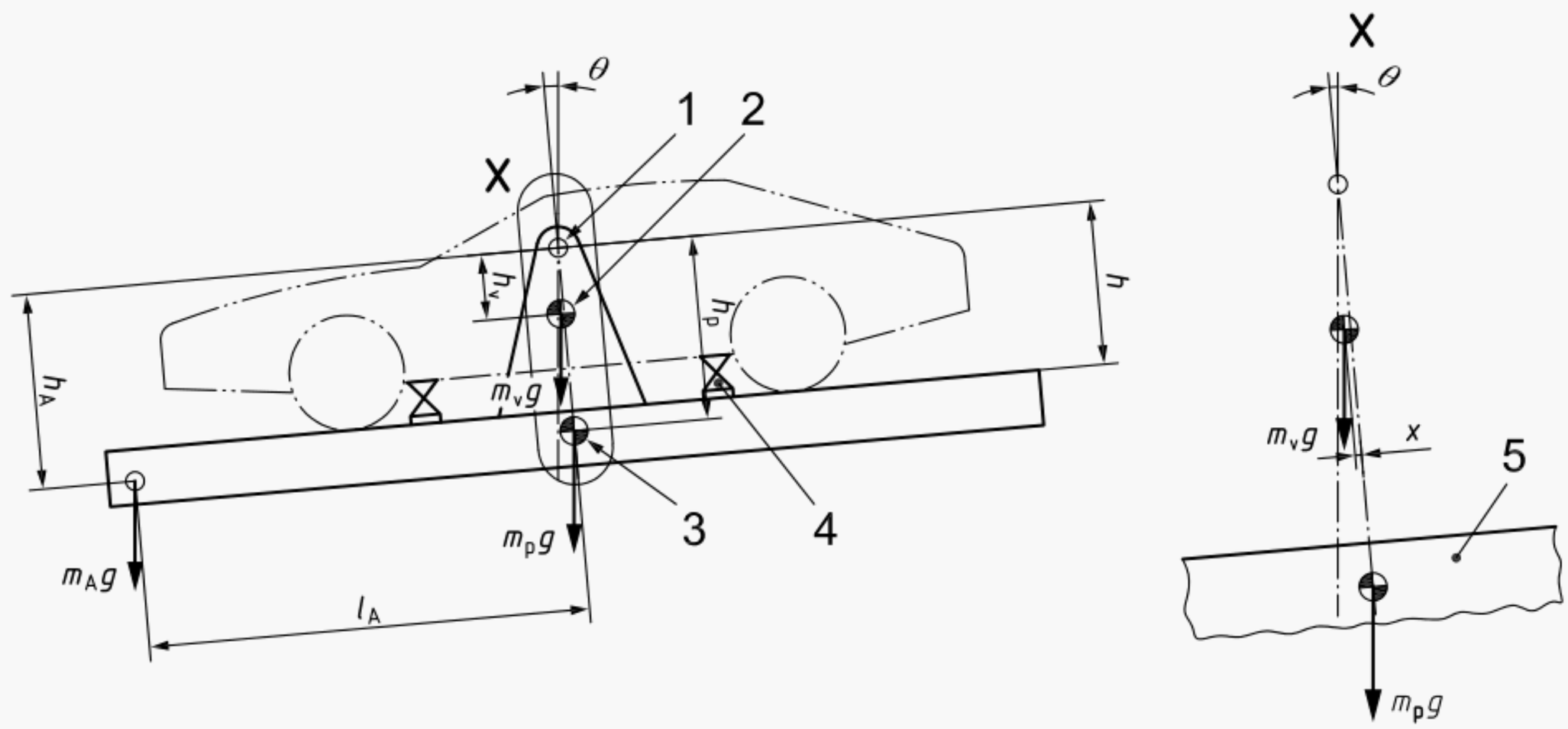

Key

h pivot height

h_v vehicle's CG distance below the pivot axis

h_p platform's CG distance below the pivot axis

m_v mass of the vehicle

m_p mass of the platform including the restraint components

θ tilt angle of the platform relative to the gravity vector (positive for the front of the vehicle pitched down, as shown above)

Figure 2 (*continued*)

Copyright International Organization for Standardization

x longitudinal displacement of the vehicle relative to the platform (positive for forward vehicle displacement, as shown above)

h_A vertical distance from the pivot axis to the location of the applied weight

l_A horizontal distance from the pivot axis to the location of the applied weight

m_A mass of the applied load

1 pivot
2 vehicle CG
3 platform CG
4 restraint
5 platform
X detail area

Front and rear vehicle restraint components are depicted in Figure 2. The total mass of the restraint components (m_{res}) and the CG height of the restraint components (h_{res}) are used in the determination of m_p and h_p.

Figure 2 — Side view of vehicle CG height measurement using stable pendulum method

7.2 Loading conditions, vehicle restraints, and mechanical parts

Any load shall be held in place to avoid displacement due to the inclination of the vehicle.

After loading the vehicle to the desired loading conditions, the vehicle shall be weighed and its total mass, m_v, recorded. The vehicle shall then be restrained to the pendulum platform in such a fashion as to minimize chassis motion relative to the platform. The total mass of the restraint components (shims, blocks, jacks, straps, etc.), m_{res}, and the CG height of the restraint components' mass, h_{res}, shall be determined and recorded.

When tilting the platform, the vehicle transmission shall be in the park position and the parking brake shall be applied. The front wheels shall remain pointing straight ahead as much as possible.

For optimum accuracy, the pendulum platform should be as light and as rigid as possible. Also, the pivot bearings must have low friction and be precisely aligned.

The distance of pivot height above the platform (h_{pivot}) and weight hanger locations (l_A and h_A) must be measured precisely.

7.3 Measuring procedure

7.3.1 Position the loaded vehicle on the pendulum platform such that the vehicle/platform system longitudinal CG is located nearly directly below the pivot. The tilt angle of the platform with the restrained vehicle secured to it should be less than 0,5 degrees to start the test. This is the angle with zero applied load, θ_{ZERO}.

7.3.2 The accuracy of the CG height calculation relies on making an accurate measurement of the longitudinal motion of the vehicle relative to the platform, x. Mount a target to both sides of the vehicle. Use suitable displacement transducers mounted rigidly to the platform to measure the longitudinal distances from the transducers to the targets. The average of the distances with zero applied load is x_{ZERO}.

7.3.3 After recording θ_{ZERO} and x_{ZERO}, apply a known mass, m_A, near the fore end of the platform at known location defined by l_A and h_A (see Figure 2). The amount of applied load should be such as to cause the platform to tilt no more than five degrees. Repeat with a different applied load to cause the platform to tilt to a different angle, but still no more than five degrees. Repeat this procedure for rearward tilt angles by applying loads near the aft end of the platform. Record θ, x, and m_A for all test conditions.

Copyright International Organization for Standardization
© ISO 2011 – All rights reserved

7.4 Accuracy of determined parameters

7.4.1 The following accuracies for measurements are required:

— θ range < ±5,0 degrees;
accuracy ±0,1 %;

— x range ±20 mm;
accuracy ±0,5 %;

— m_v ±1 %.

7.4.2 The following accuracies for equipment specifications are required:

— m_p ±1,5 kg;

— h_p ±2,5 mm;

— m_A ±5 g;

— l_A ±1 mm;

— h_A ±1 mm.

7.5 Determination of platform properties

The first step in the CG height analysis is to account for the restraint components that secure the vehicle to the platform. In the CG height analysis, the restraint components are considered to be part of the platform, and the total platform mass, m_p, and the total platform CG height, h_p, are adjusted for the restraint components using the following equations:

$$m_p = m_{p(Empty)} + m_{res} \tag{12}$$

$$h_p = \frac{(h_{pivot} - h_{res}) \cdot m_{res} + h_{p(Empty)} \cdot m_{p(Empty)}}{m_{res} + m_{p(Empty)}} \tag{13}$$

where

$m_{p(Empty)}$ is empty platform mass;

$h_{p(Empty)}$ is CG distance below the pivot axis;

h_{pivot} is the distance from the pivot axis to the top surface of the platform.

NOTE The height of the CG of the restraint components, h_{res}, is measured up from the platform, while the other distances in the equation above are measured from the pivot down.

7.6 Determination of applied torque

The analysis of the CG test models the vehicle/platform system as being in static equilibrium and having two degrees of freedom: platform angle, θ, and the longitudinal displacement between the vehicle and platform, x. When an applied mass, m_A, is hung on the platform, the vehicle/platform system rotates about the platform pivot axis. After all system motion has damped out, the system will be at its static equilibrium position, with platform angle θ. The torque, T_A, applied to the system by mass, m_A, is:

$$T_A = m_A \cdot g \cdot \left[l_A \cdot \cos\theta - h_A \cdot \sin\theta \right] \tag{14}$$

Copyright International Organization for Standardization

where

g is the gravitational constant.

7.7 Consideration of platform deflection

The pendulum platform should be very stiff. However, even a very rigid platform will deflect somewhat under the load of a vehicle. Platform deflection changes the vehicle CG location relative to the pivot axis. With knowledge of the wheel loads, wheelbase, and track width, theory can be used to compute the vertical deflection of the platform under the vehicle's tyres, represented here as D_Z, the average platform deflection under the vehicle's tyres due to the weight of the vehicle. Platform deflection is a function of the geometric structure of the specific platform. For a stiff platform, platform deflection will not be significant for most test vehicles. However, for completeness, it should be included in the data analysis for all test vehicles.

The platform CG height will also change due to the weight of the vehicle, and this change in platform CG height will be similar in magnitude to D_Z.

The change in CG height of the platform due to the weight of the vehicle, Δh_p, can also be computed from the vehicle wheelbase, vehicle weight, platform length, and other platform-specific parameters. The CG height of the platform is modified according to Equation (15):

$$h'_p = h_p + \Delta h_p \tag{15}$$

7.8 Location of CG above ground

The vehicle CG distance below the pivot axis, h_v, is computed by summing the moments acting about the pivot axis (Figure 2):

$$\sum M_{PIVOT} = 0 \tag{16}$$

$$\begin{aligned} 0 = {} & T_A - m_p \cdot g \cdot h'_p \cdot \sin(\theta - \theta_{ZERO}) - \cdots \\ & \cdots - m_v \cdot g \cdot \left[h_v \cdot \sin(\theta - \theta_{ZERO}) - (x - x_{ZERO}) \cdot \cos(\theta - \theta_{ZERO}) \right] \end{aligned} \tag{17}$$

Calculating h_v with Equation (18):

$$h_v = \frac{T_A - m_p \cdot g \cdot h'_p \cdot \sin(\theta - \theta_{ZERO})}{m_v \cdot g \cdot \sin(\theta - \theta_{ZERO})} + \frac{x - x_{ZERO}}{\tan(\theta - \theta_{ZERO})} \tag{18}$$

The vehicle CG height above the ground, z_{CG}, can now be calculated using Equation (19):

$$z_{CG} = h_{pivot} + D_Z - h_v \tag{19}$$

NOTE 1 m_v can be measured directly if only the height of the CG is required, in which case m_1, m_2, m_3 and m_4 are not needed.

NOTE 2 The CG position of the mass of the empty platform, $h_{p(Empty)}$, can be determined using a similar process to the one described herein for determining vehicle CG height.

7.9 Data presentation

Measured data and test results shall be presented in a test report as shown in Annex B.

Copyright International Organization for Standardization
© ISO 2011 – All rights reserved

Annex A
(informative)

Example of test report — Axle lift method

A.1 Vehicle identification

A.1.1 Make: .....

A.1.2 Model: .....

A.1.3 Type: .....

A.1.4 Tyres:

Tyre size, front: ..... rear: .....

Tyre pressure, front: ..... rear: .....

A.1.5 Suspension setting (if applicable): .....

A.2 Measurement data

A.2.1 Loading conditions (description of the loads, e.g. dummies, luggage, etc., and their locations in vehicle):

.....

.....

A.2.2 Masses (loads):

Front left: ..... kg Rear left: ..... kg

Front right: ..... kg Rear right: ..... kg

Front total: ..... kg Rear total: ..... kg

Total vehicle: ..... kg

A.2.3 Track, front: ..... mm rear: ..... mm

A.2.4 Wheelbase, left: ..... mm right: ..... mm

A.2.5 Static load radii:

Front left: ..... mm Rear left: ..... mm

Front right: ..... mm Rear right: ..... mm

Copyright International Organization for Standardization
© ISO 2011 – All rights reserved

A.3 Test results

A.3.1 Longitudinal displacement between centre of front axle and CG: ..... mm

A.3.2 Distance between the longitudinal median plane of the vehicle and the CG (positive to the left): ..... mm

A.3.3 Height of the CG above the ground: ..... mm

A.3.3.1 Test with lifted front axle

lifting angle: ..... °

rear axle load (vehicle inclined): ..... kg

height of CG, front axle lifted: ..... mm

A.3.3.2 Test with lifted rear axle

lifting angle: ..... °

front axle load (vehicle inclined): ..... kg

height of CG, rear axle lifted: ..... mm

Copyright International Organization for Standardization
© ISO 2011 – All rights reserved

Annex B
(informative)

Example of test report — Stable pendulum method

B.1 Vehicle identification

B.1.1 Make: .....

B.1.2 Model: .....

B.1.3 Type: .....

B.1.4 Tyres:

Tyre size, front: ..... rear: .....

Tyre pressure, front: ..... rear: .....

B.1.5 Suspension setting (if applicable): .....

B.2 Measurement data

B.2.1 Loading conditions (description of the loads, e.g. dummies, luggage, etc., and their locations in vehicle):

.....

.....

B.2.2 Masses (loads):

Front left: .....kg Rear left: .....kg

Front right: .....kg Rear right: .....kg

Front total: .....kg Rear total: .....kg

Total, vehicle: .....kg

B.2.3 Track, front: .....mm rear: .....mm

B.2.4 Wheelbase, left: .....mm right: .....mm

B.2.5 Platform and restraint properties:

Distance from pivot to top of platform surface, h_{pivot}: ..... mm

Empty platform mass, $m_{p(Empty)}$: ..... kg Empty platform CG, $h_{p(Empty)}$: ..... mm

Restraint components mass, m_{res}: ..... kg Restraint components CG, h_{res}: ..... mm

© ISO 2011 – All rights reserved
Copyright International Organization for Standardization

Total platform mass, m_p: ..... kg

Total platform CG, h_p: ..... mm

Angle with zero applied load, θ_{ZERO}: ..... °

Displacement with zero applied load, x_{ZERO}: ..... mm

Platform deflection due to vehicle weight, D_Z: ..... mm

Change in platform CG due to vehicle weight, Δh_p: ..... mm

B.3 Test results

B.3.1 Longitudinal displacement between centre of front axle and CG: ..... mm

B.3.2 Distance between the longitudinal median plane of the vehicle and the CG (positive to the left): ..... mm

B.3.3 Height of the CG above the ground (see Table B.1).

Table B.1 — Height of the CG above the ground

Measured platform angle (< ±5°) θ (deg)	**Measured vehicle displacement** x (mm)	**Applied mass** m_A (kg)	**Computed applied torque** T_A (N-mm)	**Height of CG** z_{CG} (mm)
Average height of CG				

Copyright International Organization for Standardization
© ISO 2011 – All rights reserved

Bibliography

[1] ISO 789-6, *Agricultural tractors — Test procedures — Part 6: Centre of gravity*

[2] ISO 5005, *Earth-moving machinery — Method for locating the centre of gravity*

[3] ISO 8705, *Mopeds — Measurement method for location of centre of gravity*

[4] ISO 9130, *Motorcycles — Measurement method for location of centre of gravity*

Copyright International Organization for Standardization
© ISO 2011 – All rights reserved

ICS 43.020

Price based on 13 pages

© ISO 2011 – All rights reserved
Copyright International Organization for Standardization