IEEE SA
STANDARDS ASSOCIATION

IEEE Guide for Grip Test Method for Fittings of High-Temperature, Low-Sag Overhead Conductor Under Tension and Electric Current Co-Effect

IEEE Power and Energy Society

Developed by the
Transmission and Distribution Committee

IEEE Std 2870™-2022

IEEE

IEEE STANDARDS

IEEE Guide for Grip Test Method for Fittings of High-Temperature, Low-Sag Overhead Conductor Under Tension and Electric Current Co-Effect

Developed by the

Transmission and Distribution Committee
of the
IEEE Power and Energy Society

Approved 9 February 2022

IEEE SA Standards Board

Abstract: Introduced in this guide is the grip test method for fittings of high-temperature, low-sag overhead conductor with long-term operating temperature of between 90 °C and 250 °C in the co-effect of the tension and the current.

Keywords: current, grip strength, high-temperature low-sag overhead conductor, IEEE 2870, tension, test

The Institute of Electrical and Electronics Engineers, Inc.
3 Park Avenue, New York, NY 10016-5997, USA

Copyright © 2022 by The Institute of Electrical and Electronics Engineers, Inc.
All rights reserved. Published 31 March 2022. Printed in the United States of America.

IEEE is a registered trademark in the U.S. Patent & Trademark Office, owned by The Institute of Electrical and Electronics Engineers, Incorporated.

PDF: ISBN 978-1-5044-8460-2 STD25256
Print: ISBN 978-1-5044-8461-9 STDPD25256

IEEE prohibits discrimination, harassment, and bullying.
For more information, visit https://www.ieee.orgabout/corporate/governance/p9-26.html.
No part of this publication may be reproduced in any form, in an electronic retrieval system or otherwise, without the prior written permission of the publisher.

Important Notices and Disclaimers Concerning IEEE Standards Documents

IEEE Standards documents are made available for use subject to important notices and legal disclaimers. These notices and disclaimers, or a reference to this page (https://standards.ieee.org/ipr/disclaimers.html), appear in all standards and may be found under the heading "Important Notices and Disclaimers Concerning IEEE Standards Documents."

Notice and Disclaimer of Liability Concerning the Use of IEEE Standards Documents

IEEE Standards documents are developed within the IEEE Societies and the Standards Coordinating Committees of the IEEE Standards Association (IEEE SA) Standards Board. IEEE develops its standards through an accredited consensus development process, which brings together volunteers representing varied viewpoints and interests to achieve the final product. IEEE Standards are documents developed by volunteers with scientific, academic, and industry-based expertise in technical working groups. Volunteers are not necessarily members of IEEE or IEEE SA, and participate without compensation from IEEE. While IEEE administers the process and establishes rules to promote fairness in the consensus development process, IEEE does not independently evaluate, test, or verify the accuracy of any of the information or the soundness of any judgments contained in its standards.

IEEE makes no warranties or representations concerning its standards, and expressly disclaims all warranties, express or implied, concerning this standard, including but not limited to the warranties of merchantability, fitness for a particular purpose and non-infringement. In addition, IEEE does not warrant or represent that the use of the material contained in its standards is free from patent infringement. IEEE standards documents are supplied "AS IS" and "WITH ALL FAULTS."

Use of an IEEE standard is wholly voluntary. The existence of an IEEE Standard does not imply that there are no other ways to produce, test, measure, purchase, market, or provide other goods and services related to the scope of the IEEE standard. Furthermore, the viewpoint expressed at the time a standard is approved and issued is subject to change brought about through developments in the state of the art and comments received from users of the standard.

In publishing and making its standards available, IEEE is not suggesting or rendering professional or other services for, or on behalf of, any person or entity, nor is IEEE undertaking to perform any duty owed by any other person or entity to another. Any person utilizing any IEEE Standards document, should rely upon his or her own independent judgment in the exercise of reasonable care in any given circumstances or, as appropriate, seek the advice of a competent professional in determining the appropriateness of a given IEEE standard.

IN NO EVENT SHALL IEEE BE LIABLE FOR ANY DIRECT, INDIRECT, INCIDENTAL, SPECIAL, EXEMPLARY, OR CONSEQUENTIAL DAMAGES (INCLUDING, BUT NOT LIMITED TO: THE NEED TO PROCURE SUBSTITUTE GOODS OR SERVICES; LOSS OF USE, DATA, OR PROFITS; OR BUSINESS INTERRUPTION) HOWEVER CAUSED AND ON ANY THEORY OF LIABILITY, WHETHER IN CONTRACT, STRICT LIABILITY, OR TORT (INCLUDING NEGLIGENCE OR OTHERWISE) ARISING IN ANY WAY OUT OF THE PUBLICATION, USE OF, OR RELIANCE UPON ANY STANDARD, EVEN IF ADVISED OF THE POSSIBILITY OF SUCH DAMAGE AND REGARDLESS OF WHETHER SUCH DAMAGE WAS FORESEEABLE.

Translations

The IEEE consensus development process involves the review of documents in English only. In the event that an IEEE standard is translated, only the English version published by IEEE is the approved IEEE standard.

Official statements

A statement, written or oral, that is not processed in accordance with the IEEE SA Standards Board Operations Manual shall not be considered or inferred to be the official position of IEEE or any of its committees and shall not be considered to be, nor be relied upon as, a formal position of IEEE. At lectures, symposia, seminars, or educational courses, an individual presenting information on IEEE standards shall make it clear that the presenter's views should be considered the personal views of that individual rather than the formal position of IEEE, IEEE SA, the Standards Committee, or the Working Group.

Comments on standards

Comments for revision of IEEE Standards documents are welcome from any interested party, regardless of membership affiliation with IEEE or IEEE SA. However, **IEEE does not provide interpretations, consulting information, or advice pertaining to IEEE Standards documents**.

Suggestions for changes in documents should be in the form of a proposed change of text, together with appropriate supporting comments. Since IEEE standards represent a consensus of concerned interests, it is important that any responses to comments and questions also receive the concurrence of a balance of interests. For this reason, IEEE and the members of its Societies and Standards Coordinating Committees are not able to provide an instant response to comments, or questions except in those cases where the matter has previously been addressed. For the same reason, IEEE does not respond to interpretation requests. Any person who would like to participate in evaluating comments or in revisions to an IEEE standard is welcome to join the relevant IEEE working group. You can indicate interest in a working group using the Interests tab in the Manage Profile and Interests area of the IEEE SA myProject system. An IEEE Account is needed to access the application.

Comments on standards should be submitted using the Contact Us form.

Laws and regulations

Users of IEEE Standards documents should consult all applicable laws and regulations. Compliance with the provisions of any IEEE Standards document does not constitute compliance to any applicable regulatory requirements. Implementers of the standard are responsible for observing or referring to the applicable regulatory requirements. IEEE does not, by the publication of its standards, intend to urge action that is not in compliance with applicable laws, and these documents may not be construed as doing so.

Data privacy

Users of IEEE Standards documents should evaluate the standards for considerations of data privacy and data ownership in the context of assessing and using the standards in compliance with applicable laws and regulations.

Copyrights

IEEE draft and approved standards are copyrighted by IEEE under US and international copyright laws. They are made available by IEEE and are adopted for a wide variety of both public and private uses. These include both use, by reference, in laws and regulations, and use in private self-regulation, standardization, and the promotion of engineering practices and methods. By making these documents available for use and adoption by public authorities and private users, IEEE does not waive any rights in copyright to the documents.

Photocopies

Subject to payment of the appropriate licensing fees, IEEE will grant users a limited, non-exclusive license to photocopy portions of any individual standard for company or organizational internal use or individual, non-commercial use only. To arrange for payment of licensing fees, please contact Copyright Clearance Center, Customer Service, 222 Rosewood Drive, Danvers, MA 01923 USA; +1 978 750 8400; https://www.copyright.com/. Permission to photocopy portions of any individual standard for educational classroom use can also be obtained through the Copyright Clearance Center.

Updating of IEEE Standards documents

Users of IEEE Standards documents should be aware that these documents may be superseded at any time by the issuance of new editions or may be amended from time to time through the issuance of amendments, corrigenda, or errata. An official IEEE document at any point in time consists of the current edition of the document together with any amendments, corrigenda, or errata then in effect.

Every IEEE standard is subjected to review at least every 10 years. When a document is more than 10 years old and has not undergone a revision process, it is reasonable to conclude that its contents, although still of some value, do not wholly reflect the present state of the art. Users are cautioned to check to determine that they have the latest edition of any IEEE standard.

In order to determine whether a given document is the current edition and whether it has been amended through the issuance of amendments, corrigenda, or errata, visit IEEE Xplore or contact IEEE. For more information about the IEEE SA or IEEE's standards development process, visit the IEEE SA Website.

Errata

Errata, if any, for all IEEE standards can be accessed on the IEEE SA Website. Search for standard number and year of approval to access the web page of the published standard. Errata links are located under the Additional Resources Details section. Errata are also available in IEEE Xplore. Users are encouraged to periodically check for errata.

Patents

IEEE Standards are developed in compliance with the IEEE SA Patent Policy.

Attention is called to the possibility that implementation of this standard may require use of subject matter covered by patent rights. By publication of this standard, no position is taken by the IEEE with respect to the existence or validity of any patent rights in connection therewith. If a patent holder or patent applicant has filed a statement of assurance via an Accepted Letter of Assurance, then the statement is listed on the IEEE SA Website at https://standards.ieee.org/about/sasb/patcom/patents.html. Letters of Assurance may indicate whether the Submitter is willing or unwilling to grant licenses under patent rights without compensation or under reasonable rates, with reasonable terms and conditions that are demonstrably free of any unfair discrimination to applicants desiring to obtain such licenses.

Essential Patent Claims may exist for which a Letter of Assurance has not been received. The IEEE is not responsible for identifying Essential Patent Claims for which a license may be required, for conducting inquiries into the legal validity or scope of Patents Claims, or determining whether any licensing terms or conditions provided in connection with submission of a Letter of Assurance, if any, or in any licensing agreements are reasonable or non-discriminatory. Users of this standard are expressly advised that determination of the validity of any patent rights, and the risk of infringement of such rights, is entirely their own responsibility. Further information may be obtained from the IEEE Standards Association.

IMPORTANT NOTICE

IEEE Standards do not guarantee or ensure safety, security, health, or environmental protection, or ensure against interference with or from other devices or networks. IEEE Standards development activities consider research and information presented to the standards development group in developing any safety recommendations. Other information about safety practices, changes in technology or technology implementation, or impact by peripheral systems also may be pertinent to safety considerations during implementation of the standard. Implementers and users of IEEE Standards documents are responsible for determining and complying with all appropriate safety, security, environmental, health, and interference protection practices and all applicable laws and regulations.

Participants

At the time this guide was completed, the Fittings of Thermal-Resistance Conductor Working Group had the following entity membership:

Zhoulong Zhou, *Chair*
Hong Ying, *Vice Chair*
Ge Zheng, *Secretary*

Organization Represented	*Name of Representative*
China Datang Corporation	Feng Liu
China Jiliang University	Pengyue Zhang
Far East Smarter Energy, Co., Ltd.	Jing Xu
Gulifa Group Co., Ltd.	Zhe Zheng
Hogn Electric Group Co., Ltd.	Boyang Lin
Jiangsu Jiameng Electrical Equipment Co., Ltd.	Xiaofeng Shi
North China Electric Power University	Yunpeng Liu
Phoenix Electric Power Co., Ltd.	Taixi Ye
Shanghai Jiaotong University	Yi Yin
Southwest Jiaotong University	Yujun Guo
State Grid Corporation of China (SGCC)	Hong Ying
Tianjin University	Jin Li
Yonggu Group Corporation Co., Ltd.	Ge Zheng
Zuoyi Power Equipment Co., Ltd.	Zhoulong Zhou

The Working Group gratefully acknowledges the contributions of the following participants. Without their assistance and dedication, this guide would not have been completed.

Kangxi Cao
Hao Chen
Jie Chen
Min Chen
Yong Cheng
Yibo Gao
Dazheng Gu
Shilong Huang
Longji Li
Rui Li
Yongfu Li
Zhijian Li
Zhiwei Li
Hucheng Liang
Yin Liang
Lin Lin
Hui Liu
Heng Ma
Qingqiang Ma
Jiansheng Ni
Ke Qian
Liqun Qian
Miao Qian
Baoxing Shen
Pengxian Song
Yanjun Sun
Yu Sun
Jiajing Wang
Feifei Xia
Song Xiao
Huafeng Xu
Yan Xu
Dilong Xue
Tao Yang
Hongda Zhang

The following members of the entity Standards Association balloting group voted on this guide. Balloters may have voted for approval, disapproval, or abstention.

0xSenses Corporation
China Jiliang University
Far East Smarter Energy Co., Ltd.
Georgia Institute of Technology
Gulifa Group Co., Ltd.
Hongguang Electric Group Co., Ltd.
Jiangsu Jiameng Electrical Equipment Co., Ltd.
North China Electric Power University
Phoenix Electric Power Co., Ltd.
Shanghai Jiaotong University
Southwest Jiaotong University
State Grid Corporation of China (SGCC)
Tianjin University
Yonggu Group Corporation Co., Ltd.
Zuoyi Power Equipment Co., Ltd.

When the IEEE SA Standards Board approved this guide on 9 February 2022, it had the following membership.

David J. Law, *Chair*
Vacant Position, *Vice Chair*
Gary Hoffman, *Past Chair*
Konstantinos Karachalios, *Secretary*

Edward A. Addy
Ted Burse
Ramy Ahmed Fathy
J. Travis Griffith
Guido R. Hiertz
Yousef Kimiagar
Joseph L. Koepfinger*
Thomas Koshy
John D. Kulick
Johnny Daozhuang Lin
Kevin Lu
Daleep C. Mohla
Andrew Myles
Damir Novosel
Annette D. Reilly
Robby Robson
Jon Walter Rosdahl
Mark Siira
Dorothy V. Stanley
Lei Wang
F. Keith Waters
Karl Weber
Sha Wei
Philip B. Winston
Daidi Zhong

*Member Emeritus

Introduction

This introduction is not part of IEEE Std 2870-2022, IEEE Guide for Grip Test Method Guide for Fittings of High-Temperature, Low-Sag Overhead Conductor Under Tension and Electric Current Co-Effect.

It should be stressed that, although the test methods recommended in this document are suitable for the operation of most high-temperature, low-sag overhead conductors, they do not necessarily apply to excessive vibration. The tests in this document may need to be supplemented by special tests agreed upon between supplier and purchaser.

This guide utilizes feedback from manufacturers and users.

Contents

1. Overview 11
   1.1 Scope 11
   1.2 Purpose 11
   1.3 Word usage 11

2. Normative references 12

3. Definitions, acronyms, and abbreviations 12
   3.1 Definitions 12
   3.2 Acronyms and abbreviations 13

4. Test conditions 13

5. Test equipment 13

6. Sample preparation 14

7. Test 15
   7.1 Grip strength test at ambient temperature 15
   7.2 Grip strength test at high temperature 16
   7.3 Grip strength test after high temperature cycling 19

8. Type test 20
   8.1 Grip strength test at ambient temperature 20
   8.2 Grip strength test after high sustained temperature 21
   8.3 Grip strength test after large mechanical sustained load 22

IEEE Guide for Grip Test Method for Fittings of High-Temperature, Low-Sag Overhead Conductor Under Tension and Electric Current Co-Effect

1. Overview

1.1 Scope

This guide introduces the grip strength test method for fittings of high-temperature, low-sag overhead conductors with long-term operating temperature of between 90 °C and 250 °C in the co-effect of the tension and the current.

1.2 Purpose

This guide provides the test methods to verify the reliability of the grip of fittings at normal temperature, at high temperature, and after high temperature cycling of high-temperature conductors with a long-term operating temperature between 90 °C and 250 °C. This guide is a resource for conductor and fitting manufacturers and installers for technical information to improve the reliability of the high-temperature, low-sag overhead conductors and electric power fittings during installation and operation.

1.3 Word usage

The word *shall* indicates mandatory requirements strictly to be followed in order to conform to the standard and from which no deviation is permitted (*shall* equals is *required to*).[1,2]

The word *should* indicates that among several possibilities one is recommended as particularly suitable, without mentioning or excluding others; or that a certain course of action is preferred but not necessarily required (*should* equals is *recommended that*).

The word *may* is used to indicate a course of action permissible within the limits of the standard (*may* equals is *permitted to*).

The word *can* is used for statements of possibility and capability, whether material, physical, or causal (*can* equals is *able to*).

[1]The use of the word must is deprecated and cannot be used when stating mandatory requirements, must is used only to describe unavoidable situations.
[2]The use of will is deprecated and cannot be used when stating mandatory requirements, will is only used in statements of fact.

2. Normative references

The following referenced documents are indispensable for the application of this document (i.e., they must be understood and used, so each referenced document is cited in text and its relationship to this document is explained). For dated references, only the edition cited applies. For undated references, the latest edition of the referenced document (including any amendments or corrigenda) applies.

ANSI C119.4, Electric Connectors-Connectors for Use Between Aluminum-to-Aluminum and Aluminum-to-Copper Conductors Designed for Normal Operation at or Below 93 °C and Copper-to-Copper Conductors Designed for Normal Operation at or Below 100 °C.

IEC 60060-1, High-voltage test techniques-Part 1: General definitions and test requirements.

IEC 61089, Round wire concentric lay overhead electrical stranded conductors.

IEC 61284, Overhead lines—Requirements and tests for fittings.

IEC 62219, Overhead electrical conductors—Formed wire, concentric lay, stranded conductors.

IEC 62420, Concentric lay stranded overhead electrical conductors containing one or more gap(s).

IEEE Std 1283™, IEEE Guide for Determining the Effects of High-Temperature Operation on Conductors, Connectors, and Accessories.

3. Definitions, acronyms, and abbreviations

3.1 Definitions

For the purposes of this document, the following terms and definitions apply. The *IEEE Standards Dictionary Online* should be consulted for terms not defined in this clause.[3]

combination of conductors and electric power fittings (combination): The conductors and the electric power fittings are connected as a whole by mechanical means and can withstand all mechanical and electrical loads.

conductor tensile strength at rated temperature: The overall mechanical load (provided by the test consigner) that the conductor can carry at rated temperature. When the high-temperature low-sag conductor operates at rated temperature, the material with the smallest thermal expansion coefficient usually carries all the mechanical load.

current carrying capacity: Under specified conditions, the maximum current that the conductor can continuously carry without causing its steady state temperature to exceed the rated temperature.

electric power fittings: Metal accessories that connect and combine various devices in the power system to transfer mechanical and/or electrical loads and provide some protection.

NOTE—Electrical power fittings covered in this guide: tension clamp and splicing sleeve.

grip strength: The maximum mechanical load without relative slip.

[3]IEEE Standards Dictionary Online is available at: http://dictionary.ieee.org. An IEEE account is required for access to the dictionary, and one can be created at no charge on the dictionary sign-in page.

high-temperature, low-sag overhead conductor (HTLS): Conductors typically formulated with either standard aluminum strands, fully annealed aluminum or aluminum alloys, which resist annealing at 250 °C or greater, or the part that bears the main mechanical load, which is made of material with small coefficient of thermal expansion.

rated temperature: The maximum allowable temperature of conductor, or the temperature specified by the test consigner.

slip: After applying a load to the combination, it is regarded as slip when the pulling force cannot be increased or the clamp on the conductor moves beyond the specified displacement.

splicing sleeve: The metal pipe fitting used to connect two conductors to extend their length and can meet the mechanical and electrical performance requirements.

steady state temperature: The state under which the conductor temperature variation does not exceed 2 °C within 15 min.

temperature rise: The difference between the temperature at a point and the reference temperature.

tension clamp: An electric power fitting that is used to secure terminals of conductors and carry the full tensile load of conductors.

test consigner: It can be the producer or the purchaser or the transmission line builder, or a combination of the parties mentioned above.

test current: The current that results in a target temperature at steady state.

3.2 Acronyms and abbreviations

RTS	rated tensile strength of the conductor

4. Test conditions

The test shall be carried out at a laboratory temperature between 15 °C and 30 °C and at an ambient humidity of no greater than 80%.

All tests shall be carried out at ambient temperature unless otherwise stated in this standard.

The power quality of the test current shall meet the requirements of IEC 60060-1.

Equipment that may generate heat sources, such as current generators and transformers, may be isolated in the laboratory.

Magnetic materials may be kept 0.5 m away from the periphery of the samples.

5. Test equipment

Test equipment may include a horizontal tensile tester, a current generator, a current measuring device, a temperature measuring device, a humidity measuring device, an anemometer, auxiliary conductors for testing, etc.

Test equipment may be separate components or integrated.

The accuracy of the force measurement of the horizontal tensile tester shall be 1.5% or better.

The horizontal tensile tester may have a tensile rate of 30 mm/min~150 mm/min or 5.0 kN/min~7.5 kN/min. The tensile tester may have enough effective testing space.

The current test device includes a current generator and a current measuring device. The current measurement can be carried out using current transformer (ac) or current sensor (dc). The accuracy of the current transformer and current sensor shall be 1% or better. The accuracy of the ammeter shall be 1% or better.

Tests may be carried out with ac. The deviation between the operating frequency and the nominal frequency may be within ±1 Hz.

NOTE—DC current may be used only in consultation with the test consigner.

Temperature may be measured by using a thermocouple or other suitable sensor with whose maximum permissible error does not exceed 0.5 °C.

Humidity may be measured by a hygristor, humicap, or other suitable sensor with maximum permissible error not exceeding ±5% relative humidity (RH).

The resolution of an anemometer may be up to 0.1 m/s.

Test equipment may be calibrated or verified by qualified measuring organizations.

6. Sample preparation

The high-temperature, low-sag overhead conductors for testing shall meet the requirements of IEC 61089, IEC 62219, IEC 62420, IEEE Std 1283™, ANSI C119.4, or the local standards, as well as the technical requirements agreed upon by the conductor manufacturer and the purchaser.

Tension clamps or splicing sleeves for testing shall meet the requirements in IEC 61284 as well as the technical requirements agreed upon by the conductor manufacturer and the purchaser.

The test consigner provides test samples that have not been used.

Cut a conductor into four segments and the length of each segment include the effective length (L) and the length in the fittings. Three segments are used as samples of conductors for testing, and the other one is used as spare sample. Assemble conductors and connectors as shown in Figure 1a) for two tension clamps, or Figure 1b) for two tension clamps and one splice. The length between connectors (L) of the conductor shall be at least 100 times the conductor diameter or 2.5 m, whichever is longer. (Note the total length of the conductor needs to include the length of the conductor inside the connectors.)

The number of samples such as tension clamp or splicing sleeve used in the test may meet the form of combination of conductor and fittings, as shown in Figure 1.

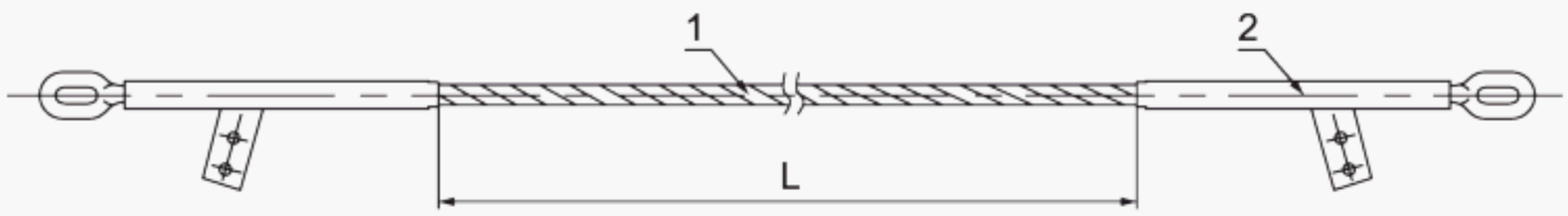

1-Conductor
2-Tension clamp

a) A combination of conductor and tension clamp

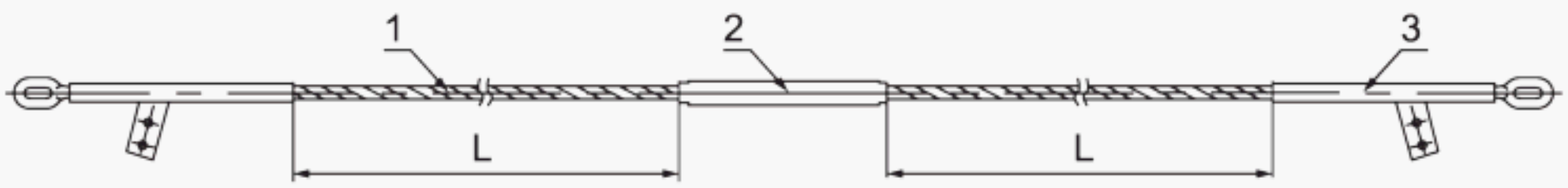

1-Conductor
2-Splicing sleeve
3-Tension clamp

b) A combination of conductor, tension clamp and splicing sleeve

Figure 1—A combination of conductors and electric power fittings

The conductor, tension clamp, or splicing sleeve is installed as a combination in accordance with the manufacturer's installation instructions or the work instruction of the transmission line.

The auxiliary conductors used in the test shall be consistent with the conductor of the combination.

7. Test

7.1 Grip strength test at ambient temperature

7.1.1 Test layout

Take a prepared combination sample and install it in the horizontal tensile testing machine. The test arrangement is shown in Figure 2.

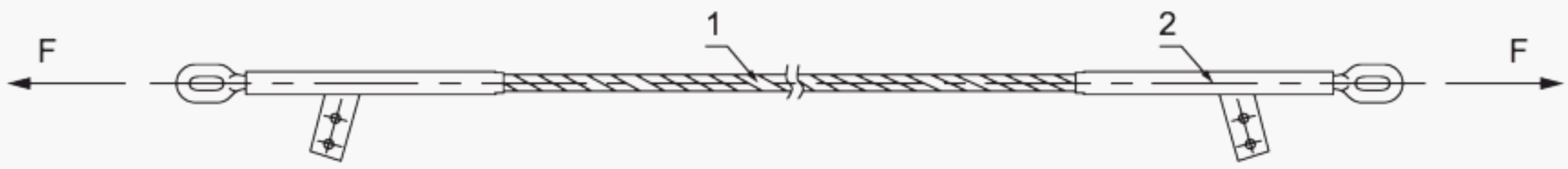

1-Conductor
2-Tension clamp

a) A combination of conductor and tension clamp

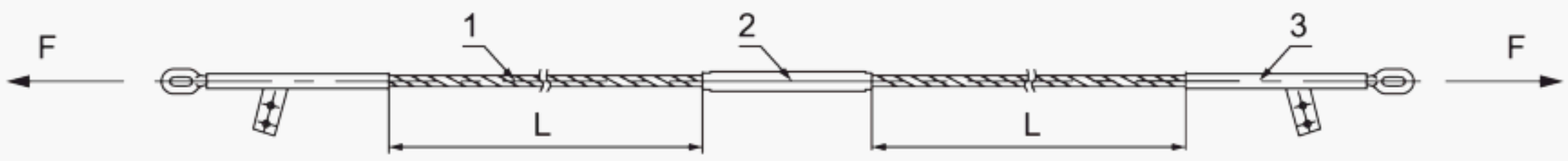

1-Conductor
2-Splicing sleeve
3-Tension clamp

b) A combination of conductor, tension clamp and splicing sleeve

Figure 2—Arrangement of grip strength test at ambient temperature

7.1.2 Test procedure

The procedure of the grip strength test at ambient temperature is as follows:

a) Apply an initial tension to the combination sample and hold for 60 s. The initial tension is 20% of the RTS. Make a circular mark on the surface of the conductor close to the mouth of the tension clamp (or splicing sleeve). The mark will show slip of the conductor relative to the fittings.

b) Increase the tension gradually to 50% of the rated tensile strength of the conductor, within at least 30 s and hold for 120 s.

c) Increase the tension gradually to 95% of the RTS within 30 s to 120 s and hold for 60 s.

NOTE—The test consigner may specify the tension.

d) Reduce the tension and inspect the mark.

7.1.3 Criteria condition

One combination sample is required for this test. The test passes if no slip is observed and the conductors are not damaged.

NOTE—After a combination sample passing the test in 7.1, install other combination samples. If the first set of combination sample fails to pass the test in 7.1, install the spare combination sample and test again until the combination sample passes the test in 7.1 or the spare sample is used up.

7.2 Grip strength test at high temperature

7.2.1 Test layout

Take a prepared combination sample and install it in the horizontal tensile testing machine. Connect the tension clamps at both ends of the combination sample to the current generating device through auxiliary conductors. The test arrangement is shown in Figure 3.

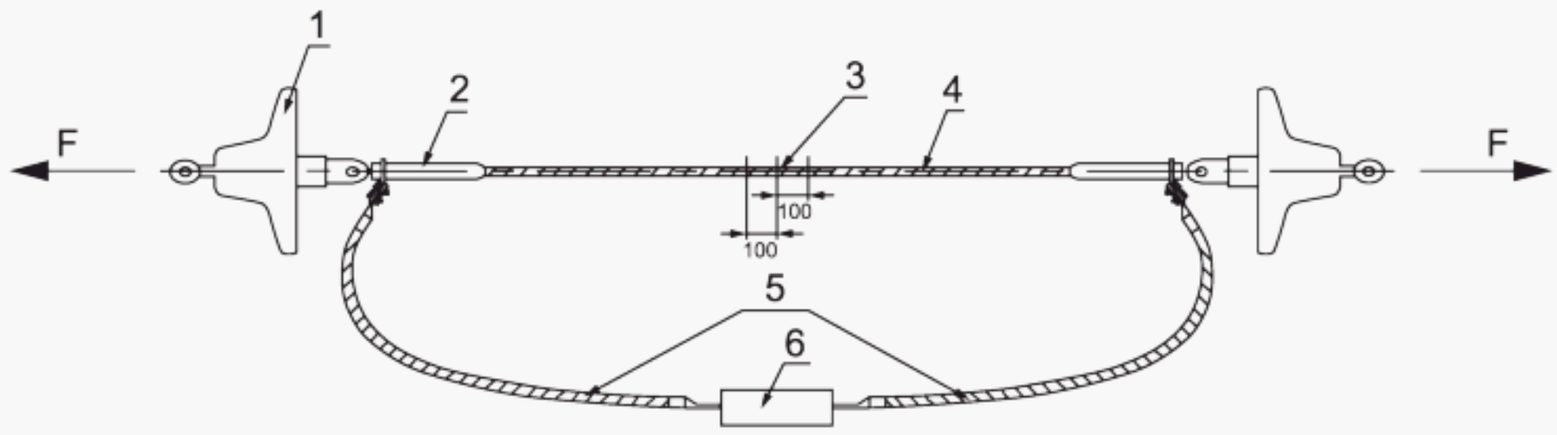

1-Insulator
2-Tension clamp
3-Temperature measuring point
4-Conductor
5-Auxiliary conductors
6-Current generating device

a) A combination of conductor and tension clamp

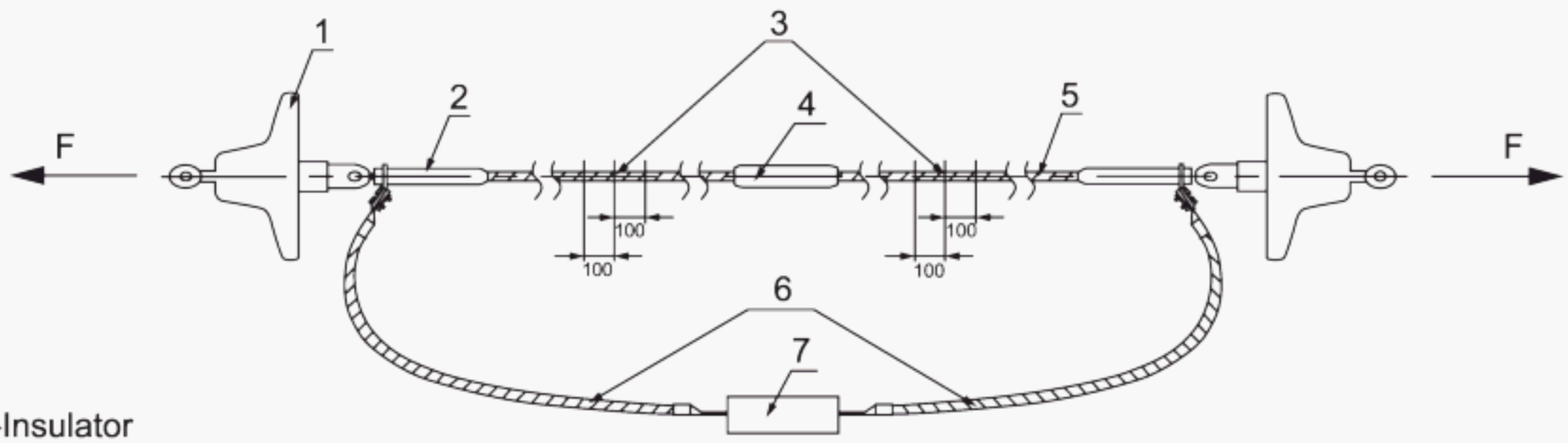

1-Insulator
2-Tension clamp
3-Temperature measuring point
4-Splicing sleeve
5-Conductor
6-Auxiliary conductors
7-Current generating device

b) A combination of conductor, tension clamp and splicing sleeve

Figure 3—Arrangement of grip strength test at high temperature

a) Apply an initial tension (20% of the rated tensile strength of the conductor) and hold for 60 s. Make a circular mark on the surface of the conductor close to the outlet of the tension clamp (or splicing sleeve) to measure the slip of the conductor relative to the fittings.

b) The conductor temperature measuring point is located at the midpoint of the conductor to be tested and 100 mm from the left and right sides of the midpoint. The temperature sensor may be placed close to the conductor surface or in the outer wire strands of the conductor and be fixed reliably. See Figure 3.

c) Set the current transformer for the test current.

d) Arrangement of ambient temperature measuring points and wind speed measuring points: two ambient temperature measuring points are arranged on both sides of the conductor, and one wind speed measuring point is arranged on one side, which is located at 1 m outside the test circuit, keeping the same height with the conductor.

7.2.2 Test procedure

Test procedure of grip strength at high temperature is shown in Figure 4.

7.2.2.1 Heating process

When the current is applied to the test circuit to raise the temperature, the heating process is as follows:

a) Apply current to the test circuit to raise the conductor temperature to the rated temperature and steady state.

NOTE—The conductor temperature is the average value of the readings at three temperature measurement points.

b) An initial current up to 1.5 times the steady current is permitted. The recommended minimum time of initial current is shown in Table 1.

Table 1—Recommended minimum time of initial current

Nominal cross-sectional area of conductor (S) (mm^2)	$120 \leq S \leq 185$	$185 < S \leq 400$	$400 < S \leq 630$	$S > 630$
Time (min)	5	10	15	20

c) During the heating process, when the conductor temperature is close to the rated temperature, the current value can be appropriately reduced to the test current to make it reach the rated temperature slowly.

7.2.2.2 Constant temperature process

When the sample temperature reaches a steady state, the constant temperature process is as follows:

a) Hold the temperature at steady state for 30 min.

b) If at any time steady state temperature cannot be maintained, the 30 min period restarts.

c) After reaching the constant temperature time, measure and record the test data (conductor rated temperature, ambient temperature, test current, wind speed, time, etc.).

7.2.2.3 Tension loading process

The tension loading process is as follows:

a) Hold the steady state temperature after completing the procedure in 7.2.2.2. Increase the tension gradually to 50% of the conductor rated tensile strength at rated temperature within 30 s to 120 s, and hold for 120 s.

b) Increase the tension gradually to 80% of the rated tensile strength of the conductor within 30 s to 120 s, and hold for 60 s.

NOTE—The test consigner may specify the tension.

c) Reduce the tension and inspect the mark.

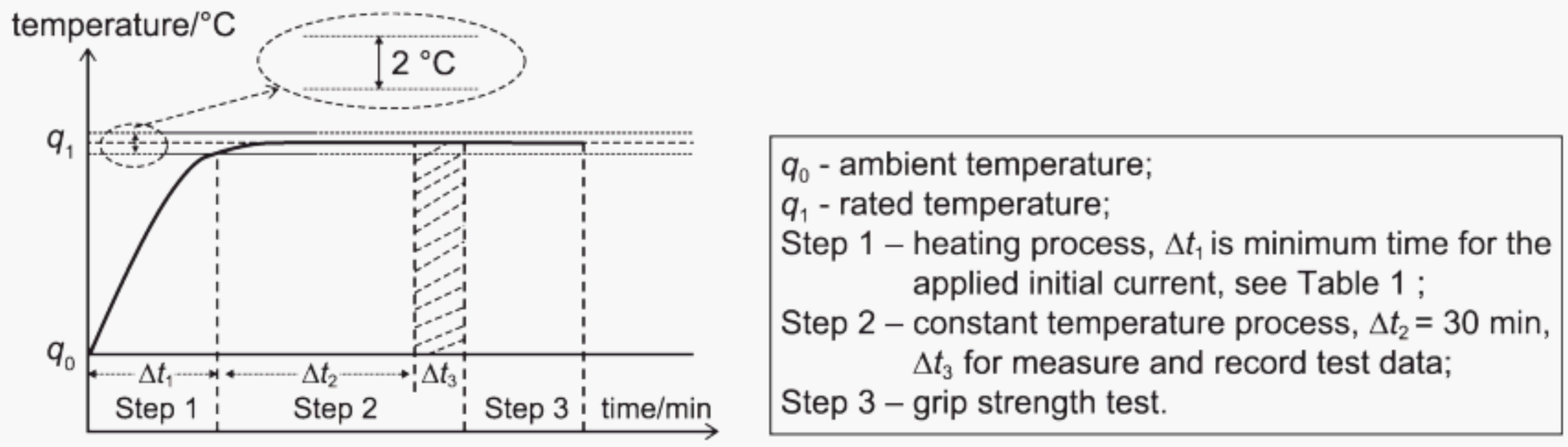

Figure 4—Grip strength test process at high temperature

7.2.2.4 Criteria condition

One combination sample is required for this test. The test passes if no slip is observed and the conductors are not damaged.

NOTE—After a combination sample passing the test in 7.2, install other combination samples. If the first set of combination sample fails to pass the test in 7.2, install the spare combination sample and test again until the combination sample passes the test in 7.2 or the spare samples are used.

7.3 Grip strength test after high temperature cycling

7.3.1 Test arrangement

Test arrangement is as specified in 7.2.1.

7.3.2 Test procedure

7.3.2.1 Heating process

Heating process is as specified in 7.2.2.1.

7.3.2.2 Constant temperature process

Constant temperature process is as specified in 7.2.2.2.

7.3.2.3 Cooling process

The cooling process of the test may be in accordance with the following requirements:

a) At the end of the constant temperature process, the current is cut off and the conductor is allowed to cool to within ambient temperature +5 °C. Forced convection cooling is allowed.

b) When the conductor temperature is cooled to within +5 °C of ambient temperature, forced convection cooling may be stopped, and the conductor will continue cooling for not less than 30 min before another test is started.

7.3.2.4 Cycling process

Repeat the whole test three times according to 7.3.2.1, 7.3.2.2, and 7.3.2.3. The detailed cycle is shown in Figure 5. The test consigner may specify the number of cycles. In case of abnormal conditions, the test may be restarted.

7.3.2.5 Tension loading process

The tension loading process is as follows:

a) When the test sample has been exposed to three or more cycles and the conductor is stabilized at the ambient temperature, the tension is gradually increased to 50% of the RTS within 30 s to 120 s, and held for 120 s.

b) Within 30 s to 120 s, the tension is gradually increased to 95% of the RTS and hold for 60 s.

NOTE—The test consigner may specify the tension.

c) Reduce the tension and inspect the mark.

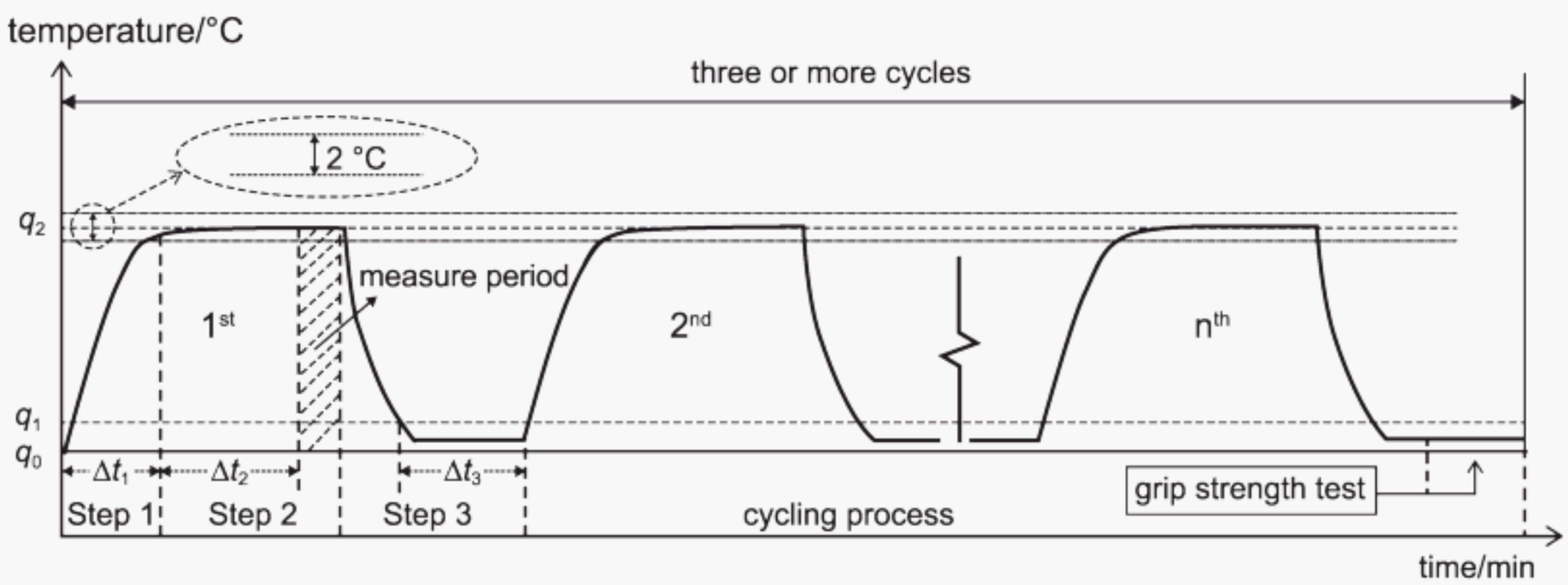

q_0 - ambient temperature;
q_1 - ambient temperature +5 °C;
q_2 - rated temperature;
Step 1 – heating process, Δt_1 is minimum time for the applied initial current, see Table 1 ;
Step 2 – constant temperature process, Δt_2 = 30 min;
Step 3 – cooling process, Δt_3 is not less than 30 min.

Figure 5—Grip strength test process after high temperature cycling

7.3.2.6 Criteria condition

One combination sample is required for this test. The test passes if no slip is observed and the conductors are not damaged.

NOTE—After a combination sample passing the test in 7.3, install other combination samples. If the first set of combination sample fails to pass the test in 7.3, install the spare combination sample and test again until the combination sample passes the test in 7.3 or the spare sample is used up.

8. Type test

8.1 Grip strength test at ambient temperature

8.1.1 Test layout

Test arrangement is as specified in 7.1.1.

8.1.2 Test procedure

Test procedure is as specified in 7.1.2.

8.1.3 Criteria condition

One combination sample is required for this test. The test passes if no slip is observed and the conductors are not damaged.

NOTE—After a combination sample passing the test in 8.1, install other combination samples. If the first set of combination sample fails to pass the test in 8.1, install the spare combination sample and test again until the combination sample passes the test in 8.1 or the spare sample is used up.

8.2 Grip strength test after high sustained temperature

8.2.1 Test layout

Test arrangement is as specified in 7.2.1.

8.2.2 Test procedure

8.2.2.1 Heating process

Heating process is as specified in 7.2.2.1.

8.2.2.2 Constant temperature process

When the sample temperature reaches a steady state, the constant temperature process is as follows:

a) Hold the temperature at steady state for 168 h.

b) If at any time steady state temperature cannot be maintained, the 168 h period restarts.

c) After reaching the constant temperature time, measure and record the test data (conductor rated temperature, ambient temperature, test current, wind speed, time, etc.).

8.2.2.3 Tension loading process

The tension loading process is as follows:

a) Hold the steady state temperature per procedures outlined in 8.2.2.2. Increase the tension gradually to 50% of the conductor rated tensile strength at rated temperature within 30 s to 120 s and held for 120 s.

b) Increase the tension gradually to 80% of the conductor rated tensile strength at rated temperature within 30 s to 120 s and hold for 60 s.

NOTE—The test consigner may specify the tension.

c) Reduce the tension and inspect the mark.

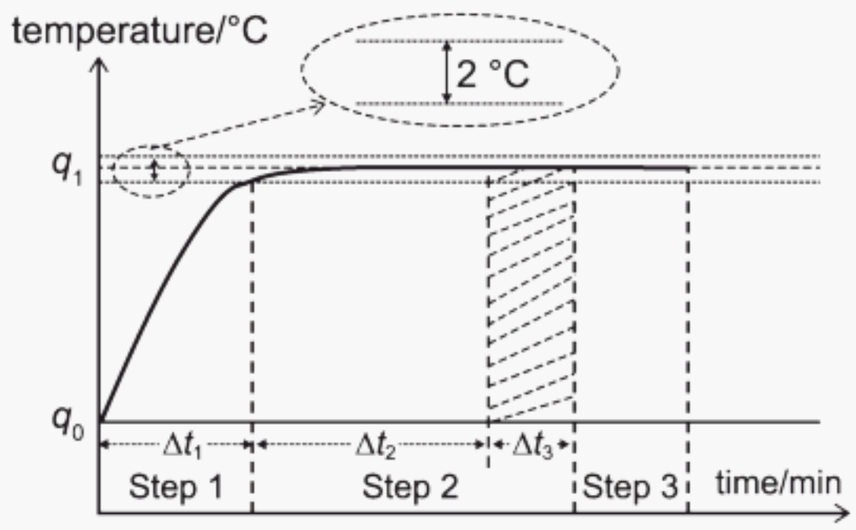

q_0 - ambient temperature;
q_1 - rated temperature ;
Step 1 – heating process, Δt_1 is minimum time for the applied initial current, see Table 1 ;
Step 2 – constant temperature process, Δt_2 = 168 h, Δt_3 for measure and record test data;
Step 3 – Tension loading process.

Figure 6—Grip strength test process at high temperature for type test

8.2.2.4 Criteria condition

One combination sample is required for this test. The test passes if no slip is observed and the conductors are not damaged.

NOTE—After a combination sample passing the test in 8.2, install other combination samples. If the first set of combination sample fails to pass the test in 8.2, install the spare combination sample and test again until the combination sample passes the test in 8.2 or the spare sample is used up.

8.3 Grip strength test after large mechanical sustained load

8.3.1 Test arrangement

Test arrangement is as specified in 7.1.1.

8.3.2 Test procedure

The procedure of grip strength test after large mechanical sustained load is as follows:

a) Apply an initial tension to the combination sample and hold for 60 s. The initial tension is 20% of the RTS. Make a circular mark on the surface of the conductor close to the mouth of the tension clamp (or splicing sleeve). The mark will show slip of the conductor relative to the fittings.

b) Increase the tension gradually to 50% of the RTS at least 30 s and hold for 168 h.

c) Increase the tension gradually to 95% of the RTS within 30 s to 120 s and hold for 60 s.

NOTE—The test consigner may specify the tension.

d) Reduce the tension and inspect the mark.

The detailed test procedure is shown in Figure 7.

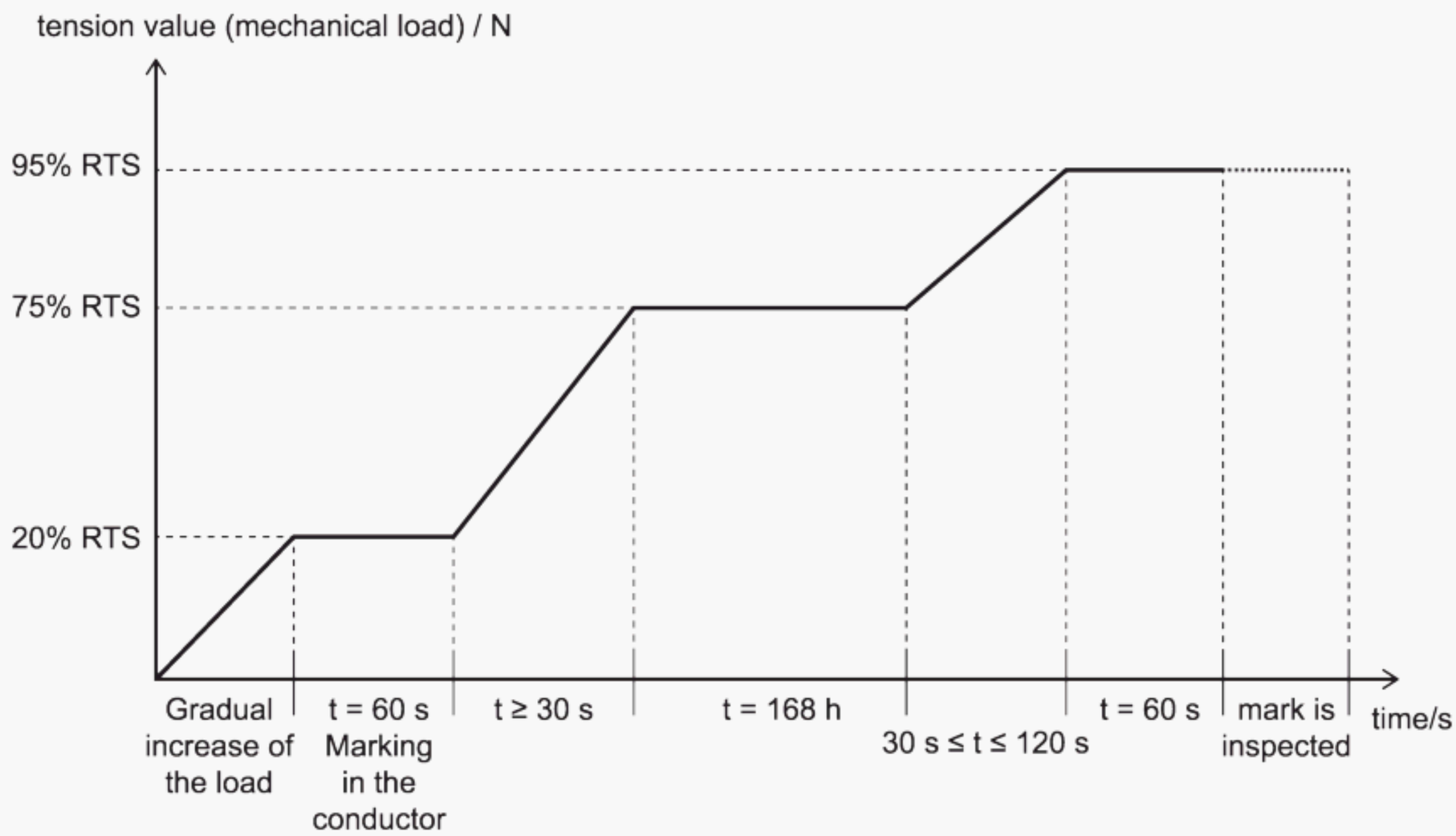

Figure 7—Grip strength test process after high temperature cycling for type test

8.3.2.1 Criteria condition

One combination sample is required for this test. The test passes if no slip is observed and the conductors are not damaged.

NOTE—After a combination sample passing the test in 8.3, install other combination samples. If the first set of combination sample fails to pass the test in 8.3, install the spare combination sample and test again until the combination sample passes the test in 8.3 or the spare sample is used.

IEEE SA
STANDARDS ASSOCIATION

RAISING THE WORLD'S STANDARDS

Connect with us on:

Twitter: twitter.com/ieeesa
Facebook: facebook.com/ieeesa
LinkedIn: linkedin.com/groups/1791118
Beyond Standards blog: beyondstandards.ieee.org
YouTube: youtube.com/ieeesa

standards.ieee.org
Phone: +1 732 981 0060

IEEE