IEEE SA
STANDARDS ASSOCIATION

IEEE Guide for Rail Potential Management for DC Electrification Systems

IEEE Vehicular Technology Society

Developed by the
Rail Transportation Standards Committee

IEEE Std 2720™-2021

IEEE

IEEE STANDARDS

IEEE Std 2720™-2021

IEEE Guide for Rail Potential Management for DC Electrification Systems

Developed by the

Rail Transportation Standards Committee
of the
IEEE Vehicular Technology Society

Approved 28 April 2021

IEEE SA Standards Board

Important Notices and Disclaimers Concerning IEEE Standards Documents

IEEE Standards documents are made available for use subject to important notices and legal disclaimers. These notices and disclaimers, or a reference to this page (https://standards.ieee.org/ipr/disclaimers.html), appear in all standards and may be found under the heading "Important Notices and Disclaimers Concerning IEEE Standards Documents."

Notice and Disclaimer of Liability Concerning the Use of IEEE Standards Documents

IEEE Standards documents are developed within the IEEE Societies and the Standards Coordinating Committees of the IEEE Standards Association (IEEE SA) Standards Board. IEEE develops its standards through an accredited consensus development process, which brings together volunteers representing varied viewpoints and interests to achieve the final product. IEEE Standards are documents developed by volunteers with scientific, academic, and industry-based expertise in technical working groups. Volunteers are not necessarily members of IEEE or IEEE SA, and participate without compensation from IEEE. While IEEE administers the process and establishes rules to promote fairness in the consensus development process, IEEE does not independently evaluate, test, or verify the accuracy of any of the information or the soundness of any judgments contained in its standards.

IEEE makes no warranties or representations concerning its standards, and expressly disclaims all warranties, express or implied, concerning this standard, including but not limited to the warranties of merchantability, fitness for a particular purpose and non-infringement. In addition, IEEE does not warrant or represent that the use of the material contained in its standards is free from patent infringement. IEEE standards documents are supplied "AS IS" and "WITH ALL FAULTS."

Use of an IEEE standard is wholly voluntary. The existence of an IEEE Standard does not imply that there are no other ways to produce, test, measure, purchase, market, or provide other goods and services related to the scope of the IEEE standard. Furthermore, the viewpoint expressed at the time a standard is approved and issued is subject to change brought about through developments in the state of the art and comments received from users of the standard.

In publishing and making its standards available, IEEE is not suggesting or rendering professional or other services for, or on behalf of, any person or entity, nor is IEEE undertaking to perform any duty owed by any other person or entity to another. Any person utilizing any IEEE Standards document, should rely upon his or her own independent judgment in the exercise of reasonable care in any given circumstances or, as appropriate, seek the advice of a competent professional in determining the appropriateness of a given IEEE standard.

IN NO EVENT SHALL IEEE BE LIABLE FOR ANY DIRECT, INDIRECT, INCIDENTAL, SPECIAL, EXEMPLARY, OR CONSEQUENTIAL DAMAGES (INCLUDING, BUT NOT LIMITED TO: THE NEED TO PROCURE SUBSTITUTE GOODS OR SERVICES; LOSS OF USE, DATA, OR PROFITS; OR BUSINESS INTERRUPTION) HOWEVER CAUSED AND ON ANY THEORY OF LIABILITY, WHETHER IN CONTRACT, STRICT LIABILITY, OR TORT (INCLUDING NEGLIGENCE OR OTHERWISE) ARISING IN ANY WAY OUT OF THE PUBLICATION, USE OF, OR RELIANCE UPON ANY STANDARD, EVEN IF ADVISED OF THE POSSIBILITY OF SUCH DAMAGE AND REGARDLESS OF WHETHER SUCH DAMAGE WAS FORESEEABLE.

Translations

The IEEE consensus development process involves the review of documents in English only. In the event that an IEEE standard is translated, only the English version published by IEEE is the approved IEEE standard.

Official statements

A statement, written or oral, that is not processed in accordance with the IEEE SA Standards Board Operations Manual shall not be considered or inferred to be the official position of IEEE or any of its committees and shall not be considered to be, nor be relied upon as, a formal position of IEEE. At lectures, symposia, seminars, or educational courses, an individual presenting information on IEEE standards shall make it clear that the presenter's views should be considered the personal views of that individual rather than the formal position of IEEE, IEEE SA, the Standards Committee, or the Working Group.

Comments on standards

Comments for revision of IEEE Standards documents are welcome from any interested party, regardless of membership affiliation with IEEE or IEEE SA. However, **IEEE does not provide interpretations, consulting information, or advice pertaining to IEEE Standards documents**.

Suggestions for changes in documents should be in the form of a proposed change of text, together with appropriate supporting comments. Since IEEE standards represent a consensus of concerned interests, it is important that any responses to comments and questions also receive the concurrence of a balance of interests. For this reason, IEEE and the members of its Societies and Standards Coordinating Committees are not able to provide an instant response to comments, or questions except in those cases where the matter has previously been addressed. For the same reason, IEEE does not respond to interpretation requests. Any person who would like to participate in evaluating comments or in revisions to an IEEE standard is welcome to join the relevant IEEE working group. You can indicate interest in a working group using the Interests tab in the Manage Profile & Interests area of the IEEE SA myProject system. An IEEE Account is needed to access the application.

Comments on standards should be submitted using the Contact Us form.

Laws and regulations

Users of IEEE Standards documents should consult all applicable laws and regulations. Compliance with the provisions of any IEEE Standards document does not constitute compliance to any applicable regulatory requirements. Implementers of the standard are responsible for observing or referring to the applicable regulatory requirements. IEEE does not, by the publication of its standards, intend to urge action that is not in compliance with applicable laws, and these documents may not be construed as doing so.

Data privacy

Users of IEEE Standards documents should evaluate the standards for considerations of data privacy and data ownership in the context of assessing and using the standards in compliance with applicable laws and regulations.

Copyrights

IEEE draft and approved standards are copyrighted by IEEE under US and international copyright laws. They are made available by IEEE and are adopted for a wide variety of both public and private uses. These include both use, by reference, in laws and regulations, and use in private self-regulation, standardization, and the promotion of engineering practices and methods. By making these documents available for use and adoption by public authorities and private users, IEEE does not waive any rights in copyright to the documents.

Photocopies

Subject to payment of the appropriate licensing fees, IEEE will grant users a limited, non-exclusive license to photocopy portions of any individual standard for company or organizational internal use or individual, non-commercial use only. To arrange for payment of licensing fees, please contact Copyright Clearance Center, Customer Service, 222 Rosewood Drive, Danvers, MA 01923 USA; +1 978 750 8400; https://www.copyright.com/. Permission to photocopy portions of any individual standard for educational classroom use can also be obtained through the Copyright Clearance Center.

Updating of IEEE Standards documents

Users of IEEE Standards documents should be aware that these documents may be superseded at any time by the issuance of new editions or may be amended from time to time through the issuance of amendments, corrigenda, or errata. An official IEEE document at any point in time consists of the current edition of the document together with any amendments, corrigenda, or errata then in effect.

Every IEEE standard is subjected to review at least every 10 years. When a document is more than 10 years old and has not undergone a revision process, it is reasonable to conclude that its contents, although still of some value, do not wholly reflect the present state of the art. Users are cautioned to check to determine that they have the latest edition of any IEEE standard.

In order to determine whether a given document is the current edition and whether it has been amended through the issuance of amendments, corrigenda, or errata, visit IEEE Xplore or contact IEEE. For more information about the IEEE SA or IEEE's standards development process, visit the IEEE SA Website.

Errata

Errata, if any, for all IEEE standards can be accessed on the IEEE SA Website. Search for standard number and year of approval to access the web page of the published standard. Errata links are located under the Additional Resources Details section. Errata are also available in IEEE Xplore. Users are encouraged to periodically check for errata.

Patents

IEEE Standards are developed in compliance with the IEEE SA Patent Policy.

Attention is called to the possibility that implementation of this standard may require use of subject matter covered by patent rights. By publication of this standard, no position is taken by the IEEE with respect to the existence or validity of any patent rights in connection therewith. If a patent holder or patent applicant has filed a statement of assurance via an Accepted Letter of Assurance, then the statement is listed on the IEEE SA Website at https://standards.ieee.org/about/sasb/patcom/patents.html. Letters of Assurance may indicate whether the Submitter is willing or unwilling to grant licenses under patent rights without compensation or under reasonable rates, with reasonable terms and conditions that are demonstrably free of any unfair discrimination to applicants desiring to obtain such licenses.

Essential Patent Claims may exist for which a Letter of Assurance has not been received. The IEEE is not responsible for identifying Essential Patent Claims for which a license may be required, for conducting inquiries into the legal validity or scope of Patents Claims, or determining whether any licensing terms or conditions provided in connection with submission of a Letter of Assurance, if any, or in any licensing agreements are reasonable or non-discriminatory. Users of this standard are expressly advised that determination of the validity of any patent rights, and the risk of infringement of such rights, is entirely their own responsibility. Further information may be obtained from the IEEE Standards Association.

IMPORTANT NOTICE

IEEE Standards do not guarantee or ensure safety, security, health, or environmental protection, or ensure against interference with or from other devices or networks. IEEE Standards development activities consider research and information presented to the standards development group in developing any safety recommendations. Other information about safety practices, changes in technology or technology implementation, or impact by peripheral systems also may be pertinent to safety considerations during implementation of the standard. Implementers and users of IEEE Standards documents are responsible for determining and complying with all appropriate safety, security, environmental, health, and interference protection practices and all applicable laws and regulations.

Participants

At the time this IEEE guide was completed, the Rail Potential Working Group had the following membership:

Ralph W. (Benjamin) Stell, *Chair*
Simon David Hetherington, *Vice Chair*

Ammar Alsarabi
Shyam Bista
Bill Brown
Michael Girdwood
Dimitrij Greco
Randall Groves
Buxuan Huang
Andrew Jones
Yung-chiang Lee
Leslie Lujum
Salvador Marquez
Reza Hessabi
Michael Natenzon
Moises Ramos
Shakti Sarai
Zhixue Zhang
Chen Zou
Ethan Kim
Judy Wu

The following members of the individual Standards Association balloting group voted on this guide. Balloters may have voted for approval, disapproval, or abstention.

Robert Aiello
William Aycock
Steven Bezner
Bill Brown
Yunxiang Chen
Yury Chikarov
Robert Fisher
Michael Girdwood
Simon Hetherington
Werner Hoelzl
Buxuan Huang
John John
Andrew Jones
Yuri Khersonsky
Thomas Li
P. Sivaraman
Patty Polpattana
Shakti Sarai
Suresh Shrimavle
Jeffrey Sisson
Gary Smullin
Ralph Stell
David Turner
John Vergis
Robert Wilson
Di (Judy) WU
Jian Yu
Yu Yuan

When the IEEE SA Standards Board approved this guide on 28 April 2021, it had the following membership:

Gary Hoffman, *Chair*
Jon Walter Rosdahl, *Vice Chair*
John D. Kulick, *Past Chair*
Konstantinos Karachalios, *Secretary*

Edward A. Addy
Doug Edwards
Ramy Ahmed Fathy
J.Travis Griffith
Thomas Koshy
Joseph L. Koepfinger*
David J. Law
Howard Li
Daozhuang Lin
Kevin Lu
Daleep C. Mohla
Chenhui Niu
Damir Novosel
Annette Reilly
Dorothy Stanley
Mehmet Ulema
Lei Wang
F.Keith Waters
Karl Weber
Sha Wei
Howard Wolfman
Daidi Zhong

*Member Emeritus

Introduction

This introduction is not part of IEEE Std 2720-2021, IEEE Guide for Rail Potential Management for DC Electrification Systems.

At the time this standard was developed, there were no directly-applicable standards, codes or guide documents in the USA that addressed permissible rail-to-ground voltages (rail potential) or the management of rail potential on dc-electrified rail transit systems. This guide provides a description of the concepts, applicable standards, and methods used for the calculation and management of rail potential on dc-electrified rail transit systems.

Contents

1. Overview 11
   1.1 Scope 11
   1.2 Purpose 11
   1.3 Word usage 11

2. Normative references 11

3. Definitions, acronyms, and abbreviations 12
   3.1 Definitions 12
   3.2 Acronyms and abbreviations 13

4. General 13

5. Review of Applicable Codes and Standards for Rail Potential 14
   5.1 General 14
   5.2 Review of National Codes and Standards 14
   5.3 IEEE Std 80 14
   5.4 Review of other codes and standards for rail potential 17
   5.5 European Standard BS EN 50122-1 18

6. Survey of rail potential policies and criteria for North American metro rail systems 21

7. Rail potential calculations 22
   7.1 General 22
   7.2 Distributed parameter (transmission line) equations 22
   7.3 Network solutions 23

8. Touch voltage calculations 25
   8.1 General 25
   8.2 Calculation 25
   8.3 Voltage exposure scenarios 25
   8.4 Person-to-railcar at station platform 25
   8.5 Person-to-railcar at station platform with platform edge doors/screens 26
   8.6 Person-to-railcar on right-of-way 26
   8.7 Person-to-track 27

9. Rail potential management 27
   9.1 General 27
   9.2 Substation spacing 27
   9.3 Track cross-bond spacing 27
   9.4 Supplemental negative return conductors 28
   9.5 System nominal voltage 28
   9.6 Regenerative braking 28
   9.7 Alternate system grounding methods 29
   9.8 Electrical isolation 29
   9.9 Platform de-icing materials 29
   9.10 Voltage-limiting devices 30
   9.11 Negative grounding devices (NGDs) 31

10. Rail potential management guidelines - summary 33
   10.1 Passive versus active rail potential management approaches 33
   10.2 Permissible voltages 34

Annex A (informative) Equivalent touch voltage circuits 35

Annex B (informative) DC electrical resistances for common running rail types 37

Annex C (informative) Bibliography 39

IEEE Guide for Rail Potential Management for DC Electrification Systems

1. Overview

1.1 Scope

This guide provides a description of the concepts, applicable standards, and methods used for the calculation and management of rail potential on dc-electrified rail transit systems.

1.2 Purpose

This guide describes existing methods, terminology, and additional references for the management of rail potential on dc-electrified rail transit systems.

1.3 Word usage

The word *shall* indicates mandatory requirements strictly to be followed in order to conform to the standard and from which no deviation is permitted (shall equals is required to).[1,2]

The word *should* indicates that among several possibilities one is recommended as particularly suitable, without mentioning or excluding others; or that a certain course of action is preferred but not necessarily required (should equals is recommended that).

The word *may* is used to indicate a course of action permissible within the limits of the standard (may equals is permitted to).

The word *can* is used for statements of possibility and capability, whether material, physical, or causal (can equals is able to).

2. Normative references

The following referenced documents are indispensable for the application of this document (i.e., they must be understood and used, so each referenced document is cited in text and its relationship to this document is

[1]The use of the word *must* is deprecated and cannot be used when stating mandatory requirements, *must* is used only to describe unavoidable situations.
[2]The use of *will* is deprecated and cannot be used when stating mandatory requirements, *will* is only used in statements of fact.

explained). For dated references, only the edition cited applies. For undated references, the latest edition of the referenced document (including any amendments or corrigenda) applies.

IEEE Std 80, IEEE Guide for Safety in ac Substation Grounding[3]

BS EN 50122-1, Railway applications—Fixed installations—Electrical safety, earthing and the return circuit, Part 1: Protective provisions against electric shock

IEC 62128-1, Railway applications—Fixed installations—Part 1: Protective provisions relating to electrical safety and earthing

IEC 60479-1, Effects of current on human being and livestock—Part 1: General aspects

IEC/TR 60479-5, Effects of current on human being and livestock—Part 5: Touch voltage threshold values for physiological effects

3. Definitions, acronyms, and abbreviations

3.1 Definitions

For the purposes of this document, the following terms and definitions apply. The *IEEE Standards Dictionary Online* should be consulted for terms not defined in this clause.[4]

body voltage: The product of the current through the body and the body impedance.

earth: The conductive mass of the earth, whose electric potential at any point is conventionally taken as equal to zero (also referred to as "remote earth").

earth electrode: A conductor or a group of conductors in intimate contact with, and providing an electrical connection to, earth (also referred to as a "grounding electrode").

NOTE—"Earth" will be used in place of "ground" in this guide to avoid potential confusion with other IEEE definitions of "ground."[5]

negative grounding device (NGD): a device that connects the substation negative bus to the substation grounding grid when the voltage between them exceeds a setpoint. The voltage setpoint can be a voltage magnitude with or without a time delay, or a voltage versus time curve. Also referred to as an automatic grounding switch, floating negative automatic grounding switch, or grounding contactor.

negative return system: the equipment that connects the wheels of electrified rail vehicles to the substation negative bus. This equipment can include running rails (track), impedance bonds, power cables, and filtering reactors. Fourth rail systems use a separate (4th) rail for return current instead of the running rails.

overhead contact line zone: The zone whose limits are in general not exceeded by a broken overhead contact line (OCS).

rail-to-earth resistance: The electrical resistance between the running rails and the earth.

rail potential: The voltage occurring between running rails and earth.

[3]The IEEE standards or products referred to in Clause 2 are trademarks owned by The Institute of Electrical and Electronics Engineers, Incorporated.
[4]*IEEE Standards Dictionary Online* is available at: http://dictionary.ieee.org. An IEEE Account is required for access to the dictionary, and one can be created at no charge on the dictionary sign-in page.
[5]Notes in text, tables, and figures are given for information only and do not contain requirements needed to implement the standard.

(effective) touch voltage: The voltage between conductive parts when touched simultaneously by a person or an animal. The value of the effective touch voltage can be appreciably influenced by the impedance of the person or animal in electric contact with these conductive parts. The conductive path through the body is conventionally from hand to both feet (horizontal distance of 1 m) or from hand to hand.

(prospective) touch voltage: The voltage between simultaneously accessible conductive parts when those conductive parts are not being touched by a person or animal.

voltage limiting device (VLD): A protective device whose function is to prevent the existence of an impermissible high touch voltage. Requirements for voltage limiting devices are specified in EN standards.

3.2 Acronyms and abbreviations

NGD	negative grounding device
VLD	voltage limiting device

4. General

The negative return portion of modern dc light and heavy rail power systems is intentionally isolated from earth under normal operations to the maximum extent practical. The purpose of this electrical isolation is the prevention of stray dc current flow into the earth and nearby infrastructure. The high levels of stray current flow associated with alternate methods of dc traction power system grounding, such as direct grounding and diode grounding, have rendered them essentially obsolete for new system construction Moody [B6].[6]

The steel running rails (tracks), which are the largest component of a negative return system, are typically isolated from the track bed by the use of components such as elastomeric pads and insulated fasteners. The isolation between tracks and ground is not perfect, with typical initial installation resistance-to-ground values of 250 and 500 Ω for 1000 ft of single track being specified for ballasted and direct fixation track, respectively. Although the initial levels of isolation present at system commissioning tend to degrade with time, the resulting isolation of the tracks from earth remains sufficient to permit the buildup of voltage.

For dc traction systems in particular, the lack of an intentional connection between the tracks and earth allows voltage differences to occur along the rails, and between the rails and nearby structures. These voltage differences are caused by the flow of current through the running rails back to the source substations. The voltage difference along the rails is the result of voltage drop across the rail impedance, which is often termed "longitudinal voltage drop." "Rail potential" is the difference in voltage between the tracks and ground at a specific location. "Earth" or "ground" in this instance means "remote earth" and "earth" in the terminologies of American (IEEE) and European (IEC, EN) standards and codes, respectively (a zero-potential reference).

Rail potential at any location along the tracks varies significantly due to the passage of trains, with the higher values typically corresponding to periods of peak train acceleration and therefore lasting on the order of seconds. The resulting peak rail potentials may or may not be significant, being dependent on the magnitude of the train load or braking currents, the resistance of the rail return circuit, and the degree of electrical isolation of the tracks from earth. The distance between substations and the outage of substation rectification equipment also affect rail potentials since these impact the resistance of the rail return circuit.

Rail potentials resulting from short circuits between the positive dc supply network (contact system or cables) and the tracks can be significant, depending on the location of the fault. These low-resistance, higher-magnitude faults are typically cleared rapidly since they are easily detected by substation protective devices. Short circuits from the positive dc supply network to poorly conducting surfaces (high resistance ground

[6]The numbers in brackets correspond to those of the bibliography in Annex C.

faults) can cause the voltage in the fault vicinity to rise well above that of the rails. This can result in a rail potential, but with a polarity opposite to that of the rail potentials described above. Without a low-resistance pathway back to the substation negative dc bus, a high resistance ground fault could persist for a significant length of time. Causes of high resistance ground faults include non-shielded positive cable insulation failures, contact rail and OCS insulator failures, partially-failed surge arresters, and debris touching the contact rail, including accumulated snow that has been treated with snow melting salts.

5. Review of Applicable Codes and Standards for Rail Potential

5.1 General

Rail potential can cause voltages to occur on metallic railway infrastructure that may be accessible to railway workers and the public. For example, since the metallic shells of rail vehicles are typically at the same voltage as the wheels and rails, a voltage difference could be impressed on a passenger entering or exiting a train from a grounded platform. Alternatively, persons may contact metallic infrastructure near the tracks that has elevated voltages due to rail potential, or they may directly contact the tracks or metallic equipment connected to the tracks. If the contact does not create a difference in voltage across the body (hand-to-hand, hand-to-feet, foot-to-foot), then the voltage does not present a hazard. However, if a significant voltage difference is impressed across the body, potentially dangerous electric currents could flow through the heart as a result.

The effects of an electric current that passes through the vital parts of the human body depend on the duration, magnitude, and frequency of the current. The most dangerous result of an exposure to this current is a heart condition known as ventricular fibrillation. Ventricular fibrillation results in an immediate arrest of blood circulation. Although it is a current flow that causes this condition, the current flow through a person's body is a response to a voltage difference between two locations on the person's body. The resulting current flow is proportional to the equivalent resistance of the human body and the magnitude of the voltage difference across the body, or "body voltage", in accordance with Ohm's Law (body current = voltage difference/body resistance). For this reason, codes, and standards for the design of electrical facilities specify maximum permissible voltages, usually referred to as "touch" or "step" voltages.

5.2 Review of National Codes and Standards

IEEE Std 80[7], IEEE Guide for Safety in AC Substation Grounding, is the standard commonly referenced in the USA for the design of electrical facility grounding. Although other US standards and codes such as the National Electrical Code, the National Electrical Safety Code, and IEEE Std 142, IEEE Recommended Practice for Grounding of Industrial and Commercial Power Systems, address grounding methods and requirements, only IEEE Std 80 establishes safe limits for potential differences (tolerable voltages) between points that can be contacted by the human body. Since no other National standards or codes establish safe voltage limits at the present time, only IEEE Std 80 is addressed in this guide.

5.3 IEEE Std 80

IEEE Std 80 was developed as a guide for ac substation design and does not address dc. One of the purposes of this standard, as described in 1.2 (Purpose) in IEEE Std 80-2013, is to stablish, as a basis for design, safety limits of potential differences that can exist in a substation under fault conditions between points that can be contacted by the human body. The safe limits of potential differences are termed "tolerable voltages", which are expressed in terms of touch voltage and step voltage. Touch voltage in IEEE Std 80 is the voltage between one hand and both feet, including the effects of the resistance between the feet and remote earth (refer to Annex A for the equivalent circuit). Touch voltage as defined in IEEE Std 80 is therefore not the same as "body voltage", which is the voltage across the body alone. Touch voltage as defined by IEEE Std 80 is always higher than the body voltage for hand-to-feet contact scenarios. The potentially hazardous current flow through the

[7]Information on references can be found in Clause 2.

body is determined by the body voltage rather than the touch voltage as defined in IEEE Std 80. Touch voltage as defined by IEEE Std 80 is often referred to as "prospective touch voltage".

Since rail potential is the voltage between the running rails and remote earth, touch voltage as defined by IEE Std 80 is the same as rail potential under certain circumstances, such as hand contact with rail vehicle shells. In Figure A.1 in Annex A, rail potential due to hand contact is the voltage between the "hand" terminal and remote earth.

The tolerable voltage equations provided in IEEE Std 80 are derived from the research work of C. F. Dalziel, although the work of other authors is also discussed in IEEE Std 80-2013 Clause 6.3, including a comparison with the more recent tolerable body current curve of Biegelmeier and Lee. IEEE Std 80 provides simplified formulas for calculating the 50 Hz and 60 Hz ac voltages that can be tolerated by 99.5% of the population (dc voltages are not addressed). IEEE Std 80 provides these formulas for two body weights, 110 lb (50 kg) and 155 lb (70 kg), and for touch contact (hand-to-hand or hand-to-feet) and step contact (foot-to-foot). According to IEEE Std 80, persons weighing 155 lb can tolerate approximately 35% higher ac voltage than persons weighing 110 lb, and tolerable step voltages are generally much higher than touch voltages for similar conditions. For these reasons the more conservative case of touch voltages for persons weighing 110 lb are addressed below.

A simplified formula for tolerable rms ac touch voltage is provided in Equation (17) of IEEE Std 80 and shown below. This formula is based on an equivalent human body resistance from hand-to-feet and hand-to-hand of 1000 Ω. The resistance to remote earth R_f of the human foot is conservatively represented as an equivalent conducting metallic disc. For touch voltages, one (bare) hand is assumed to be in contact with a grounded structure, which is typical for a substation environment. Refer to Figure A.1 in Annex A for an equivalent touch voltage circuit.

$$E_{touch} = I_B(R_B + 1.5\rho) \tag{1}$$

where:

R_B is 1000 Ω (equivalent resistance of the human body, assumed to be constant)
ρ is the electrical resistivity in Ω-m of the material on which the person is standing (assumed to be uniform, homogeneous material)
I_B is tolerable body current in amperes (a function of parameters including exposure time and body weight)

The 1.5 factor, in units of m^{-1}, represents the ground resistance of one foot as represented by a metallic disc 0.0833 m in diameter

It is important to note that the tolerable current in Equation (1) above is based on tests limited to the time range t = 0.03 to 3.0 s. The results for touch voltage are therefore only valid for this time range; IEEE Std 80 does not provide tolerable voltages for continuous exposure or for the long-term durations typical of rail potential caused by rail vehicles.

Values of touch voltage from Equation (1) for some representative low values of material resistivity ρ taken from Table 7 and Table 8 of IEEE Std 80-2013 are provided in Table 1 below for several arbitrary exposure durations. The touch voltages in the "metal-to-metal contact" column are highly conservative, intended for application to hand-to-hand shock situations only. In order for the metal-to-metal contact values to apply to a hand-to-foot shock situation, the person's bare feet would need to be in direct contact with remote earth, which may not be physically possible in dc transit system substation, passenger station, or transit system right-of-way environments. A metal-to-metal contact situation is possible with grounded metallic platform-edge doors, or with other grounded metallic station platform infrastructure that is within reach of a vehicle shell.

Table 1—Tolerable ac touch voltages without surface layer

Time (sec.)	Tolerable ac touch voltages in Volts (rms) per Equation (1) without additional high resistivity surface layer				
	Metal-to-metal contact ρ = 0	Wet organic soil ρ = 10	Wet concrete (low range) ρ = 21	Wet concrete (high range) ρ = 100	Dry soil ρ = 1000
0.03	670	680	691	770	1674
0.05	519	527	535	597	1297
0.10	367	372	378	422	917
0.50	164	167	169	189	410
1.00	116	118	120	133	290
3.00	67	68	69	77	167

The ac touch voltages in Table 1 above assume that hand and foot contact resistances are equal to zero, and that glove and shoe resistances are also equal to zero (i.e., bare hands and bare feet). These are very conservative assumptions for a railway environment. They also do not include the beneficial effects of a layer of high resistivity material under the feet of persons to increase their resistance to remote earth such as track ballast, asphalt, or platform insulating materials. The inclusion of a surface layer of high resistivity material significantly increases the tolerable touch voltage.

Clause 7.4 of IEEE Std 80 provides formulas that can be used to calculate the effects of a thin layer of high resistivity surface material on touch voltage. Inserting Equation 19 from IEEE Std 80-2013 into Equation (1) above results in the following equation:

$$E_{touch} = I_B(R_B + 1.5\rho_S C_S) \tag{2}$$

where:

ρ_S is the surface layer material resistivity in Ω-m
C_S is the surface layer derating factor

The tables below provide the touch voltage calculation results from Table 1 adjusted for the presence of thin surface layers of wet asphalt, wet #57 (3/4 in.) granite stone, and wet pea gravel. The resistivity values for these surface layer materials have been taken from Table 7 of IEEE Std 80. It should be noted that the permissible touch voltages resulting from the same materials in their dry state are significantly higher than the values shown in Table 2 through Table 4.

Table 2—- Tolerable ac touch voltages with asphalt surface layer

Time (sec.)	Tolerable ac touch voltages in Volts (rms) per Equation (2) with 2 in surface layer of wet asphalt above the material indicated below			
	Wet organic soil ρ = 10	Wet concrete (low range) ρ = 21	Wet concrete (high range) ρ = 100	Dry soil ρ = 1000
0.03	6001	6007	6044	6469
0.05	4649	4653	4682	5011
0.10	3287	3290	3310	3543
0.50	1470	1471	1480	1584
1.00	1039	1040	1047	1120
3.00	600	601	604	647

Table 3—- Tolerable ac touch voltages with #57 stone surface layer

Time (sec.)	Tolerable ac touch voltages in Volts (rms) per Equation (2) with 4 in surface layer of wet #57 stone above the material indicated below			
	Wet organic soil ρ = 10	Wet concrete (low range) ρ = 21	Wet concrete (high range) ρ = 100	Dry soil ρ = 1000
0.03	6243	6246	6270	6548
0.05	4835	4838	4857	5072
0.10	3419	3421	3434	3586
0.50	1529	1530	1536	1604
1.00	1081	1082	1086	1134
3.00	624	625	627	655

Table 4—- Tolerable ac touch voltages with pea gravel surface layer

Time (sec.)	Tolerable ac touch voltages in Volts (rms) per Equation (2) with 4 in surface layer of wet pea gravel above the material indicated below			
	Wet organic soil ρ = 10	Wet concrete (low range) ρ = 21	Wet concrete (high range) ρ = 100	Dry soil ρ = 1000
0.03	4154	4157	4182	4459
0.05	3218	3220	3239	3454
0.10	2275	2277	2290	2442
0.50	1017	1018	1024	1092
1.00	719	720	724	772
3.00	415	416	418	446

IEEE Std 80 includes some qualifying statements that are important for those who are involved with the management of dc traction power system rail potential to be aware of. Two of these statements are noted below.

a) No attempt is made to cover the grounding problems peculiar to dc substations. (Scope, page 1).

b) The guide is primarily concerned with safe grounding practices for power frequencies in the range of 50 Hz to 60 Hz. The problems peculiar to dc substations are beyond the scope of the guide. (Purpose, p. 2).

The tolerable voltages that can be derived from IEEE Std 80 are therefore applicable for 50 Hz to 60 Hz only, and within a 0.3 to 3.0 s time interval. The only substantial reference to application at other frequencies can be found in IEEE Std 80-2013 Clause 5.1, which notes that research indicates that the human body can tolerate a slightly higher 25 Hz current and approximately five times higher dc.

Although the analytical methods and data contained in IEEE Std 80 are very helpful for the study of rail potential management, the touch and step voltages resulting from them are not applicable to dc traction power systems.

5.4 Review of other codes and standards for rail potential

There are two foreign standards available in the English language that deal directly with rail potential safety for both ac and dc traction power systems. These are the standards that are referenced in Europe for the design of electrified railway facility grounding.

a) European Standard BS EN 50122-1, Railway applications—Fixed installations—Electrical safety, earthing and the return circuit, Part 1: Protective provisions against electric shock; and

b) International Standard IEC 62128-1, Railway applications—Fixed installations—Part 1: Protective provisions relating to electrical safety and earthing

EN 501221-1 is a European Standard that has been prepared by the European Committee for Electrotechnical Standardization (CENELEC). The current version of EN 501221-1 is 2011, and it includes corrigenda and addenda through 2017.

IEC 62128-1 is published by the International Electrotechnical Commission (IEC), which is a worldwide standardization organization that is affiliated with the International Organization for Standardization (ISO). In the foreword to the current 2013 version of IEC 62128, it is noted that IEC 62128-1 is based on BS EN 50122-1. BS EN 50122-1 and IEC 62128-1 are therefore equivalent documents, although there are some terminology differences between them that reflect the more recent revisions of BS EN 50122-1.

Since the current version of BS EN 50122-1 is typically more recent than the current version of IEC 62128-1, BS EN-50122-1 has been referenced in this report (BS EN 50122-1:2011+A1:2011, specifically).

5.5 European Standard BS EN 50122-1

The scope section of this standard begins with the following statement: "This European Standard specifies requirements for the protective provisions relating to electrical safety in fixed installations associated with ac and/or dc traction systems and to any installations that can be endangered by the traction power supply system. It also applies to all aspects of fixed installations that are necessary to ensure electrical safety during maintenance work within electric traction systems." In other words, it was developed specifically to address electrical safety in ac and dc traction power systems.

BS EN 501221-1 provides tables of maximum permissible ac and dc touch voltages versus exposure duration, instead of formulas. The substantial technical basis for these tables is contained in IEC 60479-1, which also contains information about body impedance and body current thresholds for various physiological effects that is based on extensive testing. This technical basis is further augmented by IEC Technical Report TR 60479-5, *Touch voltage threshold values for physiological effects*. TR 60479-5 derives touch voltage threshold values for the four zones of physiological effects that are presented in IEC 60479-1, as follows:

a) Slight pricking sensation;

b) Involuntary muscular contractions;

c) Strong involuntary muscular contractions; and

d) Patho-physiological effects (ventricular fibrillation, cardiac arrest, burns, etc.).

IEC 60479-1 contains information about body impedance and body current thresholds for various physiological effects. This information is combined to derive estimates of ac and dc touch voltage thresholds for certain body current pathways, contact moisture conditions, and skin contact areas. The extensive research on which IEC 60479-1 is based concludes that the impedance of the human body varies with current pathway, contact area, touch voltage magnitude, as well as with current frequency and duration. For dc current, the fibrillation threshold is also significantly higher for currents flowing downward through the body than for currents flowing upward. These findings result in a significantly more complex electrical model of the human body than the model that is used in IEEE Std 80. In addition, there are a number of important findings specific to dc exposure that are not widely reported in the USA, and for this reason are quoted directly below.

— As regards to the influence of frequency, considering the frequency dependence of the skin impedance, the total impedance of the human body is higher for dc and decreases when the frequency increases (4.4 from IEC 60479-1:2018).

— The total body resistance R_T for dc is higher than the total body impedance Z_T for ac for touch voltages up to approximately 200 V due to the blocking effect of the capacitances of the human skin (4.6.5 from IEC 60479-1:2018).

— Accidents with dc are much less frequent than would be expected from the number of dc applications, and fatal electrical accidents occur only under very unfavorable conditions, for example, in mines. This is partly due to the fact that with dc, the let-go of parts gripped is less difficult and that for shock durations longer than the period of the cardiac cycle, the threshold of ventricular fibrillation is considerably higher than for ac (Scope from IEC 60479-1:2018).

— On the evidence available, mostly from animal research, the values are so conservative that this document applies to persons of normal physiological conditions including children, irrespective of age and weight (Introduction from IEC 60479-1:2018).

IEC 60479-1 defines a dc/ac equivalence factor of 3.75, which is the ratio of dc to its equivalent rms value of ac that has the same probability of inducing ventricular fibrillation; this factor applies for exposure durations that are less than one cardiac cycle (approximately 500 and 800 msec for heart rates of 120 and 75 and beats per minute, respectively). This finding is in general agreement with IEEE Std 80-2013 Clause 5.1 which notes that the human body can tolerate a slightly higher 25 Hz current and approximately five times higher dc.

The threshold of reaction for dc is 2 mA, whereas the threshold of reaction for ac (15 to 100 Hz) is 0.5 mA, a factor of four difference. The threshold of reaction is defined as the minimum value of touch current that causes involuntary muscular contraction. The threshold of let-go for ac current is 10 mA for adult males, whereas there is no definable threshold of immobilization or let-go current for dc The threshold of let-go is defined as the maximum value of touch current at which a person holding electrodes can let go of the electrodes.

The tables of permissible voltages in BS EN-50122-1 refer to several key technical terms that reflect the dynamic nature of an electrified railway environment with respect to rail potential. An understanding of these terms is necessary for the correct understanding of this standard, and explanations of these terms are provided below for reference with this in mind.

Rail potential: Voltage occurring between running rails and earth.

(Effective) touch voltage (U_{te}): voltage between conductive parts when touched simultaneously by a person or an animal. Refer to Figure D.1 on page 71 of BS EN 50122-1:2011 and to Figure A.2 in Annex A for equivalent touch voltage circuits. Effective touch voltage as defined in BS EN 50122-1 does not include the resistance to remote earth of the standing surface, so it is not equivalent to touch voltage as defined in IEEE Std 80.

Prospective touch voltage (U_{tp}): voltage between simultaneously accessible conductive parts when those conductive parts are not being touched by a person or an animal. This is similar to the IEEE Std 80 definition of touch voltage since it includes the resistance between the standing surface and remote earth in the equivalent circuit ($R_f/2$ in IEEE Std 80).

Body voltage: The product of the current through the body and the body impedance.

Short-term conditions: < 0.7 s (typical of short-circuit conditions)

Long-term conditions: ≥ 0.7 s (longer than a typical cardiac cycle)

Voltage limiting device (VLD): Protective device whose function is to prevent existence of an impermissible high touch voltage.

Values of maximum permissible effective ac and dc touch voltages from Table 4 and Table 6 in BS EN 50122-1 are provided in Table 5 below, side-by-side for comparison. According to BS EN 50122-1, the values provided are the maximum acceptable values. The corresponding body voltages are provided in BS EN 50122-1:2011/A1:2011 Table 3 and Table 5, respectively. The body current path used for these tables is from one hand to both feet, which is the worst case. The relative probability of ventricular fibrillation for alternate current paths is provided in Table 12 of EN 60479-1 in the form of heart-current factors. From this table, a body current flowing from foot-to-foot would have to be approximately 25 times that of the same fibrillating current flowing from hand-to-feet. This is why maximum tolerable step voltages are not provided in the BS EN 50122-1 tables. Similarly, a body current flowing from left hand to right hand would have to be approximately 2.5 times that of the same fibrillating current flowing from hand-to-feet.

These voltages are based on the following additional criteria contained in IEC 60479-1:

— Total body impedance: 50% of the population (50th percentile rank);

— Probability of ventricular fibrillation: zero percent (curve c1 on Figure 22 of IEC 60479-1);

— Direction of current flow: upward (feet positive to hand negative);

— Hand and foot contact resistance: zero for long-term conditions; and

— Foot contact resistance R_{a1} for short-term conditions (< 0.7 s.): includes an additional 1000 Ω (the equivalent resistance of old wet shoes). This permits the touch voltages for short-term conditions to be higher than the corresponding body voltages. This resistance is not the same as the standing surface resistivity ρ or the thin layer of high resistivity material ρ_s described in Clause 5.3; these would be additional resistances.

Table 5—- Maximum permissible effective touch voltages

Maximum permissible effective touch voltages From BS EN-50122-1*		
Time (sec.)	**Volts rms ac**	**Volts rms dc**
> 300*	60	120
300	65	150
1.00	75	160
0.90	80	165
0.80	85	170
0.70	90	175
0.60	180	360
0.50	220	385
0.40	295	420
0.30	480	460
0.20	645	520
0.10	785	625
0.05	835	735
0.02	865	870

*BS EN 50122-1 notes that accessible voltages in workshops shall not exceed 25 Vac or 60 Vdc. These lower values are intended to lessen the chance that a non-lethal shock to a worker using shop equipment could result in the worker being injured by the equipment, not by the shock itself.

It is important to note that the ac and dc maximum permissible effective touch voltages in Table 5 do not include the resistance to remote earth R_{a2} of the standing surface (Refer to the equivalent circuit Figure A.2 in

Annex A). If this standing surface resistance R_{a2} were to be included, the prospective touch voltages would be higher than the effective touch voltages, as illustrated in Table 1. Since prospective touch voltage is the same as rail potential, this would permit a higher rail potential to occur for a particular effective touch voltage. In simpler terms, this means that the permissible touch voltages in Table 5 are not normally the same as the rail potential (they are typically lower). The method for including the R_{a2} standing surface resistance in (prospective) touch voltage calculations is provided in BS EN 50122-1:2011/A1:2011 Annex D. The standing surface resistance is the resistance between the person's feet and remote earth, calculated in agreement with IEEE Std 80; it is assumed to be homogeneous.

The BS EN 50122-1 touch voltages in Table 5 also do not include the beneficial effects of a layer of high resistivity material under the feet of persons intended to increase their resistance to remote earth; this is in addition to the homogeneous standing surface resistance. The inclusion of a surface layer of high resistivity material can significantly increase prospective touch voltages, as was demonstrated in Clause 5.3. No method is provided in BS EN 50122-1 for the inclusion of this additional high resistance layer between the person's feet and the standing surface resistance R_{a2}. It appears that the same method employed in IEEE Std 80 to adjust the standing surface resistance R_f for a layer of high resistivity material can be used to adjust the BS EN 50122-1 standing surface resistance R_{a2}. This adjustment would significantly increase prospective touch voltages, as illustrated by Table 2 through Table 4. With this in mind, it appears that the BS EN 50122-1 maximum permissible effective touch voltages in Table 5 are conservative for hand-to-feet contact situations, even though they may appear high when compared with traditional North American grounding practice. In other words, rail potentials for exposure durations greater than 0.7 s can be higher than the Table 5 maximum touch voltages for hand-to-feet contact situations, since the BS EN 50122-1:2011/A1:2011 Table 5 values assume the person is standing barefoot on a metallic plate that is perfectly connected to remote earth (body voltage is assumed to be equal to touch voltage). This is clearly a very conservative assumption since simulated rail potentials are normally calculated between the running rails (vehicle shell) and remote earth. For hand-to-hand contact situations, however, this does not apply since the touch voltage will be the same as the body voltage for the hand-to-hand contact situation.

6. Survey of rail potential policies and criteria for North American metro rail systems

Table 6 below provides a summary of known rail potential management practices for North American metro/heavy rail systems with respect to voltage limits and control methods.

Table 6—- Metro system rail potential practice survey

Survey of current North American metro rail system rail potential practice			
Transit system	**System type**	**Rail potential criteria**	**Rail potential control methods**
Baltimore Metro	600 Vdc heavy rail	None at this time	None
BART	1000 Vdc heavy rail	80 V for platforms and tail track areas	NGD set at 80 V
CTA	600 Vdc heavy rail	50 V: normal operation 70 V: contingency op.	Parallel negative return conductors, partially diode-grounded neg. buses (Note 1)
Los Angeles Metro	750 Vdc heavy rail	50 V: normal operation 70 V: contingency op.	NGD (75–135 V)
LIRR	625 Vdc heavy rail	75 V: normal operation	None
MARTA	750 Vdc heavy rail	Not known	Not known
MBTA	600 Vdc heavy rail	None at this time	Parallel negative return cables
Metro-North Railroad	700 Vdc heavy rail	None at this time	None
Miami Dade Metrorail	750 Vdc heavy rail	None at this time	NGD set at 80 V
NYCT	625 Vdc heavy rail	50 V: normal operation 70 V: contingency op.	Parallel negative return cables

Table continues

Table 6—- Metro system rail potential practice survey *(continued)*

Survey of current North American metro rail system rail potential practice			
Transit system	**System type**	**Rail potential criteria**	**Rail potential control methods**
PATH	600 Vdc heavy rail	None at this time	None
SEPTA	600 Vdc heavy rail	None at this time	Parallel negative return cables
Toronto Transit (TTC)	600 Vdc heavy rail	70 V: normal operation	NGD set at 70 V
WMATA	700 Vdc heavy rail	50 V: normal operation	None
NOTE—CTA substation dc negative buses are not intentionally grounded. Many of them have stray current drainage connections to utilities that use diodes or voltage-sensing contactors. When the voltage of the "protected" infrastructure becomes sufficiently positive with respect to the substation negative bus, the diodes and contactors conduct current. This connection establishes a partial and temporary ground reference for the negative bus. The use of stray current drainage diodes and contactors connected to the substation dc negative bus is a typical practice for many of the original metro systems in the USA.			

As illustrated in Table 6, not all metro rail operators have programs in place to mitigate rail potential. BART, Los Angeles Metro, Miami Dade and TTC employ negative grounding devices in substations. CTA, NYCT and SEPTA have been using supplemental negative return conductors for many years to reduce rail potential (Refer to Clause 9.4 for additional information). The traction power substations for new light and heavy rail systems are frequently equipped with negative grounding devices with the intent of providing better detection of contact system ground faults as well as rail potential mitigation in the vicinity of substations.

7. Rail potential calculations

7.1 General

Rail potential is typically calculated by one of two methods. The method that is most analytically exact involves the application of Maxwell's equations (transmission line theory), treating the running rails as long, "leaky" transmission lines with distributed parameters (continuously distributed resistance R and conductance G). This method becomes highly complicated for ac electrification systems in particular due to the interactions between circuit elements (mutual coupling). Even for dc systems, it requires the use of simplifying assumptions that make it difficult to apply to rail systems with multiple substations and multiple trains in simultaneous operation on multiple tracks. In addition, it is not adaptable to the matrix-oriented electrical network solution methods that are used in modern load flow simulation programs. For these reasons this method is typically used for theoretical purposes only such as for the illustration of rail potential concepts, and for validating the methods of load flow simulation programs for simple system configurations.

The second method, network solution, divides the running rails between substations into smaller segments, each with an equivalent resistance to remote earth. This simplification enables the calculation of rail potentials resulting from typical traction power system operating conditions using load flow simulation programs that model the negative return electrical network and the associated connections to earth. Both methods are discussed below.

7.2 Distributed parameter (transmission line) equations

The application of this method to the calculation of rail potential in dc systems is described in section 6.4 of Kiessling [B3]. A more thorough treatment of this method is provided in Riordan [B8] and Yu and Goodman [B17]. This approach models just the running rails in a section of track that is isolated at both ends and not intentionally grounded (floating). A current source that represents a single train injects current into the distributed track model at a specific location, and the resulting rail-to-earth voltages are calculated at regular intervals along the track.

The results of calculations using this method are provided in this section for illustrative purposes only. The calculations use a simplified representation of a typical heavy rail metro system. The characteristics of the simplified running rail circuit are summarized below.

a) Two-track area between the bumping post at milepost −0.423 and the last traction power substation which is located at milepost 1.000.

b) Single 8-car train starting at milepost 0.00.

c) Train at maximum power (1620 A/car x 8 cars, or 12 960 A).

d) Running rail characteristics: 115 lb RE rails, 60 °C operating temperature, 5% worn.

e) Four running rails modeled in parallel as one equivalent conductor.

f) For comparative purposes, rail-to-earth resistance levels of 500, 50, 5 and 0.5 Ω for each thousand feet of single track, corresponding to conductance values of 0.0066, 0.13, 1.31, and 13.1 Siemens-km for both tracks. The rail-to-earth resistance range from 50 to 5 Ω for each thousand feet of track can be considered the most representative for rail operation during ambient temperature worst case (summer) simulation conditions.

The results of the calculations are summarized on Figure 1. This plot shows the rail-to-remote-earth voltages that occur along the right-of-way with a train drawing maximum power at milepost 0, and a substation at milepost 1. This is a representation of this one moment in time.

From this figure, it can be seen that, for an ungrounded system, the locations of highest rail potential occur at the train (positive polarity) and at the substation (negative polarity) when the train is motoring, that is, injecting current into the track. If the train is injecting current into the contact system due to regenerative braking, the polarities would reverse. The maximum polarity locations agree with similar diagrams provided in section 6.4 of Kiessling [B3] and in Yu [B18], although the voltage characteristic can have a more exponential shape depending on circuit parameters. For the typical operating range of railway system rail-to-earth resistivity, the results of dc rail potential calculations are moderately dependent on the level of rail-to-earth resistance or conductance. It should be noted that the location of the point where the rail potential changes polarity will shift depending on the length of track modeled, the location of substations, and operation of negative grounding devices, if present. For systems with diode-grounded or directly grounded substations, the voltage at the substation end will be near zero and the voltage at the train will be twice that shown in Figure 1 (Yu [B18]).

7.3 Network solutions

A network solution using the traditional "nodal formulation" requires that a traction power system be represented as an electrical network composed of "nodes" and "branches". The branches represent electrical equipment and conductors such as rectifiers, bus bars, contact systems, running rails, cables, and ground connections. The nodes represent the connection points between these circuit elements. Obtaining a mathematical solution to this network involves the conversion of the branch impedances into an admittance (Y) matrix. This procedure establishes a system of equations that must be solved simultaneously using numerical methods to obtain the voltage at each node. Once the node voltages have been determined, the current flows through each branch can be calculated.

Using the network solution method to calculate dc rail potential requires that the running rails between substations be represented as discrete resistors. The distributed resistance between the running rails (track) and remote earth, which is typically modeled as "conductance" (G), is likewise represented by multiple discrete resistors connected between the rails and the circuit ground plane; this method is illustrated in the partial track model shown in Figure 2. This approach enables the voltage between the running rails and remote earth (rail potential) to be calculated at the locations of the resistor "nodes" when the electrical network is solved.

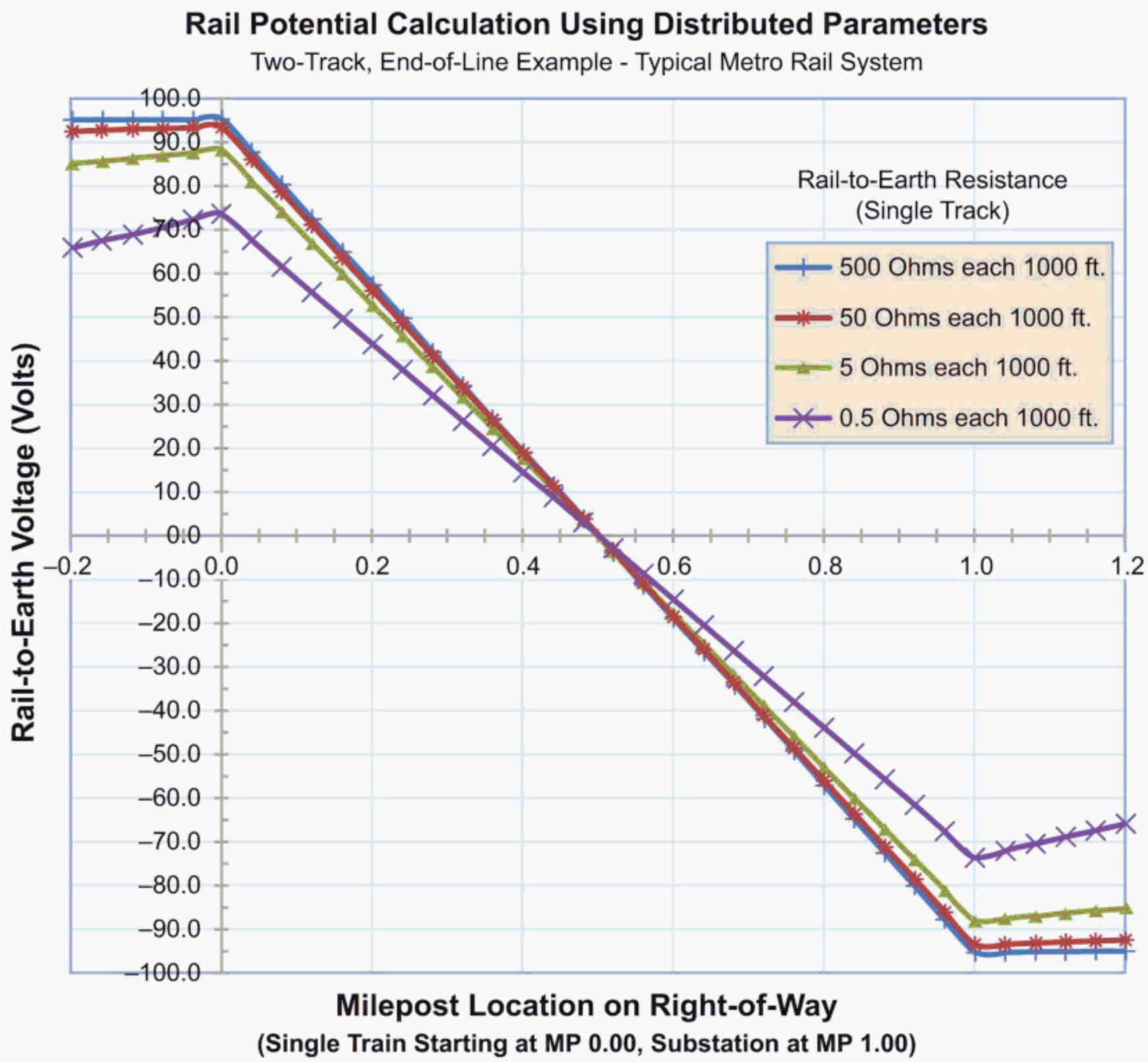

Figure 1—Rail potential example calculation

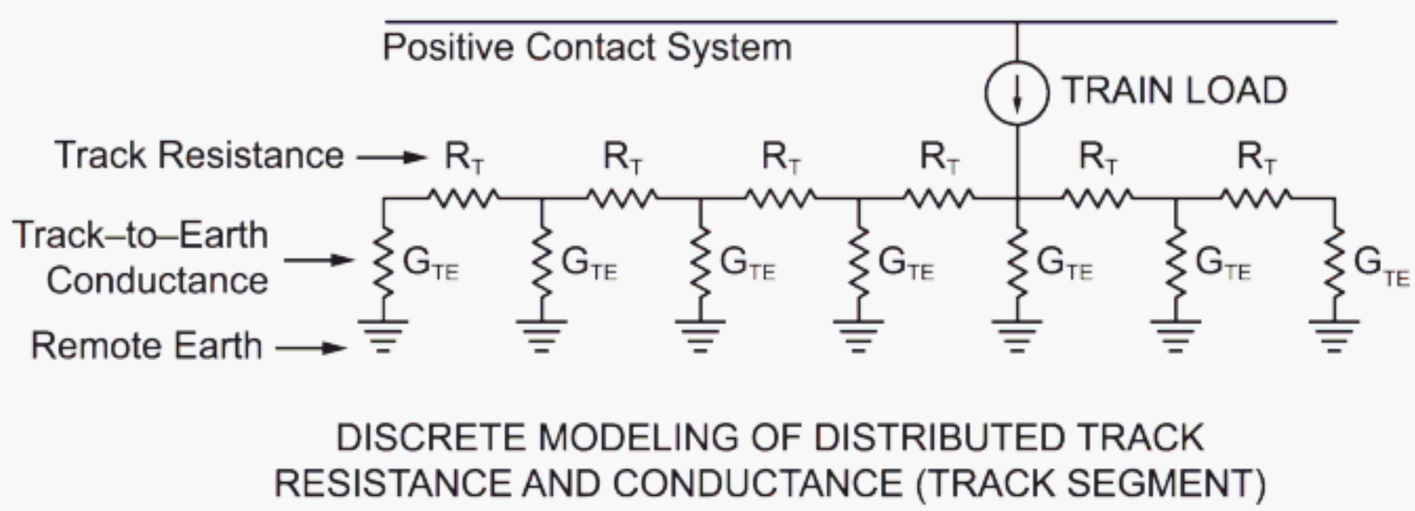

Figure 2—Discrete track modeling example

Information on the electrical resistance of typical North American light and heavy rail system running rail sections is provided in Annex B.

8. Touch voltage calculations

8.1 General

The definition of touch voltage as used in this clause is taken from the BS EN 50122-1 definition for prospective touch voltage. This is equivalent to the IEEE Std 80 definition of touch voltage if the BS EN 50122-1 additional resistance for the standing surface is included. Since prospective touch voltage calculations include resistances external to the body in the equivalent circuit, prospective touch voltage is not normally the same as "body voltage" ("body voltage" being the voltage across the body impedance alone). For the worst-case touch voltage scenario of left hand to both feet described in BS EN 50122-1, body voltage will always be less than prospective touch voltage, and therefore less than the rail potential that is responsible for the touch voltage. Refer to the touch voltage circuits from IEEE Std 80 and BS EN 50122-1 in Appendix A for additional information.

8.2 Calculation

The analytical methods required to calculate touch voltages in electrified rail systems are extremely complex (Sunde 1936 [B12], Sunde 1949 [B13]). This is due to the difficulties inherent in the modeling of electric fields and current flows in the earth and infrastructure, which requires application of electromagnetic field theory. For ac systems, there is the additional complication of mutual coupling between conductive materials. Exact solutions for these calculations require specialized software and expertise. Simplifications and guidelines are typically employed instead.

Annex C of BS EN 50122-1, "Guiding Values for Rail Potential Gradient," provides Figure C.1 that can be used to estimate the extent to which the voltage gradient created by rail potential decreases with distance from the running rails. This figure is an example of a double-track system with soil resistivities between 40 and 200 Ωm. The figure shows that the voltage with respect to remote earth one meter away from the outer running rail is approximately 70% of the peak rail potential, 50% at 2 m, and 20% at 10 m. This figure was developed for ac traction systems. However, according to chapter 6.4.4 of Kiessling [B3], it is reasonably valid for dc traction systems, although the gradient is steeper for dc systems due to their intentional electrical isolation of the tracks from earth. This means that prospective touch voltage decreases more quickly with distance from the energized element (railcar body, metallic infrastructure, etc.) than indicated in Figure C.1.

8.3 Voltage exposure scenarios

It is useful to review the range of situations (scenarios) in which persons could be exposed to touch or step voltages resulting from rail potential to evaluate whether impermissible voltages could be present. As noted previously, maximum rail potential occurs in the vicinity of accelerating trains, and to a lesser extent near the substations supplying power to these trains. As noted in Kiessling [B3] chapter 6.4.4.3, peak rail potential for a double-track line typically occurs in the vicinity of trains that are accelerating away from each other on adjacent tracks.

Rail maintenance shops are not considered in this review. Shop tracks are normally grounded to the shop building grounding system to prevent the development of significant rail potential and electrically insulated from the yard and main line.

8.4 Person-to-railcar at station platform

The metallic shell of a railcar is normally at the same voltage as the running rails under the car. When a person contacts the car shell and the platform simultaneously, they will either be exposed to a touch voltage between hand and feet, or a step voltage between two feet. Animals contacting the car shell exterior would be exposed to a touch potential involving four feet, or a touch potential when entering or leaving a vehicle. Since the railcar being contacted will not be in motion, the rail potential at this location will not normally be

at a maximum value. A train entering or leaving the station on an adjacent track could cause a significant rail potential on the stationary train car shell particularly if a track cross-bond is located nearby, but it would not be a peak value for that location.

For the touch voltage scenario, if the station platform near the tracks is covered with an insulating material, the rail potential will divide across a person's (or animal's) body impedance and the resistance between their feet and remote earth. This will result in the voltage across their body being less than the rail potential. The only possibility of a person experiencing full rail potential across their body in this scenario would be if they were simultaneously in contact with grounded conductive infrastructure on the platform within reach of the train. This would be a hand-to-hand type contact, which is less severe than a hand-to-foot contact by a factor of approximately 2.5, according to BS EN 50122-1 (IEC 60479-1). Modern passenger station design for dc transit systems should not permit the installation of directly grounded conductive infrastructure within reach of trains.

For the step voltage scenario when entering a railcar, the rail potential will divide across the person's lower body impedance and the resistance between one foot and remote earth. This will result in a body voltage less than the rail potential for persons. In addition, the research on which BS EN 50122-1 is based indicates that the risks of step voltage exposure are significantly less than for touch voltage exposure, to the extent that maximum permissible step voltages are not even provided in BS EN 50122-1.

8.5 Person-to-railcar at station platform with platform edge doors/screens

Station platform edge doors and screens are used in many automatic people mover (APM) systems in North America and are commonly used in metro systems in Europe and Asia as an aid to passenger flow management, ventilation management and platform safety. The platform edge doors are aligned with the railcar doors so as to direct passengers into/out of the railcars after the cars have stopped at the station. It is quite possible to simultaneously contact the platform edge doors and the railcar shell doors with both hands. Since the railcar shell is at running rail potential, a hand-to-hand touch potential scenario is possible, depending on the design of the platform edge door system. Ideally the platform edge door system would be non-metallic to preclude potentially hazardous touch potentials, but this may not be practical. If the door system is metallic, then other electrical isolation options must be considered. Directly bonding them to the station platform grounding system would create a potential hazard by exposing passengers to rail potential across their hands. Temporarily or permanently bonding them to the running rails could create stray current corrosion problems and interfere with the train signal systems unless carefully engineered. However, this latter solution was used on the platform edge screens for the London Elizabeth Line project (Birbeck, et al., [B1]), where the platform edge structure was bonded to the nearby track running rails and isolated from the station platform ("station earth"). The same approach was used on the Singapore Mass Rapid Transit (MRT) system (Sim, et al., [B9]); in addition, a high-resistivity isolation membrane was installed under the platform to achieve the necessary electrical isolation. It should be noted that platform edge doors are motor-operated, requiring the operating motor power wiring and grounding to be adequately isolated from accessible surfaces.

8.6 Person-to-railcar on right-of-way

This scenario is similar to the person-to-railcar at station platform scenario described above, except that simultaneous contact with a railcar and additional grounded infrastructure is possible (hand-to-hand type contact). Along the right-of-way and in storage yards, the additional infrastructure could include steel bridge supports, metallic signal masts and signal bridges, and metallic fencing. However, as noted above, the railcar being contacted would be stationary, requiring the rail potential to be developed from another source such as a train operating nearby.

"Rescue trains" are sometimes used to retrieve passengers from disabled trains. To avoid a possible person-to-railcar hand-to-hand touch voltage scenario during the transfer of passengers, the rescue and disabled trains are electrically bonded together with cables prior to the passenger transfer. As an alternative, the rescue and

disabled trains are staggered sufficiently to preclude their simultaneous contact; contact rails, if present, are de-energized prior to passenger transfer.

8.7 Person-to-track

A person touching a running rail with one or both hands is exposed to full rail potential. This touch voltage scenario would require them to be standing or kneeling on the track bed, which is normally insulated to some extent from remote earth, particularly ballasted track areas. The rail potential will divide across the person's body impedance and the resistance between their feet or knees and remote earth. This will result in the voltage across their body being significantly less than the rail potential.

If a person touches a running rail with one foot and the other foot is on the track bed, the other foot will be insulated to some extent from remote earth. This will result in the body voltage being significantly less than the rail potential. In addition, the research on which BS EN 50122-1 is based indicates that the risks of step voltage exposure are significantly less than for touch voltage exposure (Clause 16.1 of IEEE Std 80 also notes that step voltages are inherently less dangerous than touch voltages.)

9. Rail potential management

9.1 General

Rail potential is an inherent aspect of conventional light and heavy rail systems, due to the use of the running rails as conductors for rail return current. There are a number of methods by which rail potential is either controlled or mitigated, methods which will be referred to herein as "rail potential management." The primary distinction between the various approaches to rail potential management is whether they are passive or active. Passive methods provide rail potential control through system design by adjusting design parameters such as substation spacing, rail return circuit longitudinal and shunt (leakage) resistances, and platform and infrastructure layout and electrical isolation to maintain permissible step and touch voltages. Barriers can also be employed to prevent contact with impermissible voltages. Passive measures typically require minimal maintenance as compared with the active measures. Active measures involve the control of rail potential through the use of equipment that monitors rail potential on infrastructure and reduces it at the location of application when required by temporarily connecting the infrastructure to earth or to the negative return system. Active measures have been standardized in Europe and other countries, as documented in BS EN 50122-1.

Passive and active methods commonly employed on rail transit systems are described below. Some of the passive methods may not be practical for the retrofitting of existing systems.

9.2 Substation spacing

Long-term rail potential is caused by voltage drops in the negative return system between train and wayside auxiliary equipment operating currents and the substations that provide them with power. Reducing the distance between adjacent substations reduces the voltage drop across the negative return system, thereby reducing long-term rail potential.

9.3 Track cross-bond spacing

The running rails of adjacent tracks are normally connected together by "cross-bonds" to reduce voltage drop along the rails by connecting the rails in parallel. Reducing the distance between adjacent cross-bonds reduces the voltage drop along the running rails by allowing train load and regenerative braking currents to be more effectively shared between parallel tracks. The minimum distance between adjacent cross-bonds is normally dependent on signal system operational requirements. A typical practice is to have at least one impedance bond without any cross-bonds or negative return cables between adjacent cross-bonds on each track. For

new systems or where signaling systems are being renewed or replaced, consideration should be given to the maximizing of cross-bonding for control of rail potentials.

9.4 Supplemental negative return conductors

Some of the older rail transit properties in the USA, such as the MBTA (Boston), SEPTA (Philadelphia) CTA (Chicago) and NYCT (New York City), utilize large power cables connected in parallel with the running rails to reduce voltage drop along the negative return system, which reduces rail potential and also stray current. CTA also uses the elevated track support structures for this purpose (the support structures are electrically isolated from earth). These supplemental negative return conductors are typically connected to the running rails via impedance bonds at cross-bond locations on systems that employ double rail track circuits. This practice is also noted in Kiessling [B3].

CTA connects cables, restraining rails and worn-out running rails and composite third rails in parallel with the running rails in numerous locations to reduce negative return system voltage drop. These supplemental conductors are connected to track impedance bonds at cross-bond locations. The supplemental conductors have been successfully used with audio frequency (AF) track circuits and are reported to have improved the performance of the track circuits by reducing current imbalance in track impedance bonds. NYCT has a similar practice using a supplemental return rail installed between running rail pairs, termed a "black rail."

Although not a common practice on newer rail systems, additional rails could be installed either between or adjacent to the running rails to serve as supplemental (parallel) return conductors; these would be connected to the running rails through impedance bonds, much like the application of supplemental negative return cables. Supplemental negative return rail can make use of materials such as aluminum and does not necessarily have to be drawn in the shape of a common rail. Additionally, supplemental negative rail may also serve as an inside guard (restraining) rail used on some systems to help hold trains on the right-of-way in the event of a derailment. To keep stray current leakage to a minimum, the supplemental return rails should be isolated from the track bed similar to running rails. Additional benefits from this practice would include reduced electrical (I^2R) losses in the negative return system.

9.5 System nominal voltage

The load current requirements for rail vehicles are proportional to the power system supply voltage. For example, if a train designed for operation at 750 Vdc nominal voltage were to be adapted to operate on a 1500 Vdc nominal power system, it would require approximately 50% less current. Lower load current translates into reduced voltage drops in equivalent positive supply and negative return electrical networks. This enables substations to be located farther apart and/or the use of lower cost rectification and distribution equipment. Some newer light rail systems have utilized 1500 Vdc nominal for this reason, and it appears to be a trend. However, use of 1500 Vdc for contact-rail equipped metro rail systems to date has been very limited (Beijing and Hamburg). The BART metro rail system in the San Francisco Bay area, which employs contact rail, has a 1000 Vdc nominal voltage.

Higher system nominal voltage by itself has no direct correlation with higher rail potentials. However, attempts to take full advantage of the larger substation spacings available to higher nominal voltage systems could lead to higher rail potentials; system design utilizing load flow simulation and short circuit studies can be used to predict and resolve these types of problems.

9.6 Regenerative braking

When rail vehicles utilize their propulsion motors as electrical generators for braking purposes in what is known as regenerative braking, they draw current from the running rails and inject it into the positive supply network (the reverse of normal operation). If the receptivity of the positive supply network to the regenerated power is high at the time of braking, the peak currents from regenerative braking can exceed the peak

acceleration load current for some vehicles. Thus, it is possible for a higher rail potential to occur during regenerative braking than during acceleration, although the polarity will be reversed at the train location.

9.7 Alternate system grounding methods

Rail potential in the vicinity of dc traction power substations could be reduced if the substation negative buses were grounded, either directly or through diodes; this would maintain the voltage of the running rails at the substation connection locations close to ground potential under normal operating conditions. Rail potentials could still develop at locations remote from the substations due to voltage drop along the rails. However, it has been well established that solid grounding of substation dc negative buses results in unacceptable damage from stray current corrosion, and this method of system grounding is no longer used. Metro systems that originally employed solidly grounded substations, such as the Toronto Transit Commission (TTC) and BART, have abandoned this form of system grounding (Wilson, Elieo, and Jameison [B16], Todd [B14]). TTC and BART converted their solidly grounded systems to the isolated type, using bi-directional negative grounding devices to temporarily ground the substations during positive-to-ground faults, as an aid to their detection. Diode grounding initially appeared to offer reduced stray currents while mitigating rail potential, but it also is being phased out in favor of the isolated type (Moody [B6]. Rail potential with diode-grounded substations can actually be higher than with ungrounded substations at remote locations (Yu [B18]), and stray current levels are still unacceptably high. The diodes can provide a return path to the substation dc switchgear for positive-to-ground fault currents, however, which aids in the detection and clearing of positive-to-ground faults.

Some older systems such as the MBTA and CTA have a long history with “drainage” contactors and diodes connected between metallic underground utilities and substation negative buses as part of a stray current corrosion control strategy used since circa 1920. The drainage contactors are normally closed for the older systems when the substation rectifiers are in service; the drainage diodes conduct current only when the voltage across them is positive with respect to the dc bus voltage and exceeds a fixed threshold. If drainage contactors are used on new systems, they are typically normally open. The normally closed connections appear to reduce the magnitude of negative voltage excursions at the substation negative bus and nearby running rails but have no effect on positive voltage excursions. In addition, they appear to be ineffective for both corrosion control and rail potential management where regenerative braking occurs at locations remote from substations.

9.8 Electrical isolation

The use of electrical isolation to manage rail potential typically involves one or more of the following treatments for accessible infrastructure that could either be energized by rail potential or provide a path to earth for rail potential.

a) The use of non-metallic materials for structures such as equipment supports, enclosures, platform handrails, and fencing.

b) The placing of metallic infrastructure sufficiently far from the tracks to preclude simultaneous contact with energized surfaces by persons or animals.

c) Installation of a layer of high-resistance material on standing surfaces on the system right-of-way such as station platforms.

9.9 Platform de-icing materials

Chloride-based platform de-icing materials such as sodium chloride (road salt), calcium chloride and magnesium chloride are electrolytes (electrical conductors) and will reduce the resistance between the platform surface and remote earth, increasing touch and step potentials. Alternatives to these salts such as potassium acetate (liquid) and sodium acetate (solid) and other acetate-based chemicals are better alternatives from an electrical safety standpoint, although they are more expensive. Potassium and sodium acetates are

non-chloride, high-performance products originally developed for runway deicing Acetate-based deicers are also much less corrosive with respect to steel platform infrastructure, including reinforcing steel. More information is available in Omer, Fu, Hossain, Murresan, and Hoseini [B7].

9.10 Voltage-limiting devices

Voltage-limiting device (VLD) is a term used in the BS EN 50122-1 standard, where it is defined as a protective device whose function is to prevent existence of an impermissible touch voltage. The VLD shorts (clamps or shunts) the protected infrastructure to earth or to the rail return circuit when the accessible voltage magnitude and elapsed time thresholds are exceeded. These devices are commonly used in European dc traction power systems, where they are manufactured in accordance with the definitions and technical requirements of BS EN 50122-1. A VLD product standard EN 50526-2 and associated application guide EN 50526-3 were introduced in 2014 and 2016, respectively. Voltage-limiting devices range from simple welding-shut, shorting type spark gaps to thyristor/contactor assemblies employing numerical control. Four separate classes of VLD are defined in EN 50526-2; defining characteristics of each class are summarized in Table 7. In order to qualify as an EN-compliant VLD, however, all must provide voltage limiting in accordance with the maximum permissible touch voltage tables in BS EN-50122-1 (see Table 5 above for dc electrification system voltages). In other words, these time-versus-voltage curves must be incorporated into EN-compliant voltage-limiting devices.

Table 7—VLD class characteristics

VLD Class	Switching Method	Power Supply Required	Recoverability (ability to re-open)
1	Welding shut spark gap	None (passive)	Non-recoverable
2	Unidirectional or bidirectional thyristors	None (passive)	Within rated current range; device may permanently short when above range
3	Mechanical contactor	Required	Within specified load range, can break specified load current
4	Mechanical contactor plus thyristors	Required	Within specified load range, can break specified load current

BS EN 50122-1 divides VLDs into two types, VLD-F and VLD-O, although many commercial products incorporate the characteristics of both. Four basic classifications are provided, and additional subclassifications are provided in EN-50526-2.

a) VLD-F devices provide protection against short-term impermissible touch voltages caused by short circuit (fault) currents. These devices are typically used to connect accessible metallic parts in the overhead contact line zone such as OCS poles and wayside metallic infrastructure to the rail return circuit. Their purpose is to provide a low impedance circuit for substation protective devices to enable them to quickly clear a fault.

b) VLD-O devices protect against long-term impermissible touch voltages caused by vehicle operating currents. These are typically used to connect a substation negative dc bus or the rail return system to earth ("structure earth" in BS EN 50122-1 terminology).

In countries where EN and IEC standards have been adopted, voltage-limiting devices are installed at locations where persons could potentially be exposed to impermissible touch voltages. These include station platforms, train storage/maintenance areas (depots), and metallic infrastructure near the tracks that cannot be located elsewhere or made of non-conductive materials, such as catenary poles and signal masts. Where they are installed to protect station platform areas, VLDs are connected between the station platform structure ("structure earth") and the running rails. This requires the station platform structure to be either electrically bonded together, or be connected to the equivalent of a ground mat installed below the platform surface. This requirement can complicate retrofit applications of VLDs to protect passenger station platforms.

When an impermissible voltage between the running rails and the protected infrastructure is sensed by the voltage-limiting device, it connects (shunts) the infrastructure to the earth or rail return circuit within the time requirements of BS EN 50122-1, equalizing the voltage between them. This voltage could be the result of a train load current (rail voltage rise), train regenerative braking current (rail voltage dip), or a positive-to-earth ground fault (local earth voltage rise). If the voltage-limiting device is to operate for all of these conditions, it must have bi-directional voltage sensing capability.

The class 1 VLDs are essentially sacrificial devices whose operation will permanently connect the protected infrastructure to the rail return circuit until they can be removed. Since their operation may go undetected for a period of time, the use of class 1 VLDs is not recommended.

Some of the available class 3 and 4 VLD products can be equipped with stray current monitoring systems. These systems monitor the rail-to-earth potential and the current flow through the VLD. High rail-to-earth potentials and associated stray currents can be recorded annunciated, and used as an indicator of possible contact system insulator or partial surge arrester failure, or other high-resistance ground faults.

9.11 Negative grounding devices (NGDs)

In the United States at present, the use of rail potential management devices has been limited primarily to dc traction substation locations. When installed in substations, these devices are connected between the dc negative bus and the substation grounding grid. For this reason, they are commonly referred to as “negative grounding devices (NGDs)”, the term which will be used in this clause. They are also known as “floating negative automatic grounding switches”, “rail potential control devices”, and “grounding contactors”. They perform a function similar to that of a VLD-O voltage limiting device, but do not necessarily comply with the BS EN 50122-1 standard (In other words, NGDs produced for North American application are not always manufactured in accordance with BS EN-50122-1).

In addition to limiting the rail potential in the vicinity of the substation, substation-installed NGDs can potentially assist in the detection and clearing of positive-to-earth ground faults external to the dc switchgear. As an aid to the evaluation of this possibility, a simplified circuit diagram of a typical substation NGD application during a contact system-to-ground fault is provided in Figure 3. The NGD is normally in an open state (non-conducting). As long as the NGD remains open, significant fault current cannot flow back to the substation negative dc bus, since there is only a very high resistance return path available to it. A small amount of fault current will flow into the rails near the fault via the leakage/shunt resistance of the rails, in proportion to how well they are insulated from earth. Some fault current may also return to the negative bus through stray current drainage circuits that are present in older rail transit systems, but drainage circuits are typically avoided on modern dc traction systems. After the NGD senses a triggering (turn-on) voltage difference across it and closes, the fault current will flow into and through the earth and through the substation grounding grid to the substation negative dc bus.

The fault current will be limited by the resistance of the grounding grid to remote earth, Rg. For example, if the grounding grid resistance to remote earth is 1 Ω, and the other typically smaller circuit resistances are neglected, the maximum (best case) ground fault current will be 750 V/1 Ω, or 750 A dc for a 750 Vdc nominal system. For 1500 Vdc or 1000 Vdc nominal systems, the ground fault current will be 1500 and 1000 A, respectively. These maximum available fault currents are low for purposes of typical dc feeder overcurrent protective relaying, particularly for 750 Vdc nominal systems, and will be even lower for arcing type faults. Typical substation ground grid resistance to remote earth is also more on the order of 2 Ω to 3 Ω, particularly for prefabricated substations located on compact sites. These current values may be too low for detection by current rate-of-rise protection as well, unless the “delta I” (current magnitude) settings of the rate-of-rise relays are very low. It is clear from this example that conventional dc feeder protection will have difficulty detecting arcing ground faults even with the use of substation-installed NGDs. This difficulty is one of the arguments for the use of the BS EN 50122-1 “open system earthing” grounding system design approach; if a system earthing conductor that interconnects all metallic wayside infrastructure is present, it could conduct much of the ground fault current directly to the NGD, bypassing the grounding grid resistance Rg, and thereby

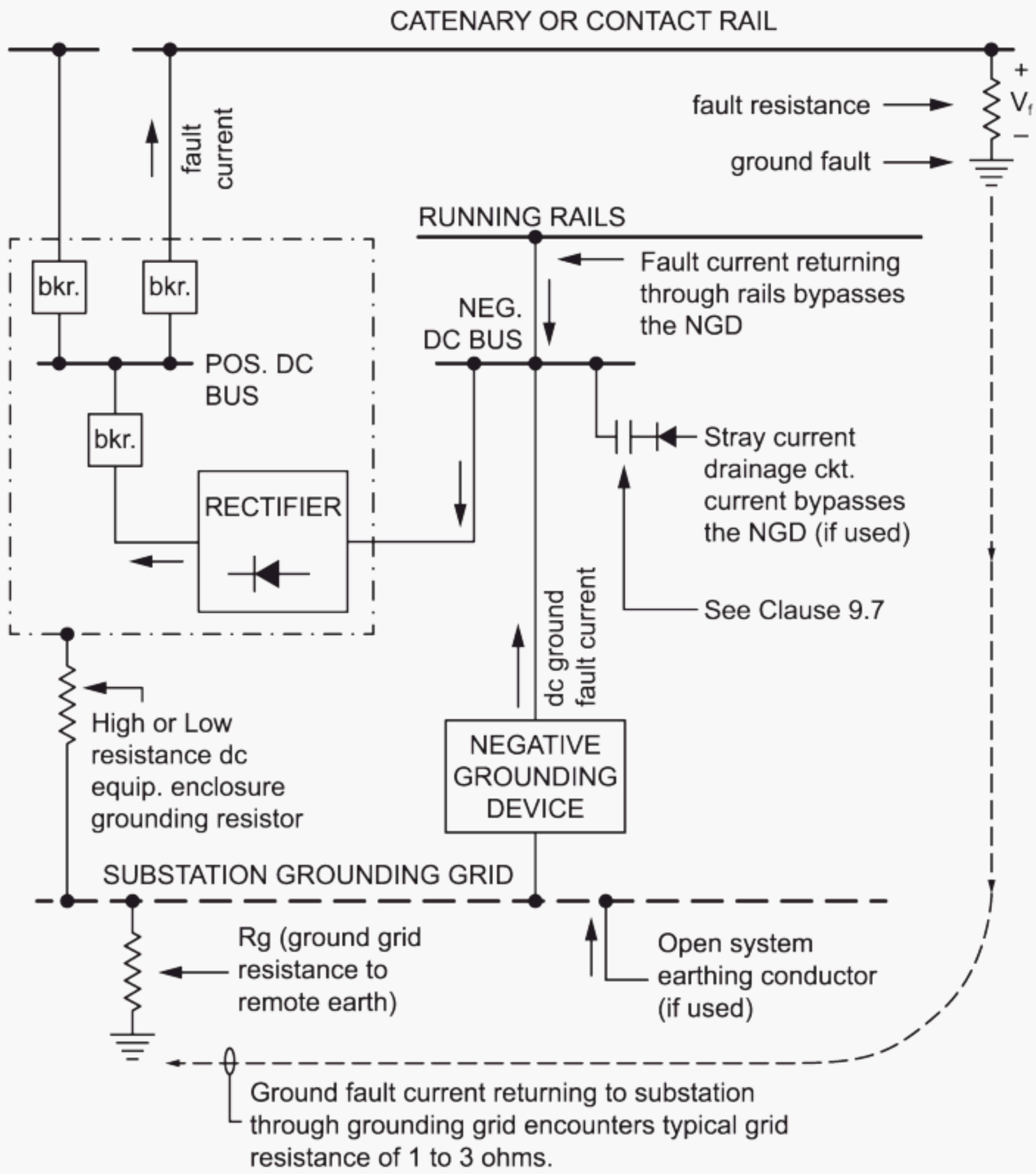

Figure 3—Substation NGD equivalent circuit during a fault

increasing the available fault current. This is illustrated on Figure 3. It is also clear that the substation grounding grid resistance Rg must be made as low as practicable for the NGD to work effectively. It is also apparent that, unless an open system earthing conductor is connected to the substation grounding grid, substation NGDs do not normally require particularly high dc fault current withstand ratings.

NGDs installed at passenger station platforms and connected between the platform and the station earth electrode would also conduct earth return type ground fault currents of reduced magnitudes as described above. However, if a light rail station platform NGD were to be connected between the station platform and a running rail, it would be required to conduct the high magnitude short circuit current that could result from a fallen catenary conductor.

Although the use of NGDs is common in the USA, particularly on newer light rail lines, there is not much project-specific information available that describes how effective they are at reducing rail potential at locations other than near substations, or their long-term impact on stray current corrosion. The material in Yu [B18] provides very helpful background in this respect, but additional research is needed in this area. In particular, it is recommended that traction power load flow simulation programs be updated to model the operation of NGDs in multiple locations under peak operating conditions, since many of them do not offer this capability at present. Theoretical calculations such as those summarized in Clause 7.2 and the simulations in

Yu [B18] confirm that the reduction in rail potential provided by a single operating NGD declines with distance from that NGD. In reference to Figure 1, temporarily grounding the negative dc bus of a single substation with an NGD will create a V-shaped rail potential characteristic; the grounded substation negative bus voltage will be the center (low point) of the V characteristic with a voltage approaching zero for a very well-grounded substation (very low value of Rg). This could increase the rail potential at remote locations (refer to Figure 2 in Yu [B18]). Preliminary load flow simulations performed by Working Group members confirm that rail potential is decreased at the location of a single closed substation NGD but increased elsewhere. However, if other locations with high expected rail potential are also equipped with NGDs, system rail potential can be controlled, although at the cost of increased stray dc current. This confirms the BS EN 50122-1 approach of locating voltage limiting devices at accessible locations of potentially high rail-to-earth voltages, rather than just in substations. Since they can increase voltages elsewhere in the system when activated, NGDs should be applied with care. Yu [B18] and Soylemez, et al., [B10] also stress the importance of the selection of appropriate NGD turn-on voltage/time combinations, turn-off currents, and minimum closure times for achieving optimum rail potential control with minimum stray current impacts. In general, it is recommended that the load flow simulation studies on which new electrification system designs will be based confirm that rail potentials will remain below maximum permissible levels under all anticipated operating conditions without the need for NGDs.

Soylemez, et al., [B10] indicates that NGD turn-on settings that are too low will not provide reductions in rail potential and will significantly increase stray dc currents. Soylemez, et al., [B10] also notes that the effectiveness of NGDs in controlling touch voltages is greatly improved by a very low grounding grid resistance Rg; a maximum Rg of 0.5 Ω is recommended by these authors for NGD effectiveness, and they also note that dramatic improvement occurs with an R_g of 0.10 Ω or less, which is difficult to achieve. It also describes a threshold criterion termed "rail voltage limit", that can be determined by load flow/NGD simulation of a dc traction power system; this is the setting below which NGDs will offer no reduction in touch voltage.

Some transit systems have used substation-installed NGDs to automatically trip substation feeder breakers upon detection of a high rail-to-earth voltage. This practice has occasionally resulted in nuisance breaker tripping, particularly during initial revenue operations. The cause for the nuisance tripping is typically an instantaneous voltage trip setpoint that is below the actual rail-to-earth voltage or an insufficient time delay in the rail-to-earth voltage measurement trip setpoint; however, inadvertent track grounding, insufficient track isolation and partially-failed surge arresters have been known to "fool" some NGDs into nuisance operation. For these reasons, it is suggested that substation NGDs be configured to alarm/annunciate high rail-to-earth voltages rather than automatically tripping substation feeder breakers. This approach permits the system operator to respond appropriately depending on the location, magnitude, and timing of the event. It should also be clear that, if a substation NGD has operated due to high positive rail-to-earth voltage and has clamped the negative dc bus to the substation ground grid, high rail-to-earth voltages will no longer be present at that substation as long as the NGD remains closed.

10. Rail potential management guidelines - summary

10.1 Passive versus active rail potential management approaches

As noted in Clause 9, rail potential management approaches can be generally grouped into passive and active classifications. Passive methods provide rail potential control through system design by adjusting design parameters such as substation spacing, rail return circuit longitudinal and shunt (leakage) resistances, and platform and infrastructure layout, electrical isolation, and barriers to maintain permissible accessible step and touch voltages. Active measures involve the control of rail potential through the use of equipment that monitors rail potential on infrastructure and reduces it when required at the location of application by temporarily connecting the infrastructure to the negative return system. The passive approach is preferred for new system construction, with voltage limiting devices being used for backup protection only, if at all. For existing electrification systems that are supporting rail service levels that exceed their original design criteria, the passive approach alone may not be sufficient.

10.2 Permissible voltages

Rail potential limits for dc traction power systems in European countries are based on substantial research that has been codified in the form of European Standards that have the authority of national standards for member countries. Since equivalent standards do not yet exist in the USA, USA practice with respect to rail potential limits has tended to be more anecdotal. Based on the evidence provided in this guide, it is suggested that adoption of the maximum permissible effective touch voltages from BS EN 50122-1 as maximum rail potentials be considered, along with their specified time durations. Or, more simply, BS EN 50122-1 could be adopted as a design standard by individual transit agencies. Additional reasons for this suggestion include the following:

a) The maximum permissible effective touch voltages listed in BS EN 50122-1 do not include the beneficial effects of the resistance between a person's shoes and remote earth ("standing surface"), which will reduce current flow through the body. In a rail transit environment, standing surface resistance is always present. This means that the touch voltage actually experienced by a person at location on the right-of-way will be lower than the rail potential at that location.

b) The maximum permissible touch voltages in BS EN 50122-1 do not include the beneficial effects of an additional high-resistivity layer of material between the standing surface and remote earth, which will further reduce current flow through the body even when the material is wet. In a rail transit environment, this layer is typically present in the form of passenger station insulating materials, track ballast, or asphalt.

c) The rail potentials calculated by load flow simulation programs are rail-to-remote-earth values, and are based on combinations of worst-case conditions and design criteria. For typical systems, the applicable criteria may include 5% to 10% running rail wear, running rail resistances based on summer peak ambient temperature conditions, negative return cable resistances based on rated operating temperatures, and track-to-earth resistance of 500 Ω per 1000 ft of single track (pair of running rails). When combined as input to a load flow simulation program, these criteria tend to produce rail potentials that are higher than actual. For example, 10% rail wear will not occur for many years after installation, if at all, and even then, only in specific locations such as curves (European practice is to use 5% rail wear in simulations). Track-to-earth resistance will also decline with time, which will tend to reduce rail potential.

d) Load flow simulation programs typically model a train load as a single point ("node"). For long metro/heavy rail trains, this practice can result in calculated rail potentials that are higher than actual.

e) The duration of peak rail potential is typically less than five seconds.

As a cautionary measure, the BS EN 50122-1 maximum permissible effective touch voltages could be reduced by a "safety factor." At least one European country has adopted this approach in their country's version of BS EN 50122-1. But as discussed in this guide, the worst-case body voltages (hand-to-feet) that could be experienced by persons would always be less than the BS EN 50122-1 maximum permissible effective touch voltages, and often significantly less.

Annex A

(informative)

Equivalent touch voltage circuits

This annex provides touch voltage equivalent circuits that are used as the basis for IEEE Std 80 and BS EN 50122-1 touch voltage calculations.

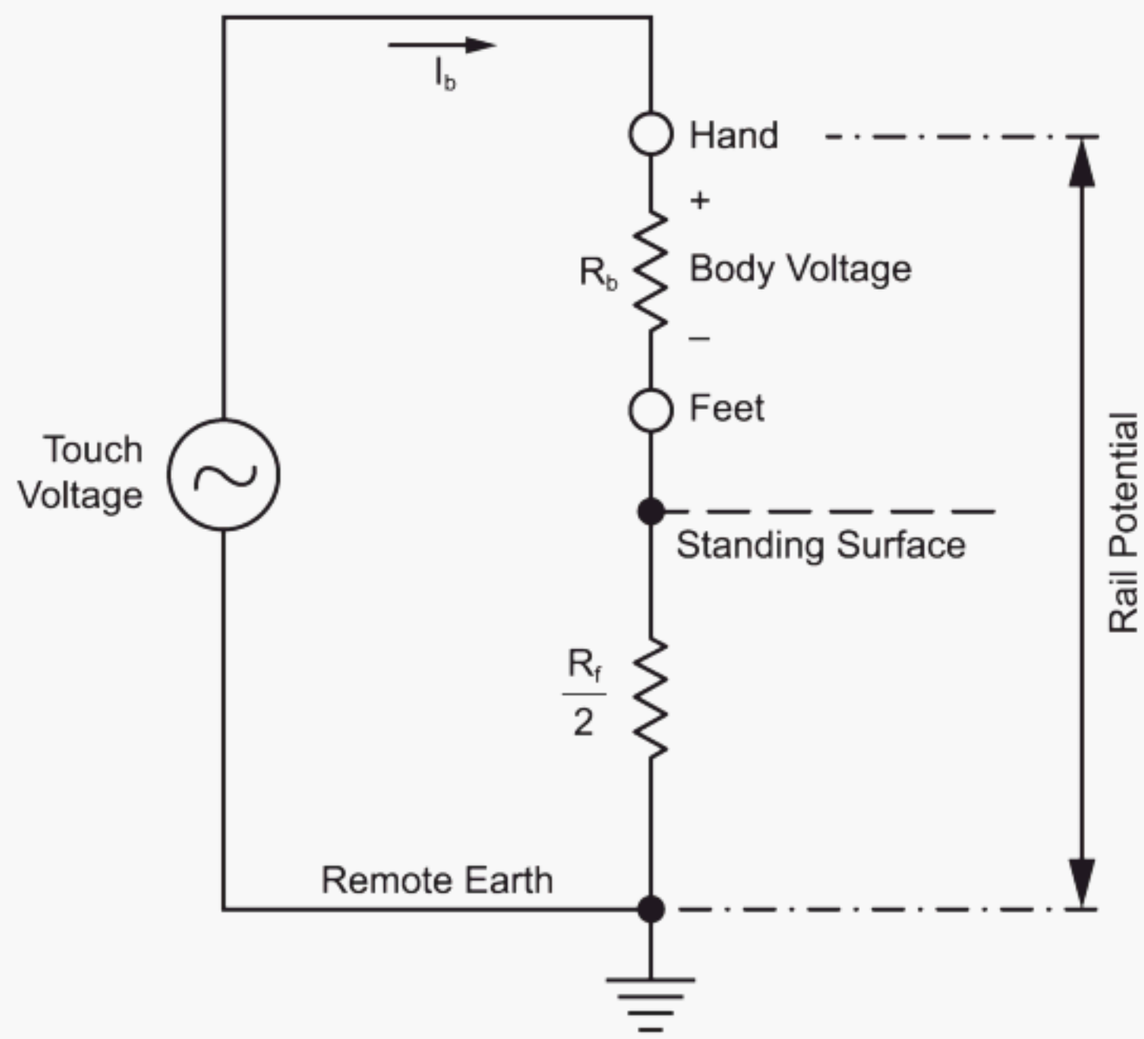

Touch Voltage Circuit in IEEE Std. 80

R_b is the body resistance (1000 Ω).

I_b is the body current.

R_f is the resistance to remote earth of one (bare) foot.

$R_f/2 = 1.5\rho$ for touch voltages, where ρ is the homogeneous resistivity of the standing surface.

$R_f/2 = 1.5\rho_s C_s$ if a thin layer of high resistivity material ρ_s is placed on the standing surface, with C_s representing the surface layer derating factor. The resistivity of the thin top layer must behigher than the resistivity of the underlying soil; refer to 7.4 in IEEE Std 80-2013.

Figure A.1—IEEE Std 80 touch voltage circuit

The touch voltage source in the IEEE Std 80 touch voltage circuit is the voltage when the person is not present in the circuit, which is also referred to as the prospective voltage. It is the same as the rail potential.

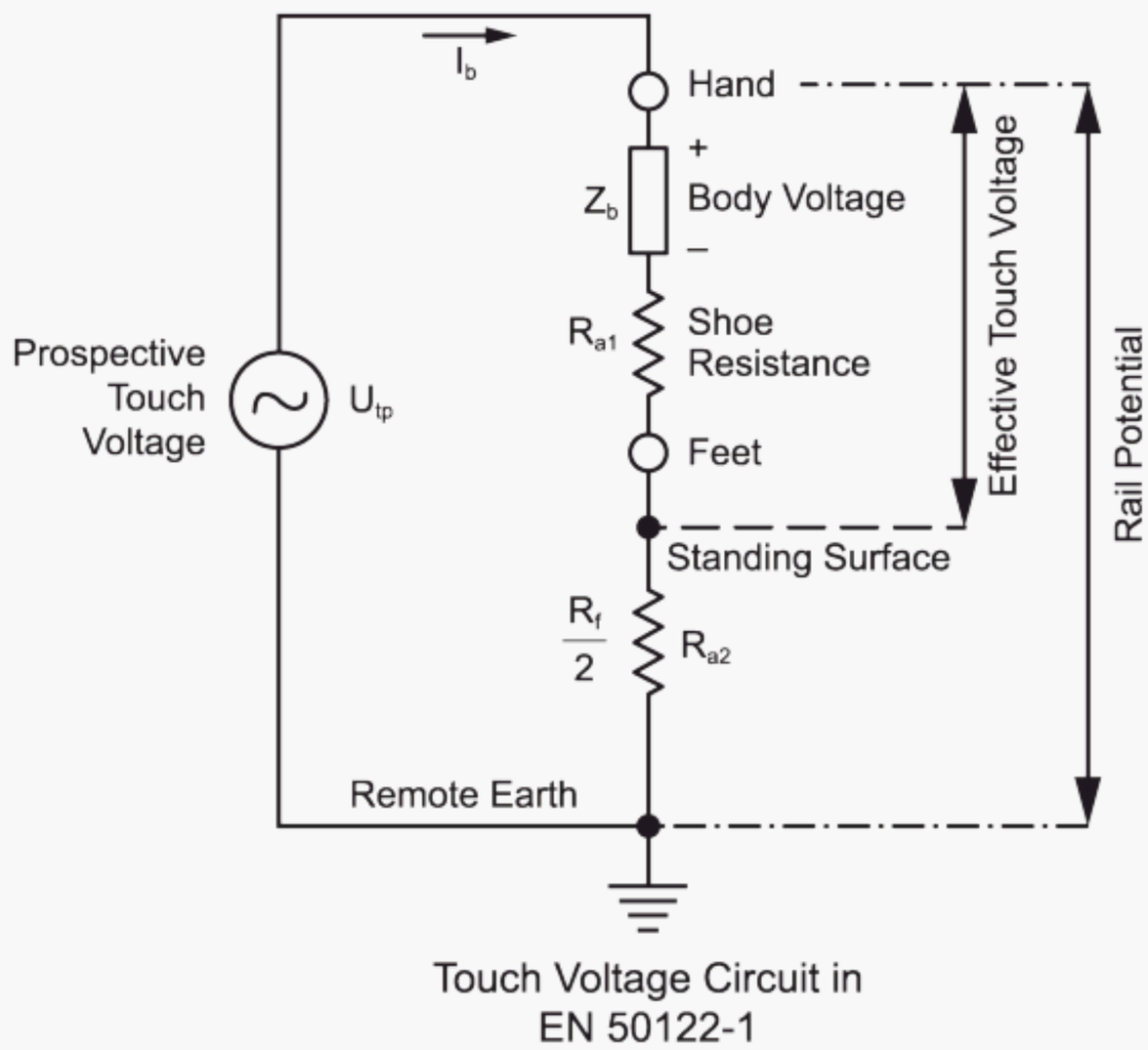

Z_b is the total body impedance.

I_b is the body current.

R_{a1} is the additional shoe resistance (1000 Ω) for short-term conditions only (< 0.7 s).

R_f is the resistance to remote earth of 1 ft.

$R_f/2 = R_{a2} = 1.5\rho$, where ρ is the homogeneous resistivity of the standing surface. The additional resistance of the standing surface R_{a2} is not included in the development the BS EN 50122-1 maximum permissible effective voltage tables.

The prospective touch voltage U_{tp} is the same as the rail potential.

Figure A.2—BS EN 50122-1 touch voltage circuit

Annex B

(informative)

DC electrical resistances for common running rail types

This annex provides a table containing the resistance to dc of typical North American light and heavy rail running rail sections. The values provided in Table B.1 should be considered typical, but approximate. For example, Mariscotti and Possobon [B5] notes that "Rails are often considered to be a structural element of the railway system and attention is focused on mechanical characteristics; so, information on electrical characteristics generally is neither complete nor reliable and is derived from practical formulas, few sample data from the literature, and historical data based on practice and convention." Similar observations are provided in Mariscotti [B4], including " the lack of standardization for acceptable or limit values, the poor coverage in manufacturers' datasheets (that rarely report the dc resistance, not to say the temperature dependency or the internal impedance), and a general shortage of technical specifications and literature references, that would be a valuable input to design." Technical specifications for electrified transportation system running rail procurement in North America typically do not include requirements for electrical resistance or resistivity.

The primary source for the dc rail volume resistivity ρ and temperature resistance coefficient α on which the per unit resistances in Table B.1 are calculated in Kiessling [B3], which cites 22.2 μΩ-cm at 20 °C and 0.0047/°C, respectively. This resistivity value is supported by the following other sources:

a) A resistivity value of 22.01 μΩ-cm cited in the 2020 Nippon Steel Corp. K003en_02_202004f Rails Catalog for "standard rail."

b) Measurements in Trueblood and Wascheck [B15] that were performed in the 1929 to 1930 timeframe on 60 to 130 lb./yd rail samples with results indicating an increase of resistivity with rail section size; 100 and 130 lb./yd rail had measured resistivities of 21.7 and 22.0 μΩ-cm at 70 °F, respectively.

c) The 1987 Standard Handbook for Electrical Engineers (12th Ed.) notes that the volume resistivity of steel rails produced by the open-hearth method varies from 16.6 to 22.4 μΩ-cm.

The 1917 Handbook for Electrical Engineers (1st Ed.) calculates the resistance of ASCE type rail sections by using a factor of 12.5 times the resistance of 100% conductivity copper. The 1949 Electrical Engineers' Handbook (4th Ed.) adopts the same approach. The International Annealed Copper Standard (IACS) resistivity of 100% conductivity copper is 1.7241 μΩ-cm at 20 °C. The resistivity value of 22.2 μΩ-cm selected for Table B.1 corresponds to a 12.9 steel rail resistivity/copper resistivity factor.

Table B.1—Running rail resistances to dc

Running rail information			Electrical resistance at indicated operating temp.			
Rail Section	Section Area (sq. in.)	Resistivity (μΩ-cm)	Ω/mi at 20 °C	Ω/mi at 40 °C	Ω/mi at 60 °C	Ω/mi at 75 °C
85 lb. ASCE	8.33	22.2	0.0665	0.0727	0.0864	0.1087
90 lb. ARA-A	8.82	22.2	0.0628	0.0687	0.0816	0.1027
100 lb. RE	9.95	22.2	0.0557	0.0609	0.0723	0.0910
115 lb. RE	11.25	22.2	0.0492	0.0539	0.0640	0.0805
119 lb. RE	11.65	22.2	0.0475	0.0520	0.0618	0.0777
132 lb. RE	12.95	22.2	0.0428	0.0468	0.0556	0.0699
136 lb. RE	13.35	22.2	0.0415	0.0454	0.0539	0.0678

ASTM Standard A1, Standard Specification for Carbon Steel Tee Rails, is commonly used for rail procurement in North America. Standard A1 does not include any requirements for rail electrical resistance or volume resistivity. It divides steel rail into three separate classifications based on rail section size: 60–84 lb./yd, 85 to 114 lb./yd and 115 lb./yd and above. Each of these classifications have different ranges of chemical composition and Brinell rail head hardness requirements. DC rail resistivity normally varies with chemical composition and with heat treatment. Rails with higher tensile strength and higher Brinell hardness typically have higher resistivity. For these reasons, it is recommended to obtain measured or quoted resistivity values from rail manufacturers, and to include volume resistivity parameters in rail procurement specifications. Table B.1 can be used when these quoted or measured values are not available.

The impedance of steel rails to ac is not in the scope of this guide, which is intended for dc-electrified rail systems. The impedance of steel rails to ac increases significantly with increasing frequency and with increasing load current. For additional information refer to Kiessling [B3], Mariscotti and Possobon [B5], and Mariscotti [B4]. Trueblood [B15] provides rail impedance measurements for both alternating and dc.

Annex C

(informative)

Bibliography

Bibliographical references are resources that provide additional or helpful material but do not need to be understood or used to implement this standard. Reference to these resources is made for informational use only.

[B1] Birbeck, J., R. Smiley, G. Stowell, and E. Newman-Sanders, "Engineering Design of the Platform Edge Screens for the Elizabeth Line's Tunnel Stations," *The Structural Engineer*, July 2018.

[B2] BS EN 50122-2, Railway applications – Fixed installations - Electrical safety, earthing and the return circuit, Part 2: Provisions against the effects of stray currents caused by d.c. traction systems.[8]

[B3] Kiessling, F., Contact Lines for Electric Railways: Planning, Design, Implementation, Maintenance, 3rd ed. Erlangen, Publicis Publishing, Erlangen, 2018.

[B4] Mariscotti, A., "Impact of Rail Impedance Intrinsic Variability on Railway System Operation, EMC and Safety," Iranian Journal of Electrical and Computer Engineering, vol. 11, no. 1, pp. 17–26, February 2021.

[B5] Mariscotti, A. and P. Pozzobon, "Resistance and Internal Inductance of Traction Rails at Power Frequency: A Survey," IEEE Transactions on Vehicular Technology, vol. 53, no. 4, pp. 1069–1075, July 2004.[9]

[B6] Moody, K. J., "Stray Current Characteristics of Grounded, Ungrounded and Diode Grounded DC Transit Systems," NACE Corrosion Conference, Baltimore, MD, Dec. 1994.

[B7] Omer, R., Fu, L., Hossain, S. M. K., Muresan, M., Hoseini, F., "Evaluation and Optimization of Winter Snow and Ice Control for Railway Platforms," *iTSS Lab, Department of Civil & Environmental Engineering, University of Waterloo*, Sept. 2013.

[B8] Riordan, J., "Current Propagation in Electric Railway Propulsion Systems," Transactions of the American Institute of Electrical Engineers, vol. 51, no. 4, pp. 1011–1019, December 1932.

[B9] Sim, W. M., M. Thong, and C. F. Chan, "Touch Voltage Protection of Singapore MRT System," 2005 International Power Engineering Conference, Singapore, Dec. 2005.

[B10] Soylemez, Mehmet Turan, Acikbas, S., Kaypmaz, A., "Controlling Rail Potential of DC Supplied Rail Traction Systems," *Turk J Elec. Engin.*, vol. 14, no. 3, Jan. 2006.[10]

[B11] Stell, B. R. W., "Maximum Permissible Rail Potential in DC Traction Power Systems," IEEE Vehicular Technology Magazine, vol. 6, no. 3, pp. 99–105, August 2011.

[B12] Sunde, E. D., "Currents and Potentials Along Leaky Ground-Return Conductors," Electrical Engineering, vol. 55, no. 12, pp. 1338–1346, December 1936.

[B13] Sunde, E. D., Earth Conduction Effects in Transmission Systems. New York: D. Van Nostrand Company, Inc., 1949.

[8]EN publications are available from the European Committee for Standardization (CEN) (https://www.cen.eu/).
[9]IEEE publications are available from The Institute of Electrical and Electronics Engineers (https://standards.ieee.org/).
[10]Available at: https://journals.tubitak.gov.tr/elektrik/issues/elk-06-14-3/elk-14-3-9-0606-7.pdf.

[B14] Todd, P., "BART Stray Current Prevention," NACE Corrosion Conference, March,1994.[11]

[B15] Trueblood, H. and G. Wascheck, "Investigation of Rail Impedances," Electrical Engineering, vol. 52, no. 12, pp. 898–907, December 1933.

[B16] Wilson, R., J. Elieo, and J. Jameison, "Solid State Solutions to Stray Current Control – Toronto Transit Commission," NACE Corrosion Conference, April 1984.

[B17] Yu, J. G. and C. J. Goodman, "Modelling of Rail Potential Rise and Leakage Current in DC Rail Transit Systems," *IEE Colloquium on Stray Current Effects of DC Railways and Tramways*, pp. 2/2/1–2/2/6, Oct. 1990.

[B18] Yu, J. G., "The Effects of Earthing Strategies on Rail Potential and Stray Currents in D.C. Transit Railways," Int. Conf. on Developments in Mass Transit Systems, London, pp. 303−309, Apr. 1998 .

[11]ASM International publications are available from the American Society for Metals (https://www.asminternational.org/).

IEEE SA
STANDARDS ASSOCIATION

RAISING THE WORLD'S STANDARDS

Connect with us on:

Twitter: twitter.com/ieeesa
Facebook: facebook.com/ieeesa
LinkedIn: linkedin.com/groups/1791118
Beyond Standards blog: beyondstandards.ieee.org
YouTube: youtube.com/ieeesa

standards.ieee.org
Phone: +1 732 981 0060

IEEE