# IEEE Standard for Pole Line Hardware for Overhead Line Construction

IEEE Power and Energy Society

Sponsored by the

Transmission and Distribution Committee

IEEE
3 Park Avenue
New York, NY 10016-5997
USA

IEEE Std C135.90™-2014

Authorized licensed use limited to: University of Waterloo. Downloaded on January 13,2016 at 09:00:48 UTC from IEEE Xplore. Restrictions apply.

Authorized licensed use limited to: University of Waterloo. Downloaded on January 13,2016 at 09:00:48 UTC from IEEE Xplore. Restrictions apply.

# IEEE Standard for Pole Line Hardware for Overhead Line Construction

Sponsor

**Transmission and Distribution Committee**
of the
**IEEE Power and Energy Society**

Approved 27 March 2014

**IEEE-SA Standards Board**

Authorized licensed use limited to: University of Waterloo. Downloaded on January 13,2016 at 09:00:48 UTC from IEEE Xplore. Restrictions apply.

**Abstract:** This standard covers the requirements of inch-based wood pole line hardware commonly used in overhead line construction. Metric pole line hardware is not covered by this standard.

**Keywords:** hardware, IEEE C135.90™, line, overhead, pole, wood

The Institute of Electrical and Electronics Engineers, Inc.
3 Park Avenue, New York, NY 10016-5997, USA

Copyright © 2014 by The Institute of Electrical and Electronics Engineers, Inc
All rights reserved. Published 28 May 2014. Printed in the United States of America.

IEEE is a registered trademark in the U.S. Patent & Trademark Office, owned by The Institute of Electrical and Electronics Engineers, Incorporated.

PDF: ISBN 978-0-7381-9074-7 STD98626
Print: ISBN 978-0-7381-9075-4 STDPD98626

*IEEE prohibits discrimination, harassment, and bullying.*
*For more information, visit http://www.ieee.org/web/aboutus/whatis/policies/p9-26.html.*
*No part of this publication may be reproduced in any form, in an electronic retrieval system or otherwise, without the prior written permission of the publisher.*

Authorized licensed use limited to: University of Waterloo. Downloaded on January 13,2016 at 09:00:48 UTC from IEEE Xplore. Restrictions apply.

## Important Notices and Disclaimers Concerning IEEE Standards Documents

IEEE documents are made available for use subject to important notices and legal disclaimers. These notices and disclaimers, or a reference to this page, appear in all standards and may be found under the heading "Important Notice" or "Important Notices and Disclaimers Concerning IEEE Standards Documents."

## Notice and Disclaimer of Liability Concerning the Use of IEEE Standards Documents

IEEE Standards documents (standards, recommended practices, and guides), both full-use and trial-use, are developed within IEEE Societies and the Standards Coordinating Committees of the IEEE Standards Association ("IEEE-SA") Standards Board. IEEE ("the Institute") develops its standards through a consensus development process, approved by the American National Standards Institute ("ANSI"), which brings together volunteers representing varied viewpoints and interests to achieve the final product. Volunteers are not necessarily members of the Institute and participate without compensation from IEEE. While IEEE administers the process and establishes rules to promote fairness in the consensus development process, IEEE does not independently evaluate, test, or verify the accuracy of any of the information or the soundness of any judgments contained in its standards.

IEEE does not warrant or represent the accuracy or content of the material contained in its standards, and expressly disclaims all warranties (express, implied and statutory) not included in this or any other document relating to the standard, including, but not limited to, the warranties of: merchantability; fitness for a particular purpose; non-infringement; and quality, accuracy, effectiveness, currency, or completeness of material. In addition, IEEE disclaims any and all conditions relating to: results; and workmanlike effort. IEEE standards documents are supplied "AS IS" and "WITH ALL FAULTS."

Use of an IEEE standard is wholly voluntary. The existence of an IEEE standard does not imply that there are no other ways to produce, test, measure, purchase, market, or provide other goods and services related to the scope of the IEEE standard. Furthermore, the viewpoint expressed at the time a standard is approved and issued is subject to change brought about through developments in the state of the art and comments received from users of the standard.

In publishing and making its standards available, IEEE is not suggesting or rendering professional or other services for, or on behalf of, any person or entity nor is IEEE undertaking to perform any duty owed by any other person or entity to another. Any person utilizing any IEEE Standards document, should rely upon his or her own independent judgment in the exercise of reasonable care in any given circumstances or, as appropriate, seek the advice of a competent professional in determining the appropriateness of a given IEEE standard.

IN NO EVENT SHALL IEEE BE LIABLE FOR ANY DIRECT, INDIRECT, INCIDENTAL, SPECIAL, EXEMPLARY, OR CONSEQUENTIAL DAMAGES (INCLUDING, BUT NOT LIMITED TO: PROCUREMENT OF SUBSTITUTE GOODS OR SERVICES; LOSS OF USE, DATA, OR PROFITS; OR BUSINESS INTERRUPTION) HOWEVER CAUSED AND ON ANY THEORY OF LIABILITY, WHETHER IN CONTRACT, STRICT LIABILITY, OR TORT (INCLUDING NEGLIGENCE OR OTHERWISE) ARISING IN ANY WAY OUT OF THE PUBLICATION, USE OF, OR RELIANCE UPON ANY STANDARD, EVEN IF ADVISED OF THE POSSIBILITY OF SUCH DAMAGE AND REGARDLESS OF WHETHER SUCH DAMAGE WAS FORESEEABLE.

Authorized licensed use limited to: University of Waterloo. Downloaded on January 13,2016 at 09:00:48 UTC from IEEE Xplore. Restrictions apply.

## Translations

The IEEE consensus development process involves the review of documents in English only. In the event that an IEEE standard is translated, only the English version published by IEEE should be considered the approved IEEE standard.

## Official statements

A statement, written or oral, that is not processed in accordance with the IEEE-SA Standards Board Operations Manual shall not be considered or inferred to be the official position of IEEE or any of its committees and shall not be considered to be, or be relied upon as, a formal position of IEEE. At lectures, symposia, seminars, or educational courses, an individual presenting information on IEEE standards shall make it clear that his or her views should be considered the personal views of that individual rather than the formal position of IEEE.

## Comments on standards

Comments for revision of IEEE Standards documents are welcome from any interested party, regardless of membership affiliation with IEEE. However, IEEE does not provide consulting information or advice pertaining to IEEE Standards documents. Suggestions for changes in documents should be in the form of a proposed change of text, together with appropriate supporting comments. Since IEEE standards represent a consensus of concerned interests, it is important that any responses to comments and questions also receive the concurrence of a balance of interests. For this reason, IEEE and the members of its societies and Standards Coordinating Committees are not able to provide an instant response to comments or questions except in those cases where the matter has previously been addressed. For the same reason, IEEE does not respond to interpretation requests. Any person who would like to participate in revisions to an IEEE standard is welcome to join the relevant IEEE working group.

Comments on standards should be submitted to the following address:

Secretary, IEEE-SA Standards Board
445 Hoes Lane
Piscataway, NJ 08854 USA

## Laws and regulations

Users of IEEE Standards documents should consult all applicable laws and regulations. Compliance with the provisions of any IEEE Standards document does not imply compliance to any applicable regulatory requirements. Implementers of the standard are responsible for observing or referring to the applicable regulatory requirements. IEEE does not, by the publication of its standards, intend to urge action that is not in compliance with applicable laws, and these documents may not be construed as doing so.

## Copyrights

IEEE draft and approved standards are copyrighted by IEEE under U.S. and international copyright laws. They are made available by IEEE and are adopted for a wide variety of both public and private uses. These include both use, by reference, in laws and regulations, and use in private self-regulation, standardization, and the promotion of engineering practices and methods. By making these documents available for use and adoption by public authorities and private users, IEEE does not waive any rights in copyright to the documents.

Authorized licensed use limited to: University of Waterloo. Downloaded on January 13,2016 at 09:00:48 UTC from IEEE Xplore. Restrictions apply.

## Photocopies

Subject to payment of the appropriate fee, IEEE will grant users a limited, non-exclusive license to photocopy portions of any individual standard for company or organizational internal use or individual, non-commercial use only. To arrange for payment of licensing fees, please contact Copyright Clearance Center, Customer Service, 222 Rosewood Drive, Danvers, MA 01923 USA; +1 978 750 8400. Permission to photocopy portions of any individual standard for educational classroom use can also be obtained through the Copyright Clearance Center.

## Updating of IEEE Standards documents

Users of IEEE Standards documents should be aware that these documents may be superseded at any time by the issuance of new editions or may be amended from time to time through the issuance of amendments, corrigenda, or errata. An official IEEE document at any point in time consists of the current edition of the document together with any amendments, corrigenda, or errata then in effect.

Every IEEE standard is subjected to review at least every ten years. When a document is more than ten years old and has not undergone a revision process, it is reasonable to conclude that its contents, although still of some value, do not wholly reflect the present state of the art. Users are cautioned to check to determine that they have the latest edition of any IEEE standard.

In order to determine whether a given document is the current edition and whether it has been amended through the issuance of amendments, corrigenda, or errata, visit the IEEE-SA Website at http://ieeexplore.ieee.org/xpl/standards.jsp or contact IEEE at the address listed previously. For more information about the IEEE-SA or IEEE's standards development process, visit the IEEE-SA Website at http://standards.ieee.org.

## Errata

Errata, if any, for all IEEE standards can be accessed on the IEEE-SA Website at the following URL: http://standards.ieee.org/findstds/errata/index.html. Users are encouraged to check this URL for errata periodically.

## Patents

Attention is called to the possibility that implementation of this standard may require use of subject matter covered by patent rights. By publication of this standard, no position is taken by the IEEE with respect to the existence or validity of any patent rights in connection therewith. If a patent holder or patent applicant has filed a statement of assurance via an Accepted Letter of Assurance, then the statement is listed on the IEEE-SA Website at http://standards.ieee.org/about/sasb/patcom/patents.html. Letters of Assurance may indicate whether the Submitter is willing or unwilling to grant licenses under patent rights without compensation or under reasonable rates, with reasonable terms and conditions that are demonstrably free of any unfair discrimination to applicants desiring to obtain such licenses.

Essential Patent Claims may exist for which a Letter of Assurance has not been received. The IEEE is not responsible for identifying Essential Patent Claims for which a license may be required, for conducting inquiries into the legal validity or scope of Patents Claims, or determining whether any licensing terms or conditions provided in connection with submission of a Letter of Assurance, if any, or in any licensing agreements are reasonable or non-discriminatory. Users of this standard are expressly advised that determination of the validity of any patent rights, and the risk of infringement of such rights, is entirely their own responsibility. Further information may be obtained from the IEEE Standards Association.

Authorized licensed use limited to: University of Waterloo. Downloaded on January 13,2016 at 09:00:48 UTC from IEEE Xplore. Restrictions apply.

## Participants

At the time this IEEE standard was completed, the Overhead Line Structural Materials and Hardware Working Group had the following membership:

**Keith Lindsey**, *Chair*
**Tom McCarthy**, *Vice Chair*

Dick Aichinger
Mehmet Arslan
Tony Baker
Yair Berenstein
Allen Bernstorf
Nelson Bingel
Tom Bozeman
Michael Brucato
Bill Calhoun
Jerry Checks
Allen Clapp
Len Consalvo
Glenn Davidson
Mike Della Vecchia
Nicholas DeSantis
Tony DiGioia
Michael Dolan
Bruce Freimark
Erich Gnandt
Waymon Goch
Asim Haldar
Steve Harrizon
Ibrahim Hathout
Donald Heald
Michael Hudgens
Magdi Ishac
Doug Jones
Jacob Joplin
Mark Jurgemeyer
Kenneth Keller
Bob Kluge
Samy Krishnasamy
Brian Lacoursiere
Hong To Lam
Jim Larkey
Keith Lindsey
Ming Lu
Otto Lynch
Tom McCarthy
Ray McCoy
Steven Miller
May Milles
Robert Milles
Roger Montambo
George Niles
John Olenic
Bob Oswald
Doug Proctor
Brian Reed
Rafael Rios
Karen Rowe
Ron Rowland
Robert Santarsiero
Ross Smith
Steve Smith
Eric Stemshorn
Andrew Stewart
Carl Tamm
Vinh Tran
Larry Vandergriend
Jeff Wan
Ed West

The following members of the individual balloting committee voted on this standard. Balloters may have voted for approval, disapproval, or abstention.

Saleman Alibhay
Anthony Baker
Harvey Bowles
William Byrd
Thomas Callsen
James Chapman
Robert Christman
Glenn Davidson
Gary Donner
Randall Dotson
Gary Engmann
David Gilmer
Waymon Goch
Edwin Goodwin
Charles Grose
Randall Groves
Jeffrey Hartenberger
Lee Herron
Werner Hoelzl
Magdi Ishac
Mark Jurgemeyer
Gael Kennedy
Robert Kluge
Joseph L. Koepfinger
Jim Kulchisky
Chung-Yiu Lam
Paul Lindemulder
Greg Luri
William McBride
Thomas McCarthy
Gary Michel
Arthur Neubauer
Michael Newman
Carl Orde
Lorraine Padden
Bansi Patel
Robert Peters
Douglas Proctor
Keith Reese
Michael Roberts
Stephen Rodick
Thomas Rozek
Bartien Sayogo
Dennis Schlender
Gil Shultz
Jeremy Smith
Jerry Smith
Gary Stoedter
John Toth
John Vergis
Daniel Ward
Luis Zambrano


Copyright © 2014 IEEE. All rights reserved.

Authorized licensed use limited to: University of Waterloo. Downloaded on January 13,2016 at 09:00:48 UTC from IEEE Xplore. Restrictions apply.

When the IEEE-SA Standards Board approved this standard on 27 March 2014, it had the following membership:

**John Kulick**, *Chair*
**Jon Walter Rosdahl**, *Vice-chair*
**Richard H. Hulett**, *Past Chair*
**Konstantinos Karachalios**, *Secretary*

Peter Balma
Farooq Bari
Ted Burse
Clint Chaplain
Stephen Dukes
Jean-Phillippe Faure
Gary Hoffman
Michael Janezic
Jeffrey Katz
Joseph L. Koepfinger*
David Law
Hung Ling
Oleg Logvinov
Ted Olsen
Glenn Parsons
Ron Peterson
Adrian Stephens
Peter Sutherland
Yatin Trivedi
Phil Winston
Don Wright
Yu Yuan

*Member Emeritus

Also included are the following nonvoting IEEE-SA Standards Board liaisons:

Richard DeBlasio, *DOE Representative*
Michael Janezic, *NIST Representative*

Don Messina
*IEEE Standards Program Manager, Document Development*

Erin Spiewak
*IEEE Standards Program Manager, Technical Program Development*


Copyright © 2014 IEEE. All rights reserved.

Authorized licensed use limited to: University of Waterloo. Downloaded on January 13,2016 at 09:00:48 UTC from IEEE Xplore. Restrictions apply.

## Introduction

This introduction is not part of IEEE Std C135.90-2014, IEEE Standard for Pole Line Hardware for Overhead Line Construction.

This standard combines the following standards for wood pole line hardware for overhead line construction:

— ANSI C135.22, ANSI Standard for Zinc-Coated Ferrous Pole-Top Insulator Pins with Threads for Overhead Line Construction.[a]

— IEEE PC135.11, Draft Standard for Zinc-coated Ferrous Guy Attachments, Wrap and Formed Guy Hooks, Guy Strain Plates, and Pole Eye Plates for Overhead Line Construction.[b]

— IEEE Std C135.2™, IEEE Standard for Threaded Zinc-Coated Ferrous Strand-Eye Anchor Rods and Nuts for Overhead Line Construction.[c,d]

— IEEE Std C135.12™, IEEE Standard for Pole Guards.

— IEEE Std C135.17™, IEEE Standard for Zinc-Coated Ferrous Bolt-Type Insulator Pins with Threads Used with Pin Type Insulators for Overhead Line Construction.

— IEEE Std C135.33™, IEEE Standard for Galvanized Ferrous Crossarm Gains for Overhead Line Construction.

— NEMA PH11, NEMA Standards for Galvanized Ferrous Guy Attachments, Wrap and Formed Guy Hooks, Guy Strain Plates and Pole Eye Plates.[e]

— NEMA PH23, NEMA Standards for Steel and Malleable Iron Guy Clamps.

---

[a] ANSI publications are available from the American National Standards Institute (http://www.ansi.org).
[b] This IEEE project was withdrawn in December 2010.
[c] IEEE publications are available from The Institute of Electrical and Electronics Engineers (http://shop.ieee.org/).
[d] The IEEE standards or products referred to in this introduction are trademarks of The Institute of Electrical and Electronics Engineers, Inc.
[e] NEMA publications are available from Global Engineering Documents (http://global.ihs.com/).


Copyright © 2014 IEEE. All rights reserved.

Authorized licensed use limited to: University of Waterloo. Downloaded on January 13,2016 at 09:00:48 UTC from IEEE Xplore. Restrictions apply.

## Contents

1. Overview ..... 1
1.1 Scope ..... 1
1.2 Purpose ..... 1

2. Normative references ..... 1

3. Definitions for acceptability and sampling ..... 2

4. Strand-eye anchor rods and nuts ..... 3
4.1 Anchor rods ..... 3
4.2 Nuts for anchor rods ..... 3
4.3 Threads ..... 5
4.4 Tests for strength ..... 6
4.5 Sizes ..... 6
4.6 Protective coating ..... 7

5. Crossarm braces ..... 7
5.1 Material ..... 7
5.2 Dimensions ..... 7
5.3 Strength ..... 8
5.4 Protective coating ..... 9

6. Guy attachments, wrap and formed guy hooks, guy strain plates, guy clamps, and pole eye plates ..... 9
6.1 Material ..... 9
6.2 Guy clamp bolts strength ..... 9
6.3 Dimensions ..... 9
6.4 Protective coating ..... 9

7. Bolt-type and pole-top insulator pins with lead or nylon alloy threads ..... 18
7.1 Material ..... 18
7.2 Dimensions ..... 19
7.3 Threads ..... 19
7.4 Strength ..... 19

8. Pole guards ..... 25
8.1 Material ..... 25
8.2 Dimensions ..... 25
8.3 Protective coating ..... 25

9. Crossarm gains ..... 25
9.1 Material ..... 25
9.2 Dimensions ..... 25
9.3 Protective coating ..... 25

10. Protective coatings ..... 30
10.1 Galvanizing ..... 30
10.2 Other coatings ..... 30

11. Marking ..... 30

12. Inspection requirements ..... 30


Copyright © 2014 IEEE. All rights reserved.

Authorized licensed use limited to: University of Waterloo. Downloaded on January 13,2016 at 09:00:48 UTC from IEEE Xplore. Restrictions apply.

13. Determination of acceptability ..... 30

Annex A (informative) Bibliography ..... 32


Copyright © 2014 IEEE. All rights reserved.

Authorized licensed use limited to: University of Waterloo. Downloaded on January 13,2016 at 09:00:48 UTC from IEEE Xplore. Restrictions apply.

# IEEE Standard for Pole Line Hardware for Overhead Line Construction

*IMPORTANT NOTICE: IEEE Standards documents are not intended to ensure safety, security, health, or environmental protection, or ensure against interference with or from other devices or networks. Implementers of IEEE Standards documents are responsible for determining and complying with all appropriate safety, security, environmental, health, and interference protection practices and all applicable laws and regulations.*

*This IEEE document is made available for use subject to important notices and legal disclaimers. These notices and disclaimers appear in all publications containing this document and may be found under the heading "Important Notice" or "Important Notices and Disclaimers Concerning IEEE Documents." They can also be obtained on request from IEEE or viewed at http://standards.ieee.org/IPR/disclaimers.html.*

## 1. Overview

### 1.1 Scope

This standard covers the requirements of inch-based hardware commonly used in wood pole overhead line construction. Metric hardware is not covered by this standard.

### 1.2 Purpose

This standard will combine several existing IEEE, ANSI, and NEMA standards that are either current or archived. These standards provide the user and manufacturer with established manufacturing specifications. The current use of several standards requires work on each standard on a five-year cycle, which has resulted in some of these standards being archive. The combined standard will prove for a timely review process for the standard and will provide the industry with a current standard for widely used pole line hardware.

## 2. Normative references

The following referenced documents are indispensable for the application of this document (i.e., they must be understood and used; therefore, each referenced document is cited in text and its relationship to this document is explained). For dated references, only the edition cited applies. For undated references, the latest edition of the referenced document (including any amendments or corrigenda) applies.


Copyright © 2014 IEEE. All rights reserved.

Authorized licensed use limited to: University of Waterloo. Downloaded on January 13,2016 at 09:00:48 UTC from IEEE Xplore. Restrictions apply.

ANSI/ASME B18.2.2, American National Standard for Nuts for General Applications: Machine Screw Nuts, Square, Hex Flange, and Coupling Nuts (Inch Series).[1]

ASTM A123/A123M-13, Standard Specification for Zinc (Hot-Dip Galvanized) Coatings on Iron and Steel Products.[2]

ASTM A153/A153M-09, Standard Specification for Zinc Coating (Hot-Dip) on Iron and Steel Hardware.

ASTM A197-00(2011), Specification for Cupola Malleable Iron.

IEEE Std C135.80™, IEEE Standard for Fasteners for Overhead Line Construction.[3,4]

## 3. Definitions for acceptability and sampling

**acceptance quality limit (AQL):** The maximum percent defective (maximum number of defects per 100 units) that, for a sampling inspection, can be considered satisfactory as a process average.

**average test value ( $\overline{X}n$ ):**

$$\overline{X}n = (X_1 + X_2 + X_3 + ... + X_n)/n$$

where

$X_1, X_2, ..., X_n$ are individual test values
$n$ is the total number of units tested

**defect:** Any nonconformance with specified requirements of the tested unit of product. For this standard, a defect is defined as a unit of product that, when tested, falls below its specified rated ultimate strength.

**lot:** A quantity of line fasteners selected and agreed upon by the manufacturer and customer as being representative of a homogeneous population. Each lot, as far as is practicable, shall consist of units of product of a single type, grade, class, size, and composition that are manufactured at essentially the same time and under essentially the same conditions. Consideration should be given to limit the lot size, where applicable, to each heat-treating and/or annealing process of a group of units. As necessary, the manufacturer shall provide adequate and suitable storage space for each lot and means for proper identification. Any lot shall not exceed 35 000 units.

**major defect:** A unit of product that, when tested, falls below 85% of its specified rated ultimate strength.

**sample:** One or more units of product drawn from a lot using random selection without regard to unit quality.

**sample size:** The number of units of product based on the lot size. Minimum sample sizes are given in Table 1.

[1] ANSI publications are available from the American National Standards Institute (http://www.ansi.org).
[2] ASTM publications are available from the American Society for Testing and Materials (http://www.astm.org/).
[3] IEEE publications are available from The Institute of Electrical and Electronics Engineers (http://shop.ieee.org/).
[4] The IEEE standards or products referred to in this clause are trademarks of The Institute of Electrical and Electronics Engineers, Inc.


Copyright © 2014 IEEE. All rights reserved.

Authorized licensed use limited to: University of Waterloo. Downloaded on January 13,2016 at 09:00:48 UTC from IEEE Xplore. Restrictions apply.

**Table 1—Minimum sample size**

| Lot size | Sample size |
|---|---|
| 1 to 15 | 2 |
| 16 to 50 | 3 |
| 51 to 150 | 5 |
| 151 to 500 | 8 |
| 501 to 3200 | 13 |
| 3201 to 35 000 | 20 |

# 4. Strand-eye anchor rods and nuts

## 4.1 Anchor rods

All anchor rods shall be made of hot-rolled steel produced by the open-hearth, basic-oxygen, or electric-furnace process and shall be of a grade and quality to meet the requirements of this standard.

### 4.1.1 Dimensions

All dimensions before zinc coating shall be in accordance with Figure 1.

## 4.2 Nuts for anchor rods

All anchor rods shall be furnished with one square nut per rod unless otherwise specified. The nuts shall be assembled on the rods; suitable means shall be provided for preventing loss in transit. The nuts shall be of the heavy-duty square type and shall meet the requirements of ANSI/ASME B18.2.2.[5] Dimensions for nuts, before zinc coating, shall be in accordance with Table 2.

The maximum width across flats applies at all points. No transverse section through the nut between 25% and 75% of the nut thickness, as measured from the bearing face, shall be less than the minimum width across flats.

The tops of nuts shall be flat and chamfered or washer crowned. The diameter of the chamfer circle shall be equal to the maximum width across flats within a tolerance of –15%.

The bearing surface shall be at right angles to the axis of the threaded hole within a tolerance of 3°.

The axis of the tapped hole shall be concentric with the axis of the nut body within a tolerance equal to 5% (10% full indicator reading (FIR)) of the maximum width across the flats.

[5] Information on normative references can be found in Clause 2.


Copyright © 2014 IEEE. All rights reserved.

Authorized licensed use limited to: University of Waterloo. Downloaded on January 13,2016 at 09:00:48 UTC from IEEE Xplore. Restrictions apply.

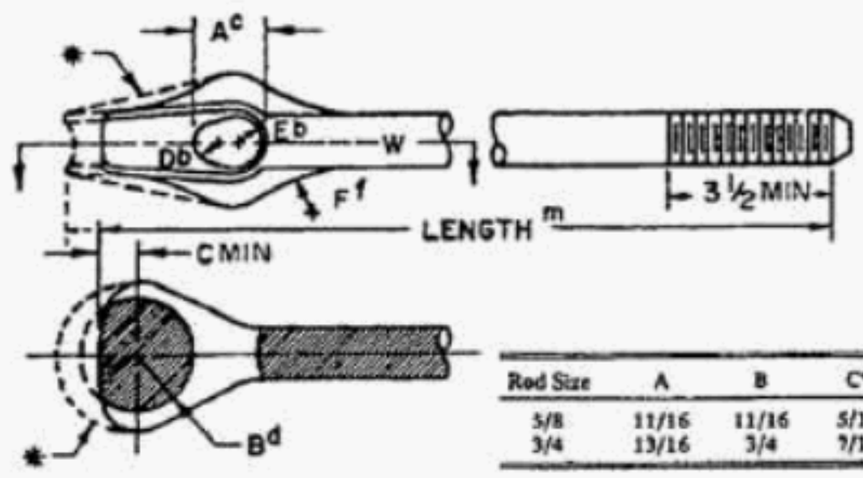


| Rod Size | A | B | C* | D | E | F |
|---|---|---|---|---|---|---|
| 5/8 | 11/16 | 11/16 | 5/16 | 1/4 | 9/32 | 5/8 |
| 3/4 | 13/16 | 3/4 | 7/16 | 9/32 | 11/32 | 3/4 |

Single Strand-Eye Anchor Rod

(a)

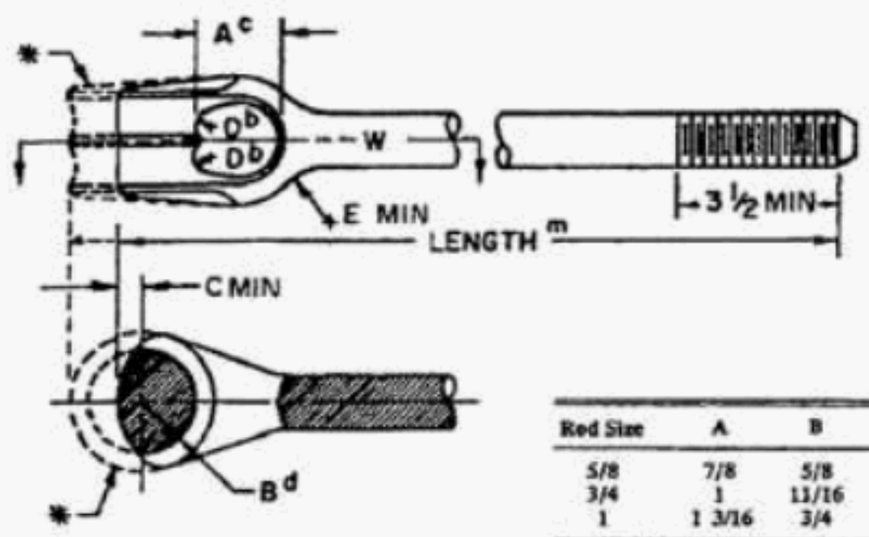


| Rod Size | A | B | C* | D | E(Min) |
|---|---|---|---|---|---|
| 5/8 | 7/8 | 5/8 | 1/8 | 7/32 | 3/8 |
| 3/4 | 1 | 11/16 | 5/32 | 1/4 | 1/2 |
| 1 | 1 3/16 | 3/4 | 3/16 | 5/16 | 3/4 |

Double Strand-Eye Anchor Rod

(b)

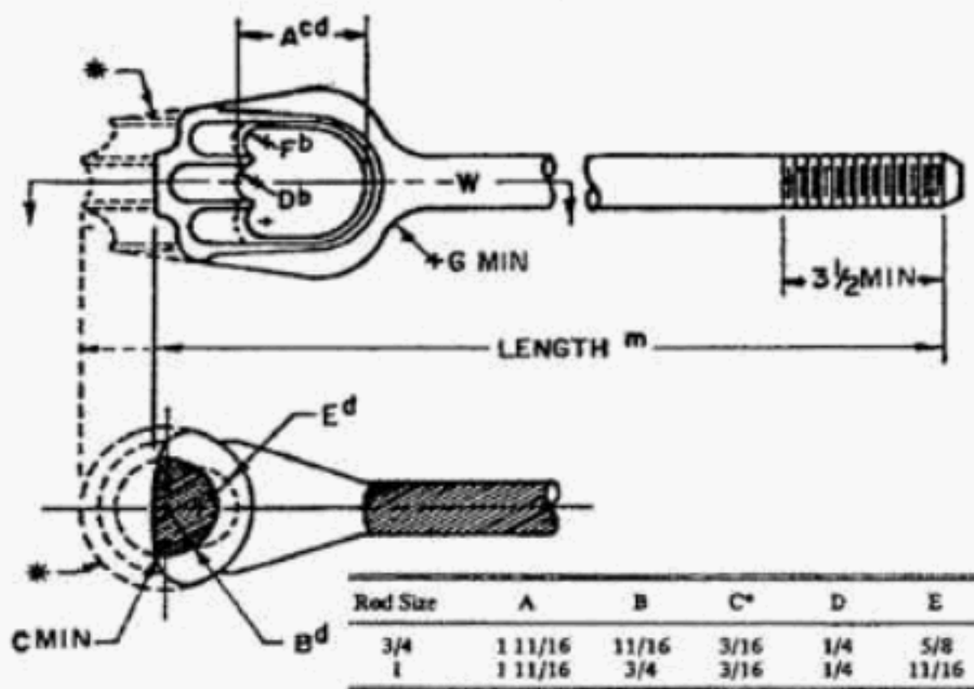


| Rod Size | A | B | C* | D | E | F | G |
|---|---|---|---|---|---|---|---|
| 3/4 | 1 11/16 | 11/16 | 3/16 | 1/4 | 5/8 | 7/32 | 3/4 |
| 1 | 1 11/16 | 3/4 | 3/16 | 1/4 | 11/16 | 1/4 | 1 |

Triple Strand-Eye Anchor Rod

(c)

*Full circle dimension is optional and when used, dimension C should be disregarded.

NOTES: W = Manufacturer's identification,
ALLOWABLE VARIATIONS: a = 1/64, b = 1/32, c = 1/16, d = 1/8, e = 3/16, f = 1/4, g = 3/8, h = 1/2, j = 3/4, k = 1, m = 3, x = 0
A single-letter superscript indicates that the plus and minus value are the same, for example:
$D^b$ = 1/4 ± 1/32 for 5/8-inch single strand-eye anchor rods.
A double-letter superscript indicates that the plus value is that of the first letter and the minus value is that of the second letter, for example:
$A^{cd}$ = 1 11/16, + 1/16, − 1/8 inch for 3/4-inch triple strand-eye anchor rods.

**Figure 1—Dimensions for single, double, and triple strand-eye anchor rods (in inches)**


Copyright © 2014 IEEE. All rights reserved.

Authorized licensed use limited to: University of Waterloo. Downloaded on January 13,2016 at 09:00:48 UTC from IEEE Xplore. Restrictions apply.

**Table 2—Dimensions of heavy-duty square nuts (in inches)**

| Nominal bolt size | Width across flats | | | Width across corners | | Thickness | | |
|---|---|---|---|---|---|---|---|---|
| | Basic | Max | Min | Max | Min | Basic | Max | Min |
| 5/8 | 1-1/16 | 1.0625 | 1.031 | 1.503 | 1.386 | 5/8 | 0.647 | 0.587 |
| 3/4 | 1-1/4 | 1.2500 | 1.212 | 1.768 | 1.635 | 3/4 | 0.771 | 0.710 |
| 1 | 1-5/8 | 1.6250 | 1.575 | 2.298 | 2.132 | 1 | 1.028 | 0.956 |

## 4.3 Threads

### 4.3.1 Anchor rod threads

Anchor rod threads shall, before zinc-coating, be concentric with the axis of the rod and shall be machine rolled or cut in accordance with the dimensions given in Table 3.

**Table 3—Dimensions of anchor rod threads (in inches)**

| Nominal rod size | Rolled or cut | Series and class | Rod diameter | | Major diameter | | Pitch diameter | |
|---|---|---|---|---|---|---|---|---|
| | | | Max | Min | Max | Min | Max | Min |
| 5/8 | R | 11-UNS-2A | 0.616 | 0.602 | 0.6718 | 0.6536 | 0.6113 | 0.6058 |
| 3/4 | R | 10-UNS-2A | 0.742 | 0.726 | 0.8034 | 0.7841 | 0.7364 | 0.7305 |
| 1 | R | 8-UNC-2A | 1.009 | 0.975 | 0.9980 | 0.9755 | 0.9168 | 0.9100 |

### 4.3.2 Nut threads

After zinc coating, anchor rod nut threads shall be tapped oversize in accordance with the dimensions given in Table 4.

**Table 4—Dimensions of anchor rod nut threads (in inches)**

| Nominal rod size | Number of threads per inch | Internal threads | | | | | Nominal tap size outside diameter |
|---|---|---|---|---|---|---|---|
| | | Pitch diameter | | Minor diameter | | Major diameter | |
| | | Min | Max | Min | Max | Min | |
| 5/8 | 11 | 0.6354 | 0.6426 | 0.5964 | 0.6154 | 0.6944 | 0.695-11 |
| 3/4 | 10 | 0.7613 | 0.7690 | 0.7183 | 0.7393 | 0.8263 | 0.826-10 |
| 1 | 8 | 0.9398 | 0.9486 | 0.8860 | 0.9110 | 1.0210 | 1.024-8 |


Copyright © 2014 IEEE. All rights reserved.

Authorized licensed use limited to: University of Waterloo. Downloaded on January 13,2016 at 09:00:48 UTC from IEEE Xplore. Restrictions apply.

## 4.4 Tests for strength

### 4.4.1 Tensile load test

Any assembled anchor rod, when tested by restraining the nut and applying a load by a suitable means through the eye of the rod, shall withstand the tensile loads shown in Table 5.

**Table 5—Tensile loads for assembled anchor rods**

| Nominal rod size | Minimum load (lb) |
|---|---|
| 5/8 | 16 000 |
| 3/4 | 23 000 |
| 1 | 36 000 |

If failure occurs, it shall occur only in the shank or the threaded section of the anchor rod.

If desired, this test may be made in two steps:

*Step 1:* Apply a tensile load to the unthreaded portion of the rod and to a bar passing through the eye of the rod.

*Step 2:* Apply a tensile load to the unthreaded portion of the rod while restraining the nut.

In step 2, at least three full threads of the threaded rods shall extend beyond the face of the nut.

### 4.4.2 Bend test

It shall be possible, while the assembled anchor rod is at room temperature (10–32 °C (50–90 °F)) to bend any point of the unthreaded portion of the rod through an angle of 90°, about a mandrel equal to the diameter of the anchor rod, without fracture of the steel. Spalling or cracking of the zinc coating in this test shall not be deemed failure to meet the requirement.

## 4.5 Sizes

Anchor-rod sizes and lengths shall be as given in Table 6.

**Table 6—Nominal anchor rod sizes**

| Nominal rod size (in) | Length (ft) | | |
|---|---|---|---|
| | Single strand-eye | Double strand-eye | Triple strand-eye |
| 5/8 | 6, 7, 8 | 6, 7, 8 | — |
| 3/4 | 8 | 7, 8, 9 | 7, 8, 9 |
| 1 | — | 10 | 8, 10 |


Copyright © 2014 IEEE. All rights reserved.

Authorized licensed use limited to: University of Waterloo. Downloaded on January 13,2016 at 09:00:48 UTC from IEEE Xplore. Restrictions apply.

### 4.6 Protective coating

Protective coating shall be in accordance with Clause 10.

## 5. Crossarm braces

### 5.1 Material

All steel crossarm braces shall be made from hot-rolled steel or cold-rolled steel that has been produced by the open-hearth, basic-oxygen, or electric-furnace process that is of a grade and quality suitable to meet the requirements of this standard.

### 5.2 Dimensions

All dimensions are in inches prior to zinc coating. Dimensions shall conform to those shown in Figure 2 and Figure 3.

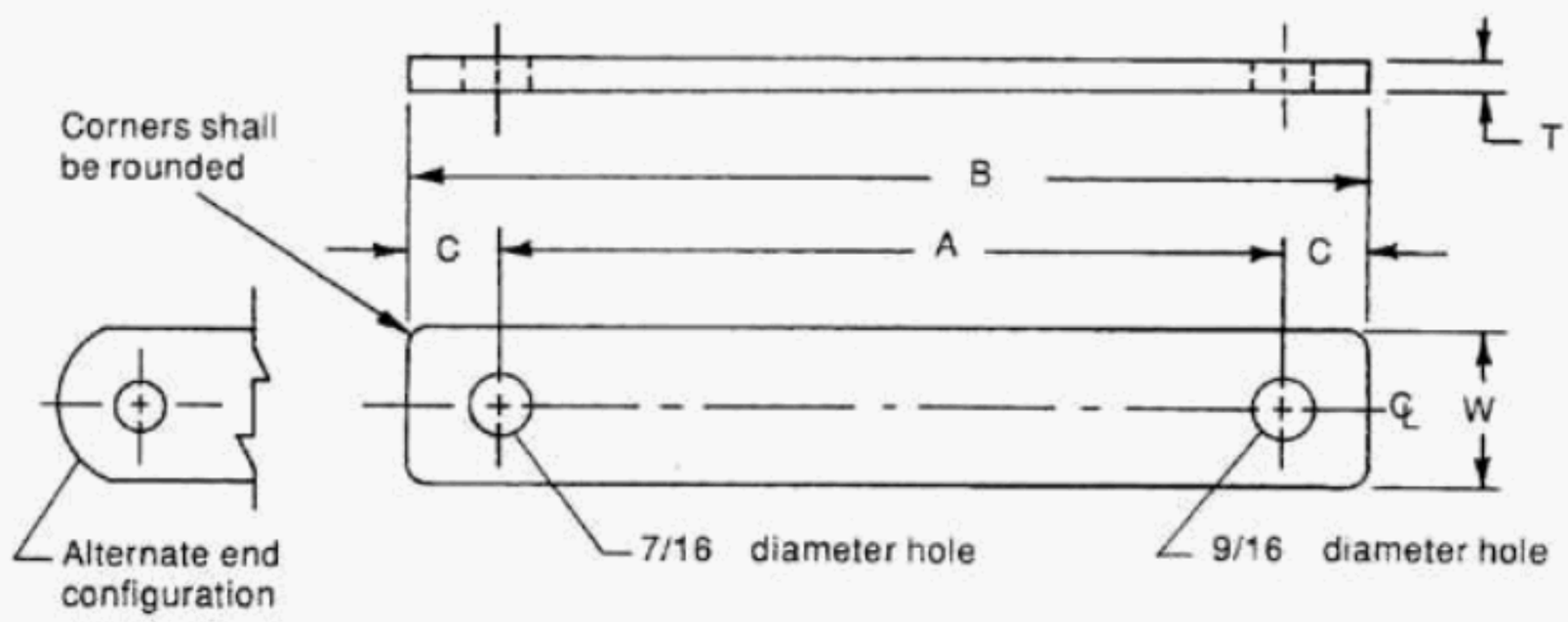


| Brace length and thickness | A | | B | | C | | T | | W | |
|---|---|---|---|---|---|---|---|---|---|---|
| | Max | Min | Max | Min | Max | Min | Max | Min | Max | Min |
| 28 × 1/4 | 26-1/8 | 25-7/8 | 28-1/8 | 27-7/8 | 1-1/16 | 15/16 | 17/64 | 15/64 | 1-17/64 | 1-15/64 |
| 30 × 1/4 | 28-1/8 | 27-7/8 | 30-1/8 | 29-7/8 | 1-1/16 | 15/16 | 17/64 | 15/64 | 1-17/64 | 1-15/64 |
| 32 × 1/4 | 30-1/8 | 29-7/8 | 32-1/8 | 31-7/8 | 1-1/16 | 15/16 | 17/64 | 15/64 | 1-17/64 | 1-15/64 |

| Hole diameter | Max dia. | Min dia. |
|---|---|---|
| 7/16 | 1/2 | 7/16 |
| 9/16 | 5/8 | 9/16 |

**Figure 2—Dimensions for flat crossarm braces (in inches)**


Copyright © 2014 IEEE. All rights reserved.

Authorized licensed use limited to: University of Waterloo. Downloaded on January 13,2016 at 09:00:48 UTC from IEEE Xplore. Restrictions apply.

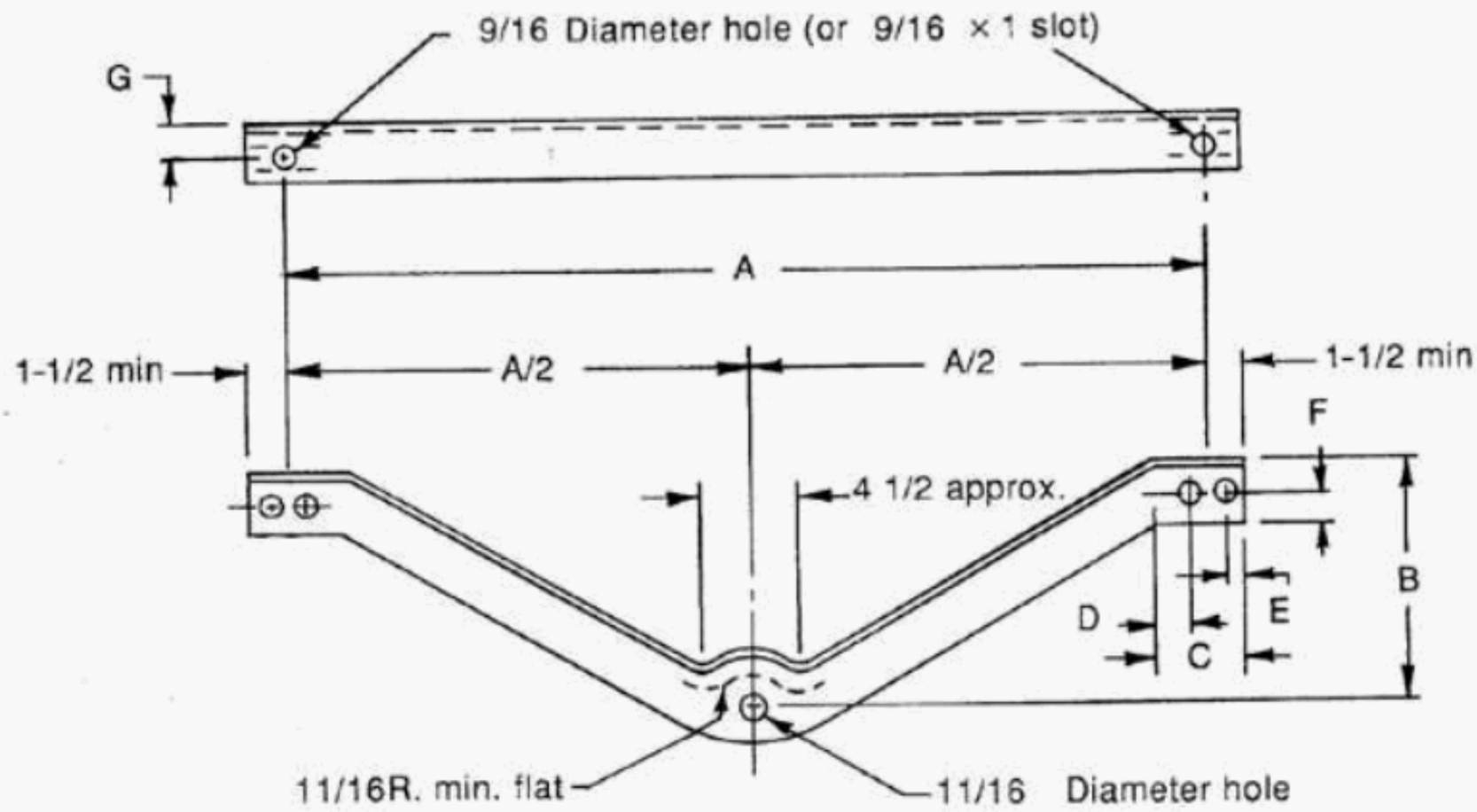


| Angle size | A | | B | | C | |
|---|---|---|---|---|---|---|
| | Max | Min | Max | Min | Max | Min |
| 1.5 × 1.5 × 3/16 | 42.25 | 41.75 | 12.25 | 11.75 | 4.5 | 3.5 |
| 1.5 × 1.5 × 3/16 | 48.25 | 47.75 | 14.25 | 13.75 | 4.5 | 3.5 |
| 1.5 × 1.5 × 3/16 | 48.25 | 47.75 | 18.25 | 17.75 | 4.5 | 3.5 |
| 1.75 × 1.75 × 3/16 | 60.25 | 59.75 | 18 | 18 | 4.5 | 3.5 |
| 1.75 × 1.75 × 3/16 | 60.25 | 59.75 | 18 | 18 | 4.5 | 3.5 |

| Hole diameter | Max dia. | Min dia. |
|---|---|---|
| 7/16 | 1/2 | 7/16 |
| 9/16 | 5/8 | 9/16 |
| 11/16 | 3/4 | 11/16 |

**Figure 3—Dimensions for angle crossarm braces (in inches)**

## 5.3 Strength

Flat crossarm braces (Figure 2) shall have a minimum tensile strength of 7000 lb at the bolt holes.

The load shall be applied at a rate of approximately 0.4 in/min free running crosshead speed of the testing machine.

Flat crossarm braces shall be capable of being bent 10° at bolt holes and 140° at any point between holes without cracking of the base metal on the outside of the bent portion. A 9/16-in diameter mandrel shall be used for bending. The brace shall be clamped firmly so the radius of the bend will be the same as that of the mandrel.


Copyright © 2014 IEEE. All rights reserved.

Authorized licensed use limited to: University of Waterloo. Downloaded on January 13,2016 at 09:00:48 UTC from IEEE Xplore. Restrictions apply.

### 5.4 Protective coating

Protective coating shall be in accordance with Clause 10.

## 6. Guy attachments, wrap and formed guy hooks, guy strain plates, guy clamps, and pole eye plates

### 6.1 Material

Ferrous guy attachments shall be made from one of the following materials:

— Steel wrap and formed guy hooks, guy clamps, and guy strain plates shall be made from hot-rolled steel, which has been produced by the open-hearth, basic-oxygen, or electric-furnace process, and shall be of grades and qualities suitable to meet the requirements of applicable standards. See Figure 7 and Figure 8.

— Malleable-type ferrous guy attachments and pole eye plates shall be made from a grade specified in ASTM specifications for cupola malleable iron (i.e., ASTM A197-00(2011) or equivalent). See Figure 4, Figure 5, and Figure 9.

— Ductile-type ferrous guy attachments and pole eye plates shall be made from a grade specified in ASTM specifications for ductile iron castings (i.e., ASTM A536 [B8] or equivalent). See Figure 4, Figure 5, and Figure 9.

— Guy clamp bolts shall be made of suitable quality, hot-rolled, open-hearth, or electric-furnace steel to meet the strength requirements specified in this standard. If cold-headed, bolts shall be properly stress relieved. See Figure 10 and Figure 11.

### 6.2 Guy clamp bolts strength

Bolt heads, nuts, and threads shall be of sufficient strength to develop strength of no less than the minimums shown in Table 7.

**Table 7—Minimum strength by bolt size**

| Bolt size | Minimum strength (lb) |
|---|---|
| 1/2"–13 | 11 400 |
| 5/8"–11 | 18 000 |

### 6.3 Dimensions

All dimensions before galvanizing shall be in accordance with Figure 4 through Figure 11.

### 6.4 Protective coating

Protective coating shall be in accordance with Clause 10.


Copyright © 2014 IEEE. All rights reserved.

Authorized licensed use limited to: University of Waterloo. Downloaded on January 13,2016 at 09:00:48 UTC from IEEE Xplore. Restrictions apply.

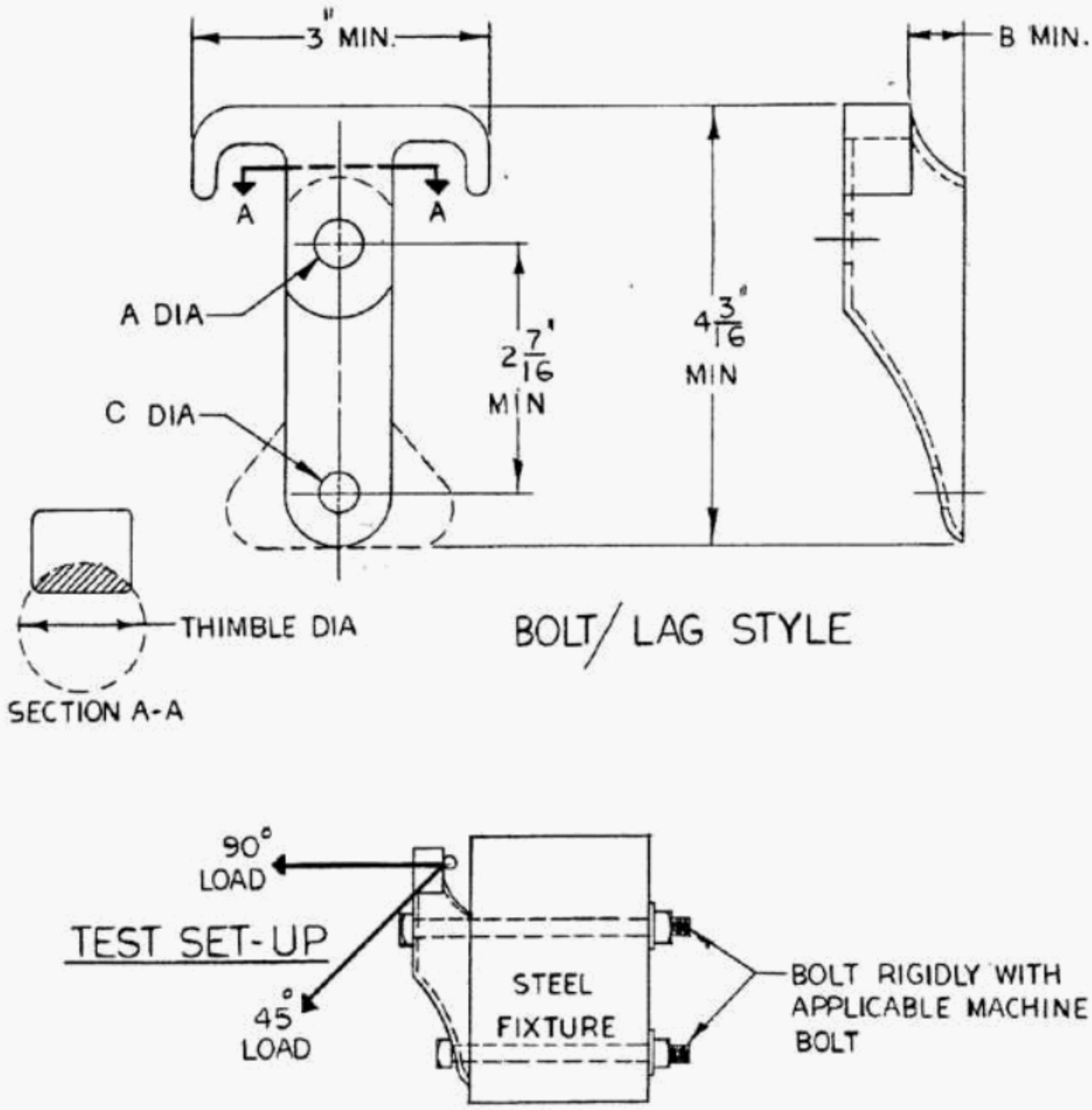


| Max strand size | Thimble diameter | | | A | | | B | C | | | Min strength (lb) 45° or 90° loads |
|---|---|---|---|---|---|---|---|---|---|---|---|
| | Size | Max | Min | Size | Max | Min | Min | Size | Max | Min | |
| 7/16 | 1-3/8 | 1-7/8 | 1-3/8 | 11/16 | 3/4 | 11/16 | 9/16 | 9/16 | 5/8 | 9/16 | 12 400 |
| 1/2 | 1-3/8 | 1-7/8 | 1-3/8 | 13/16 | 7/8 | 13/16 | 9/16 | 9/16 | 5/8 | 9/16 | 18 350 |
| 3/4 | 2-1/2 | 3 | 2-1/2 | 15/16 | 1 | 15/16 | 1-1/8 | 9/16 | 5/8 | 9/16 | 25 400 |
| 3/4 | 2-1/2 | 3 | 2-1/2 | 1-1/16 | 1-1/8 | 1-1/6 | 1-1/8 | 9/16 | 5/8 | 9/16 | 33 500 |

**Figure 4—Dimensions for T-hook (goat hook) guy attachment bolt lag style**


Copyright © 2014 IEEE. All rights reserved.

Authorized licensed use limited to: University of Waterloo. Downloaded on January 13,2016 at 09:00:48 UTC from IEEE Xplore. Restrictions apply.

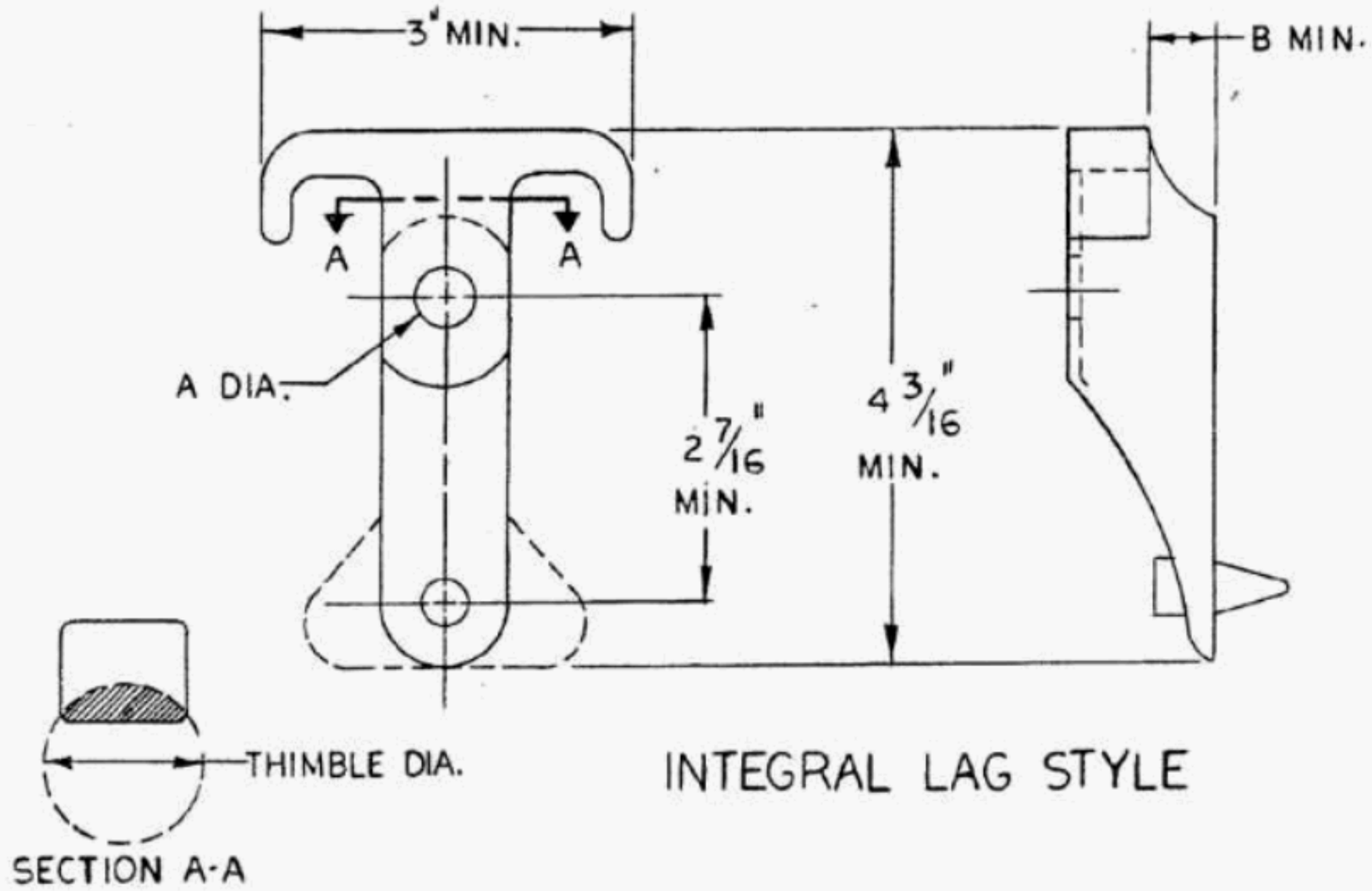


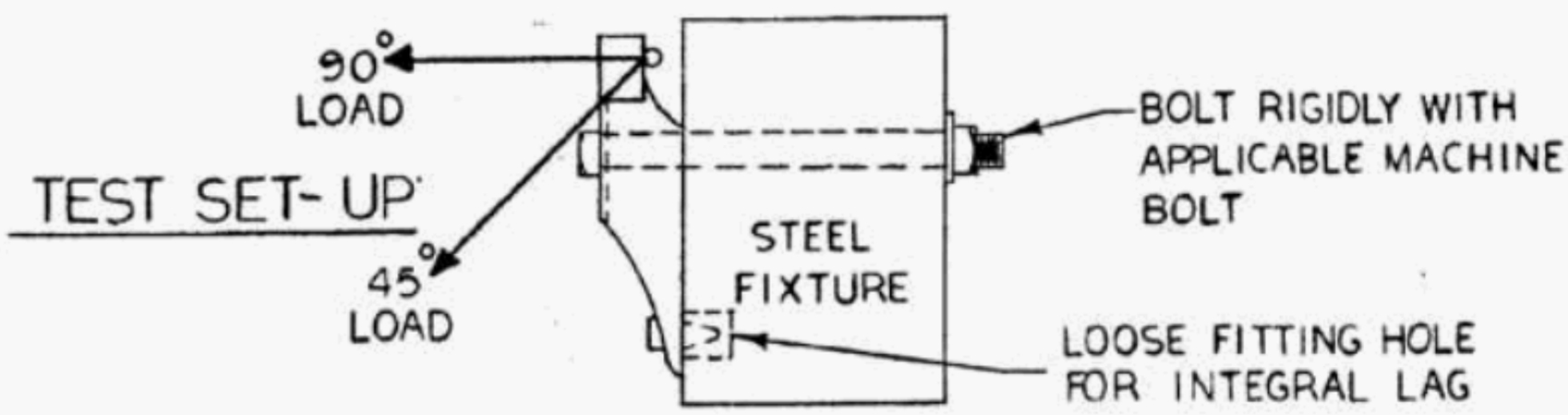


| Max strand size | Thimble diameter | | | A | | | B | Min strength (lb) 45° or 90° loads |
|---|---|---|---|---|---|---|---|---|
| | Size | Max | Min | Size | Max | Min | Min | |
| 7/16 | 1-3/8 | 1-7/8 | 1-3/8 | 11/16 | 3/4 | 11/16 | 9/16 | 12 400 |
| 1/2 | 1-3/8 | 1-7/8 | 1-3/8 | 13/16 | 7/8 | 13/16 | 9/16 | 18 350 |
| 3/4 | 2-1/2 | 3 | 2-1/2 | 15/16 | 1 | 15/16 | 1-1/8 | 25 400 |

**Figure 5—Dimensions for T-hook (goat hook) guy attachment integral lag style**


Copyright © 2014 IEEE. All rights reserved.

Authorized licensed use limited to: University of Waterloo. Downloaded on January 13,2016 at 09:00:48 UTC from IEEE Xplore. Restrictions apply.

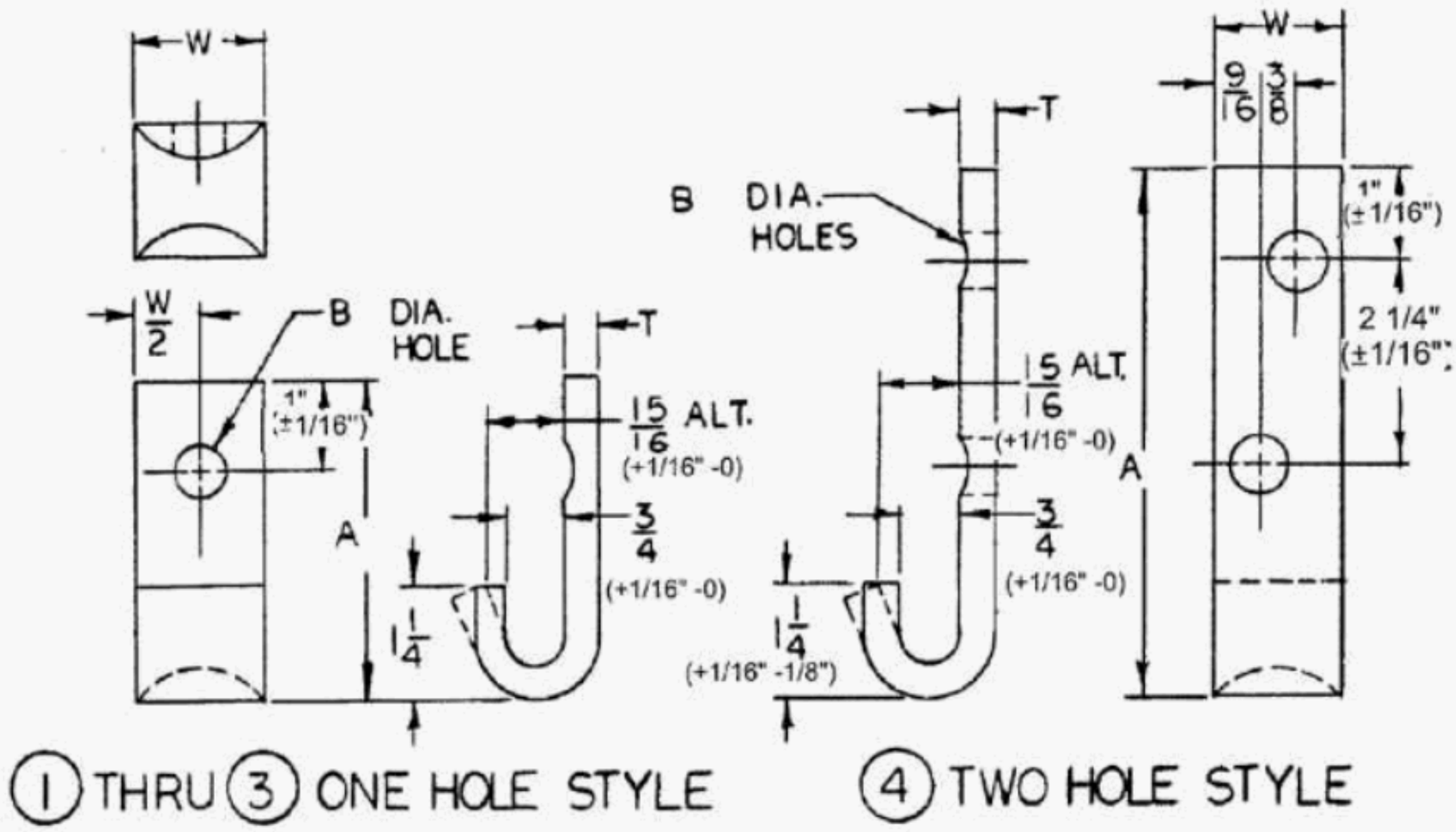


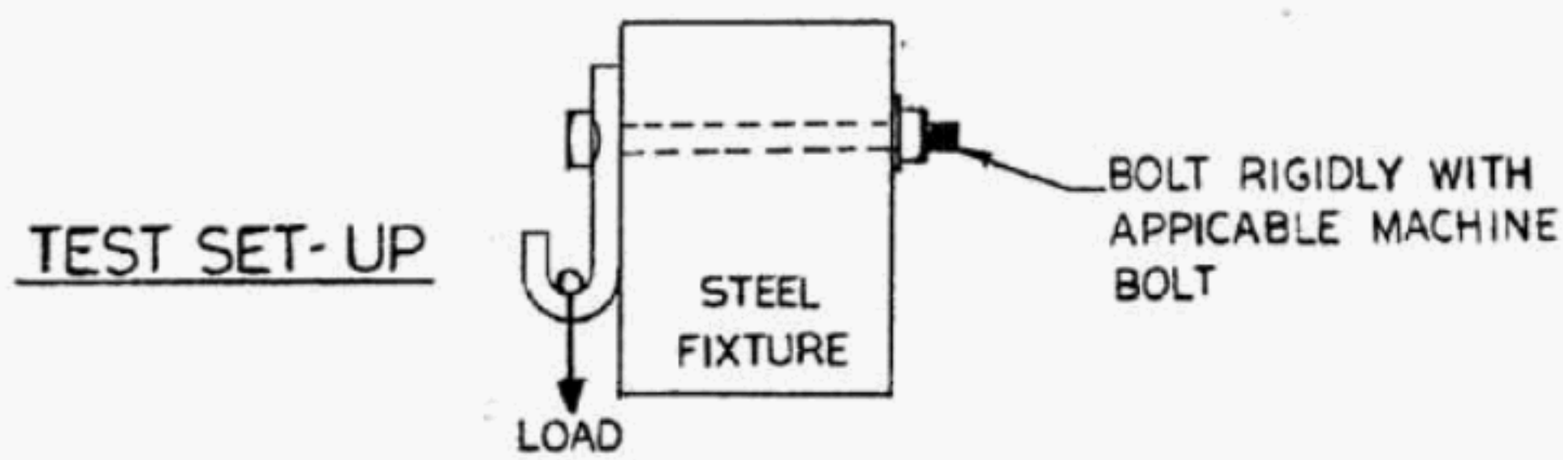


| Steel size T × W | T | | W | | A | | | B | | | Min strength (lb) |
|---|---|---|---|---|---|---|---|---|---|---|---|
| | Max | Min | Max | Min | Size | Max | Min | Size | Max | Min | |
| 3/8 × 1 3/4 | 1/2 | 11/32 | 1-13/16 | 1-11/16 | 4 | 4-1/4 | 3-7/8 | 11/16 | 3/4 | 11/16 | 7000 |

**Figure 6—Dimensions for wrap guy hooks**


Copyright © 2014 IEEE. All rights reserved.

Authorized licensed use limited to: University of Waterloo. Downloaded on January 13,2016 at 09:00:48 UTC from IEEE Xplore. Restrictions apply.

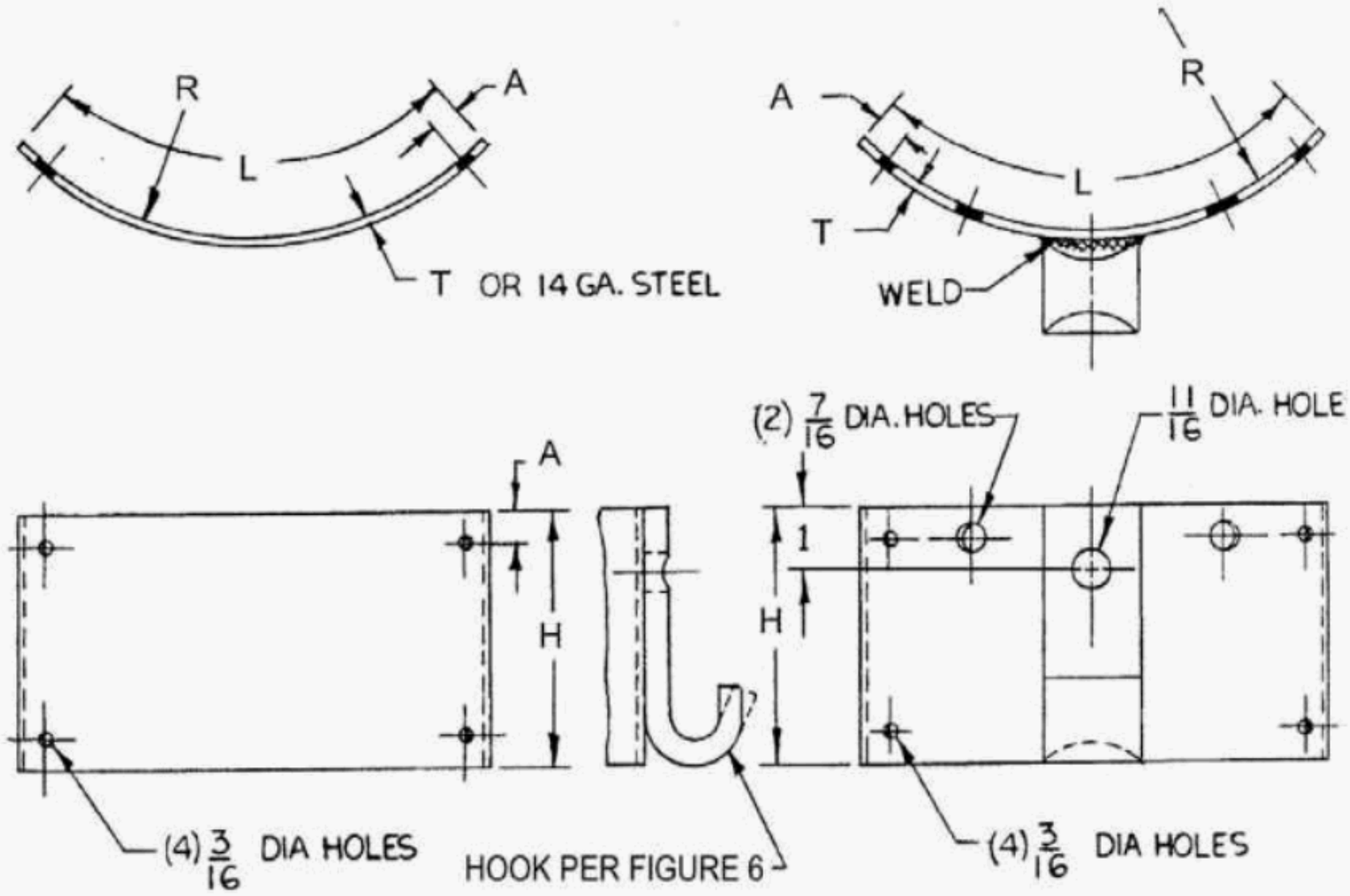


| A | | | R | | | L | | | H | | | T* | | |
|---|---|---|---|---|---|---|---|---|---|---|---|---|---|---|
| Basic | Max | Min | Basic | Max | Min | Basic | Max | Min | Basic | Max | Min | Basic | Max | Min |
| 1/2 | 9/16 | 7/16 | 5 | 5.5 | 4.5 | 8 | 8-1/8 | 7-7/8 | 4 | 4-1/8 | 3-7/8 | 5/64 | 1/16 | 3/32 |

* Thickness may be 14 gauge steel.

| Bolt hole | Max dia. | Min dia. |
|---|---|---|
| 5/8 | 3/4 | 11/16 |

**Figure 7—Dimensions for wrap guy strain plate**


Copyright © 2014 IEEE. All rights reserved.

Authorized licensed use limited to: University of Waterloo. Downloaded on January 13,2016 at 09:00:48 UTC from IEEE Xplore. Restrictions apply.

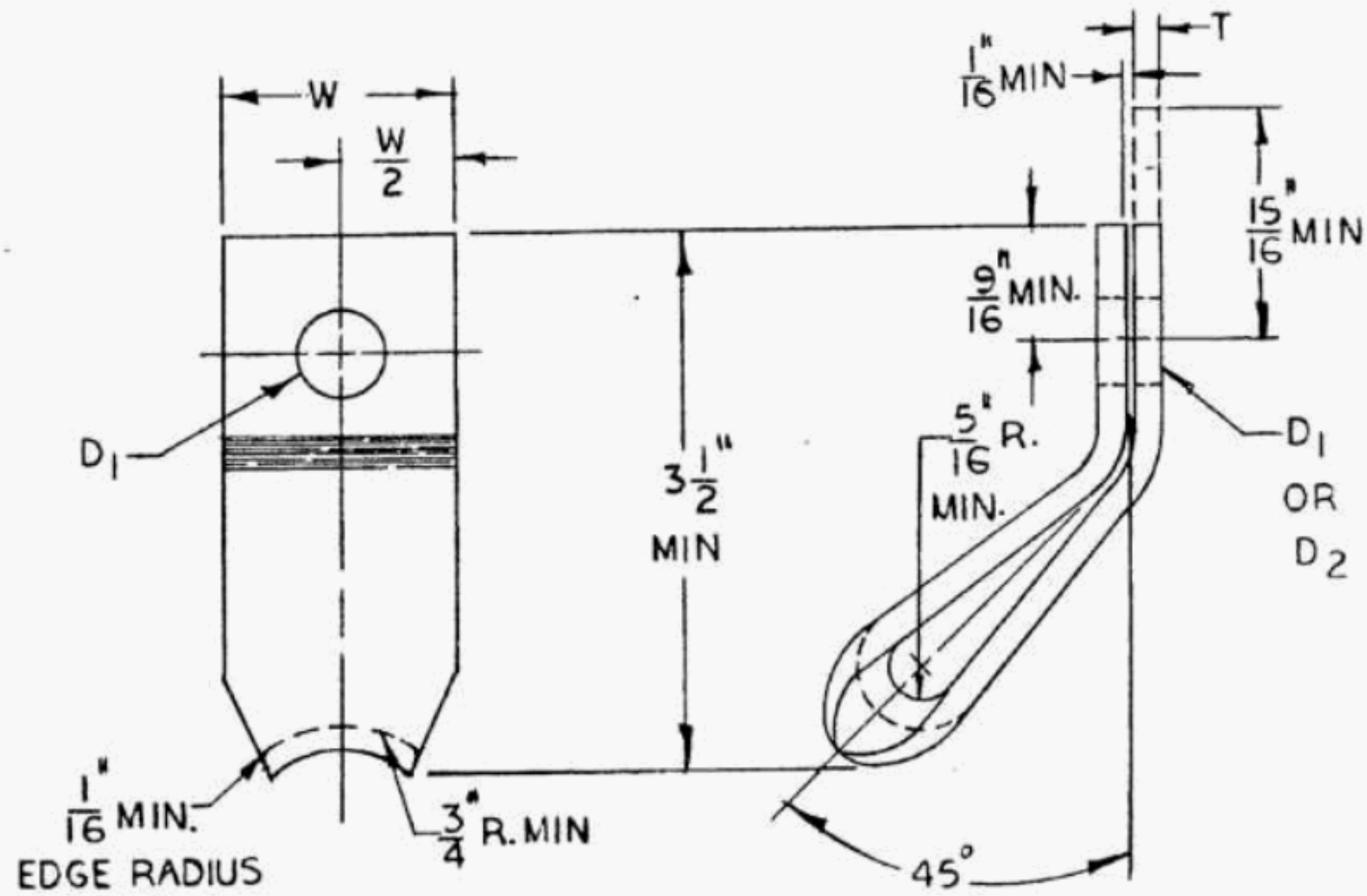


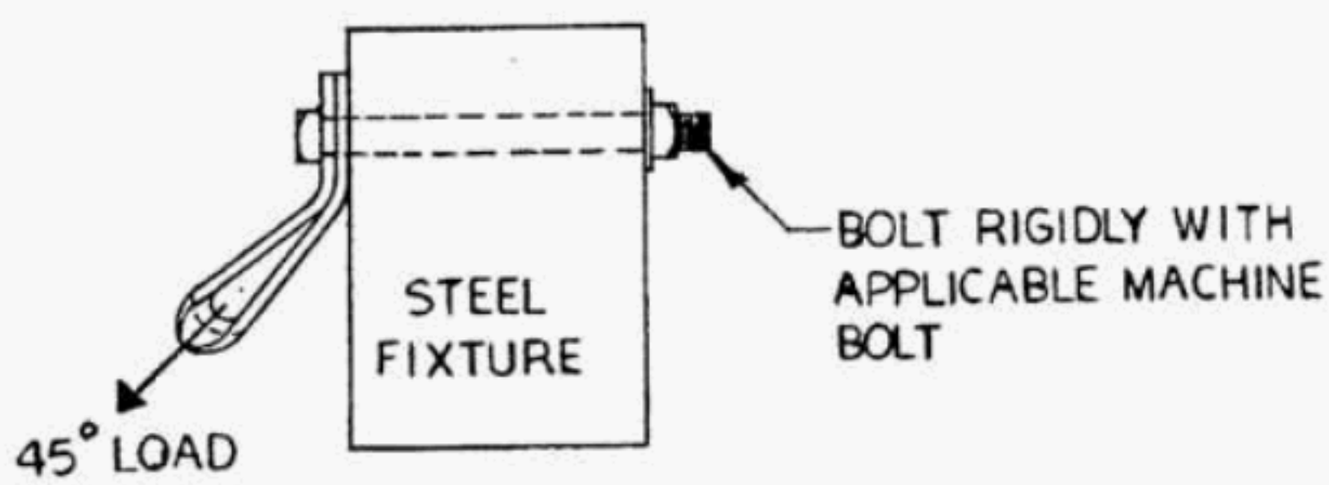


TEST SET-UP

| T × W | $D_1$ | | | $D_2$ | | | W | | | Min strength (lb) 45° loads |
|---|---|---|---|---|---|---|---|---|---|---|
| | Size | Max | Min | Size | Max | Min | Size | Max | Min | |
| 1/8 × 2 | 11/16 | 3/4 | 11/16 | 7/8 | 15/16 | 7/8 | 2 | 2-1/8 | 1-7/8 | 10 000 |
| 1/4 × 1-1/2 | 11/16 | 3/4 | 11/16 | 7/8 | 15/16 | 7/8 | 1.5 | 1-5/8 | 1-3/8 | 10 000 |
| 1/4 × 2 | 13/16 | 7/8 | 13/16 | 15/16 | 1 | 15/16 | 2 | 2-1/8 | 1-7/8 | 10 000 |
| 3/16 × 2 | 11/16 | 3/4 | 11/16 | — | — | — | 2 | 2-1/8 | 1-7/8 | 10 000 |

**Figure 8—Dimensions for formed guy hooks**


Copyright © 2014 IEEE. All rights reserved.

Authorized licensed use limited to: University of Waterloo. Downloaded on January 13,2016 at 09:00:48 UTC from IEEE Xplore. Restrictions apply.

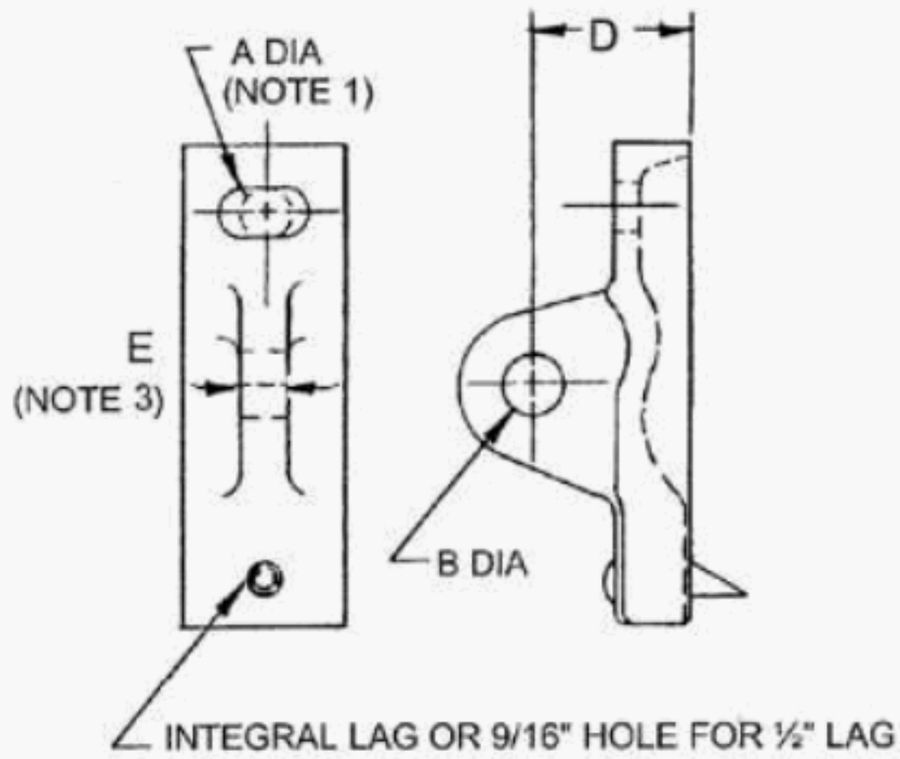


FIGURE 1

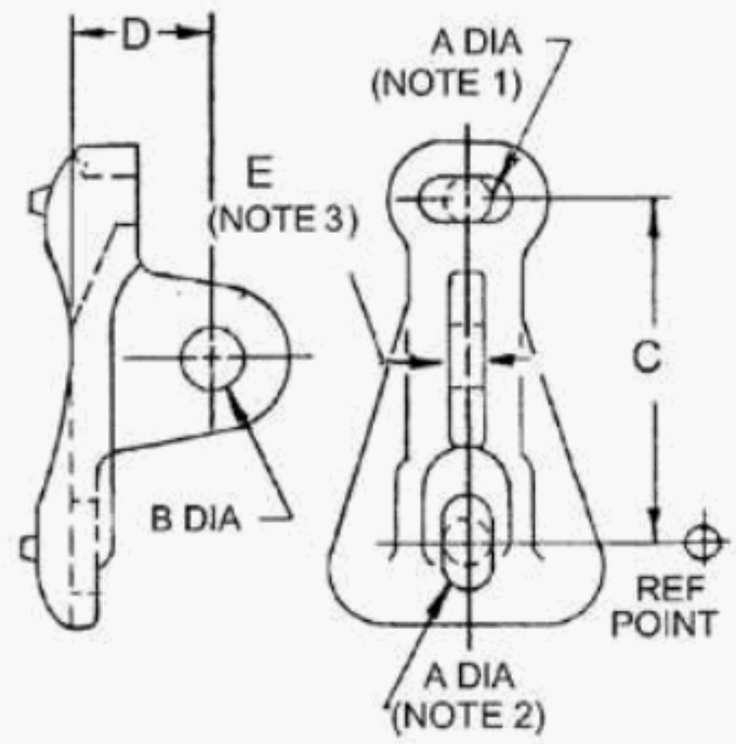


FIGURE 2

NOTES

1. HOLE MAY BE SINGLE HOLE OR SLOTTED.
2. HOLE MAY BE SINGLE, SCALLOPED OR SLOTTED, USER TO SPECIFY. SEE DETAIL A.
3 THICKNESS OF EYE AT CENTER OF HOLE B

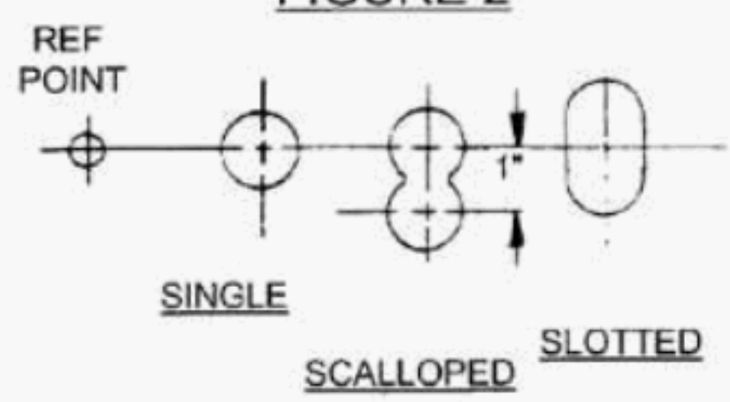


DETAIL A

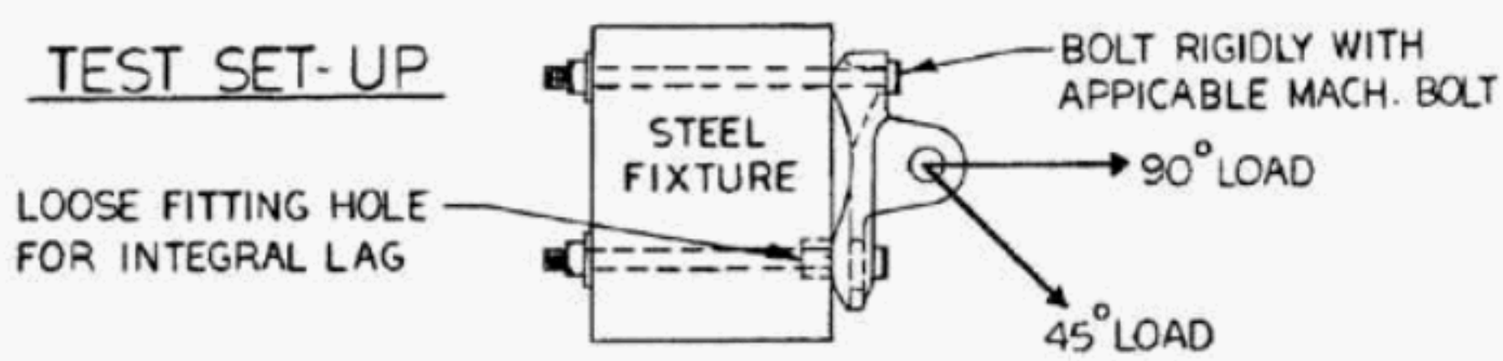


| Fig. | A | | | B | | | C | | | E | | | Minimum strength (lb) | |
|---|---|---|---|---|---|---|---|---|---|---|---|---|---|---|
| | Size | Max | Min | Size | Max | Min | Size | Max | Min | Size | Max | Min | 45° | 90° |
| 1 | 13/16 | 7/8 | 13/16 | 11/16 | 3/4 | 11/16 | — | — | — | 3/4 | 3/4 | 5/8 | 15 000 | — |
| 2 | 13/16 | 7/8 | 13/16 | 13/16 | 7/8 | 13/16 | 4 | 4-1/16 | 3-15/16 | 3/4 | 3/4 | 5/8 | 20 000 | 20 000 |
| 2 | 13/16 | 7/8 | 13/16 | 15/16 | 1 | 15/16 | 6 | 6-1/16 | 5-15/16 | 13/16 | 13/16 | 11/16 | 36 000 | 30 000 |
| 2 | 15/16 | 1 | 15/16 | 15/16 | 1 | 15/16 | 6 | 6-1/16 | 5-15/16 | 13/16 | 13/16 | 11/16 | 36 000 | 30 000 |
| 2 | 1-1/16 | 1-1/8 | 1-1/16 | 15/16 | 1 | 15/16 | 6 | 6-1/16 | 5-15/16 | 13/16 | 13/16 | 11/16 | 36 000 | 30 000 |

**Figure 9—Dimensions for pole eye plates**


Copyright © 2014 IEEE. All rights reserved.

Authorized licensed use limited to: University of Waterloo. Downloaded on January 13,2016 at 09:00:48 UTC from IEEE Xplore. Restrictions apply.

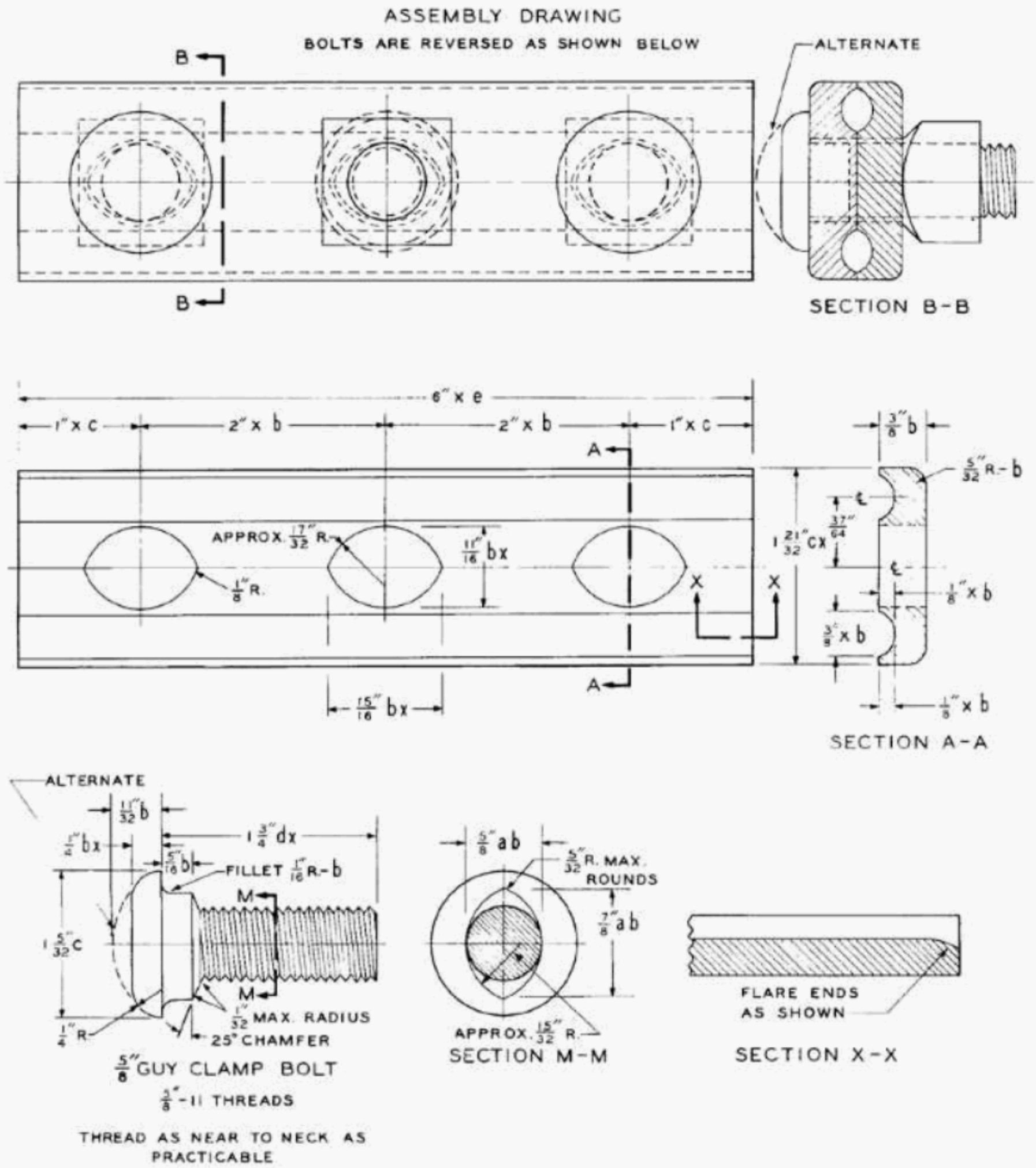


**Figure 10—Dimensions for heavy guy clamps**


Copyright © 2014 IEEE. All rights reserved.

Authorized licensed use limited to: University of Waterloo. Downloaded on January 13,2016 at 09:00:48 UTC from IEEE Xplore. Restrictions apply.

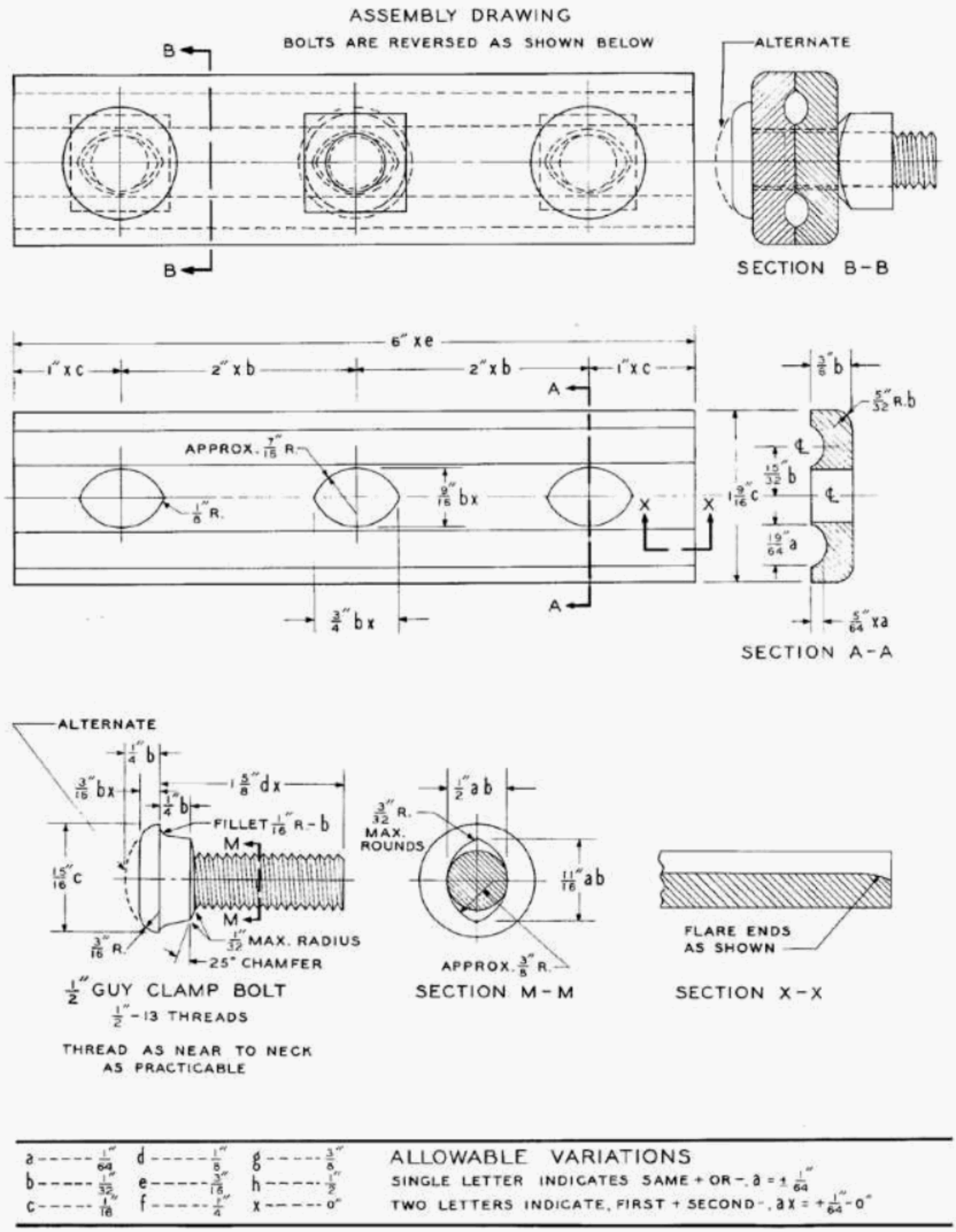


**Figure 11—Dimensions for medium guy clamps**


Copyright © 2014 IEEE. All rights reserved.

Authorized licensed use limited to: University of Waterloo. Downloaded on January 13,2016 at 09:00:48 UTC from IEEE Xplore. Restrictions apply.

# 7. Bolt-type and pole-top insulator pins with lead or nylon alloy threads

## 7.1 Material

### 7.1.1 Pins

Pins shall be made from the following material: hot-rolled steel that has been produced by the open-hearth, basic-oxygen, or electric-furnace process. This material shall be of a grade and quality suitable to meet the requirements of this standard.

### 7.1.2 Bolt ends

The bolt ends of insulator pins shall be in accordance with IEEE Std C135. 80, as applicable.

### 7.1.3 Nuts

Nuts shall be in accordance with IEEE Std C135.80, as applicable.

### 7.1.4 Lock washers

Lock washers shall be in accordance with ANSI B18.21.1 [B2].

### 7.1.5 Washers

Washers shall be in accordance with IEEE Std C135.80, as applicable.

### 7.1.6 Locknuts

Locknuts shall be of the double concave type unless another type is specified.

### 7.1.7 Lead threads

Lead threads shall be made of a lead alloy of a grade and quality suitable to meet the strength and performance requirements of this standard.

### 7.1.8 Nylon alloy threads

Nylon alloy threads shall be a grade and quality suitable to meet the strength and performance requirements of this standard.


Copyright © 2014 IEEE. All rights reserved.

Authorized licensed use limited to: University of Waterloo. Downloaded on January 13,2016 at 09:00:48 UTC from IEEE Xplore. Restrictions apply.

## 7.2 Dimensions

Dimensions for bolt-type pins shall be in accordance with Figure 12 and Figure 13. Dimensions for pole-top pins shall be in accordance with Figure 15.

## 7.3 Threads

### 7.3.1 Shank, nut, and lock threads

Shank, nut, and lock nut threads shall be in accordance with IEEE Std C135.80.

### 7.3.2 Dimensions

Dimension of the threads used with pin-type insulators shall be in accordance with Figure 14.

## 7.4 Strength

### 7.4.1 Cantilever test for ferrous and nylon alloy pins

Bolt-type pins shall be tested in accordance with the test procedures outlined in Figure 16 and include the following:

— The angle of deflection shall be measured as the rotation of the steel thimble in the plane defined by the axis of the thimble and the load.

— The load shall be applied at a point equal in height to the lever arm (pin height above arm), at a rate of approximately 0.4 in/min, through a steel thimble screwed to the thread.

Also, bolt-type pins shall develop the cantilever strengths given in Figure 12 and Figure 13.

Pole-top pins shall be tested in accordance with the test procedures outlined in Figure 15.


Copyright © 2014 IEEE. All rights reserved.

Authorized licensed use limited to: University of Waterloo. Downloaded on January 13,2016 at 09:00:48 UTC from IEEE Xplore. Restrictions apply.

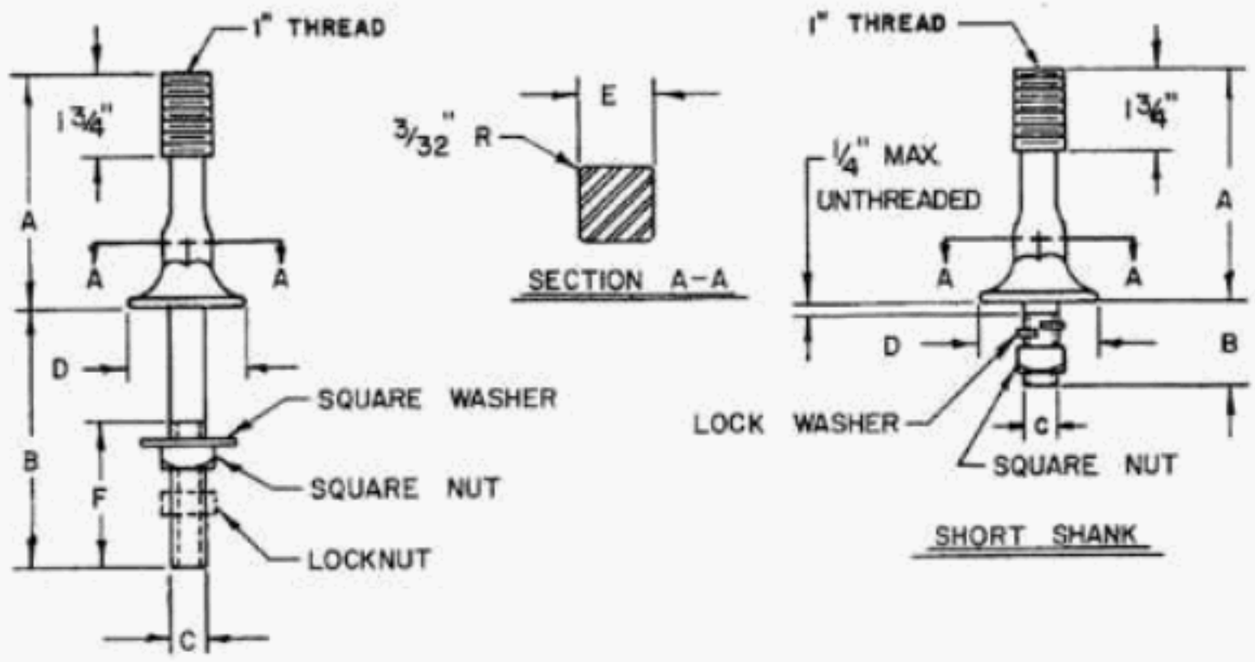


| Item no. | Dimensions of long shank pins for wood crossarms (in) | | | | | | | Min cantilever load at 10° deflection (lb) |
|---|---|---|---|---|---|---|---|---|
| | A | B | C | D | E | F | Square washer size | |
| | Height above arm | Length of shank | Nominal shank thread dia. | Dia. of base | Square size | Length of thread | | |
| 1 | 5 ± 1/8 | 5.5 ± 1/8 | 1/2 | 1-3/4 ± 1/8 | 5/8 ± 1/16 | 2-1/2 ± 1/8 | 2 × 2 × 1/8 | 500 |
| 2 | 5 ± 1/8 | 5.75 ± 1/8 | 5/8 | 2 ± 1/8 | 3/4 ± 1/16 | 2-3/4 ± 1/8 | 2 × 2 × 1/8 | 1000 |
| 3 | 5 ± 1/8 | 6.5 ± 1/8 | 5/8 | 2 ± 1/8 | 3/4 ± 1/16 | 3 ± 1/8 | 2 × 2 × 1/8 | 1000 |
| 4 | 5 ± 1/8 | 8 ± 1/8 | 5/8 | 2 ± 1/8 | 3/4 ± 1/16 | 3-1/4 ± 1/8 | 2 × 2 × 1/8 | 1000 |
| 5 | 6 ± 1/8 | 5.75 ± 1/8 | 5/8 | 2 ± 1/8 | 3/4 ± 1/16 | 2-3/4 ± 1/8 | 2 × 2 × 1/8 | 800 |
| 6 | 6 ± 1/8 | 6.5 ± 1/8 | 5/8 | 2 ± 1/8 | 3/4 ± 1/16 | 3 ± 1/8 | 2 × 2 × 1/8 | 800 |
| 7 | 6 ± 1/8 | 6.5 ± 1/8 | 3/4 | 2.5 ± 1/8 | 53/64 ± 1/16 | 3-1/4 ± 1/8 | 2-1/4 × 2-1/4 × 3/16 | 1400 |

| Item no. | Dimensions of short shank pins for steel crossarms (in) | | | | | Min cantilever load at 10° deflection (lb) |
|---|---|---|---|---|---|---|
| | A | B | C | D | E | |
| | Height above arm | Length of shank | Nominal shank thread dia. | Dia. of base | Square size | |
| 8 | 5 ± 1/8 | 1.25 ± 1/8 | 1/2 | 1.75 ± 1/8 | 5/8 ± 1/16 | 500 |
| 9 | 5 ± 1/8 | 1.5 ± 1/8 | 5/8 | 2 ± 1/8 | 3/4 ± 1/16 | 1000 |
| 10 | 6 ± 1/8 | 1.5 ± 1/8 | 5/8 | 2 ± 1/8 | 3/4 ± 1/16 | 800 |
| 11 | 6 ± 1/8 | 1.75 ± 1/8 | 3/4 | 2.5 ± 1/8 | 3/4 ± 1/16 | 1400 |

**Figure 12—Bolt-type insulator pins with 1-in diameter lead or nylon alloy threads**


Copyright © 2014 IEEE. All rights reserved.

Authorized licensed use limited to: University of Waterloo. Downloaded on January 13,2016 at 09:00:48 UTC from IEEE Xplore. Restrictions apply.

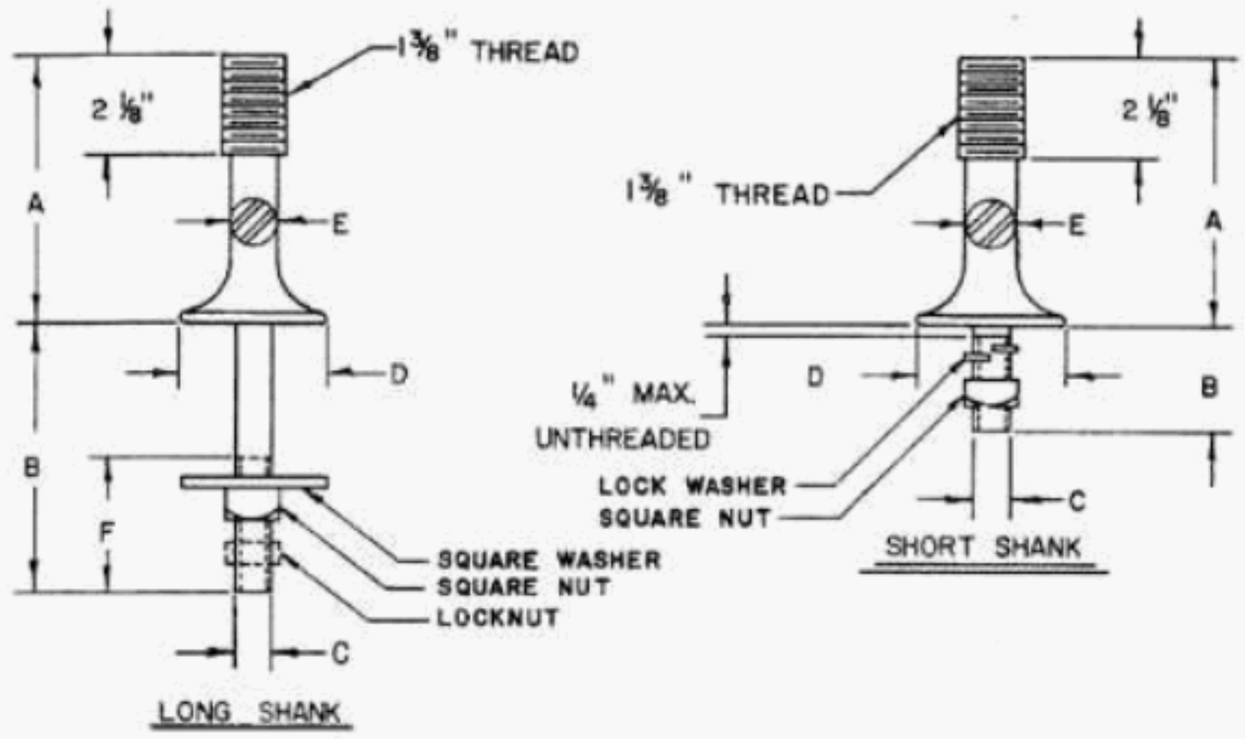


| Item no. | Dimensions of long shank pins for wood crossarms (in) | | | | | | | Min cantilever load at 10° deflection (lb) |
|---|---|---|---|---|---|---|---|---|
| | A | B | C | D | E | F | Square washer size | |
| | Height above arm | Length of shank | Nominal shank thread dia. | Dia. of base | Dia. of shaft | Length of thread | | |
| 12 | 6 ± 1/8 | 7 ± 1/8 | 3/4 | 3 ± 1/8 | 1 ± 1/16 | 3 ± 1/8 | 3 × 3 × 3/16 | 2500 |
| 13 | 7 ± 1/8 | 7 ± 1/8 | 3/4 | 3 ± 1/8 | 1 ± 1/16 | 3 ± 1/8 | 3 × 3 × 3/16 | 2200 |
| 14 | 8 ± 1/8 | 7 ± 1/8 | 3/4 | 3 ± 1/8 | 1 ± 1/16 | 3 ± 1/8 | 3 × 3 × 3/16 | 1900 |
| 15 | 8 ± 1/8 | 7 ± 1/8 | 3/4 | 3-1/2 ± 1/8 | 1-1/8 ± 1/16 | 3 ± 1/8 | 3 × 3 × 3/16 | 2700 |
| 16 | 9 ± 1/8 | 7 ± 1/8 | 3/4 | 3-1/2 ± 1/8 | 1-1/8 ± 1/16 | 3 ± 1/8 | 3 × 3 × 3/16 | 2400 |
| 17 | 10 ± 1/8 | 7 ± 1/8 | 3/4 | 3-1/2 ± 1/8 | 1-1/8 ± 1/16 | 3 ± 1/8 | 3 × 3 × 3/16 | 2100 |
| 18 | 12 ± 1/8 | 7 ± 1/8 | 3/4 | 3-1/2 ± 1/8 | 1-1/8 ± 1/16 | 3 ± 1/8 | 3 × 3 × 3/16 | 1800 |

| Item no. | Dimensions of short shank pins for steel crossarms (in) | | | | | Min cantilever load at 10° deflection (lb) |
|---|---|---|---|---|---|---|
| | A | B | C | D | E | |
| | Height above arm | Length of shank | Nominal shank thread dia. | Dia. of base | Dia. of shaft | |
| 19 | 6 ± 1/8 | 1-3/4 ± 1/8 | 3/4 | 3 ± 1/8 | 1 ± 1/16 | 2500 |
| 20 | 7 ± 1/8 | 1-3/4 ± 1/8 | 3/4 | 3 ± 1/8 | 1 ± 1/16 | 2200 |
| 21 | 8 ± 1/8 | 1-3/4 ± 1/8 | 3/4 | 3 ± 1/8 | 1 ± 1/16 | 1900 |
| 22 | 8 ± 1/8 | 1-3/4 ± 1/8 | 3/4 | 3-1/2 ± 1/8 | 1-1/8 ± 1/16 | 2700 |
| 23 | 9 ± 1/8 | 1-3/4 ± 1/8 | 3/4 | 3-1/2 ± 1/8 | 1-1/8 ± 1/16 | 2400 |
| 24 | 10 ± 1/8 | 1-3/4 ± 1/8 | 3/4 | 3-1/2 ± 1/8 | 1-1/8 ± 1/16 | 2100 |
| 25 | 12 ± 1/8 | 1-3/4 ± 1/8 | 3/4 | 3-1/2 ± 1/8 | 1-1/8 ± 1/16 | 1800 |

**Figure 13—Bolt-type insulator pins with 1-3/8 in diameter lead or nylon alloy threads**


Copyright © 2014 IEEE. All rights reserved.

Authorized licensed use limited to: University of Waterloo. Downloaded on January 13,2016 at 09:00:48 UTC from IEEE Xplore. Restrictions apply.

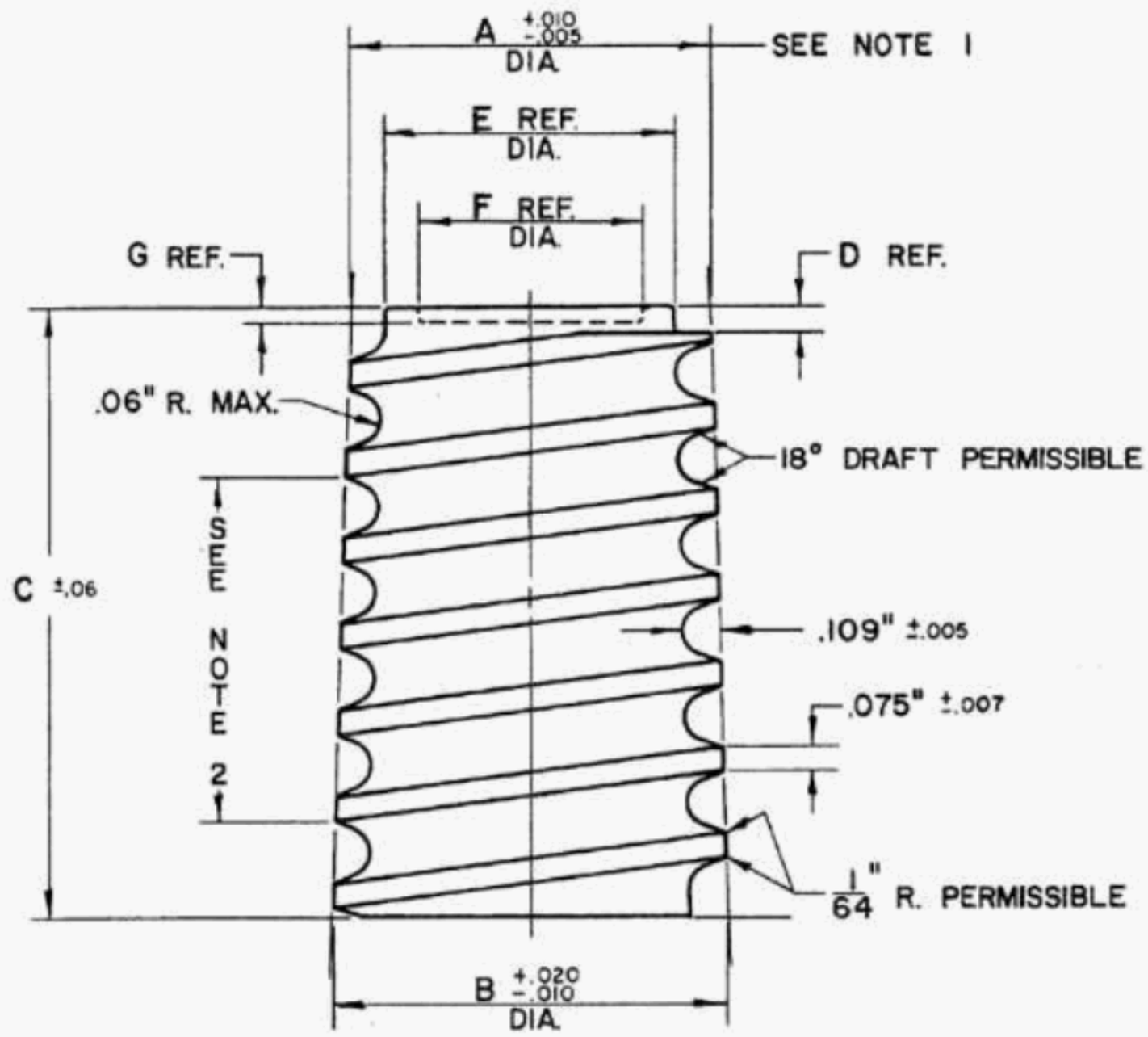


NOTES:
(1) This is the diameter measured between the tapered lines projected along the outside surface of the threads at the top extremity of the head. Taper equals 1/16-in diameter per inch in length.
(2) Four (4) threads per inch.

| Dimensions of threads lead or nylon (in) | | | | | | | |
|---|---|---|---|---|---|---|---|
| **Lead head** | **A** | **B** | **C** | **D** | **E** | **F** | **G** |
| 1 | 1.010 | 1.119 | 1.750 | 5/64 | 13/16 | 5/8 | 3/64 |
| 1-3/8 | 1.385 | 1.518 | 2.130 | 9/64 | 1-1/8 | 3/4 | 7/64 |

**Figure 14—Insulator pins with 1-in and 1-3/8-in diameter lead or nylon alloy threads**


Copyright © 2014 IEEE. All rights reserved.

Authorized licensed use limited to: University of Waterloo. Downloaded on January 13,2016 at 09:00:48 UTC from IEEE Xplore. Restrictions apply.

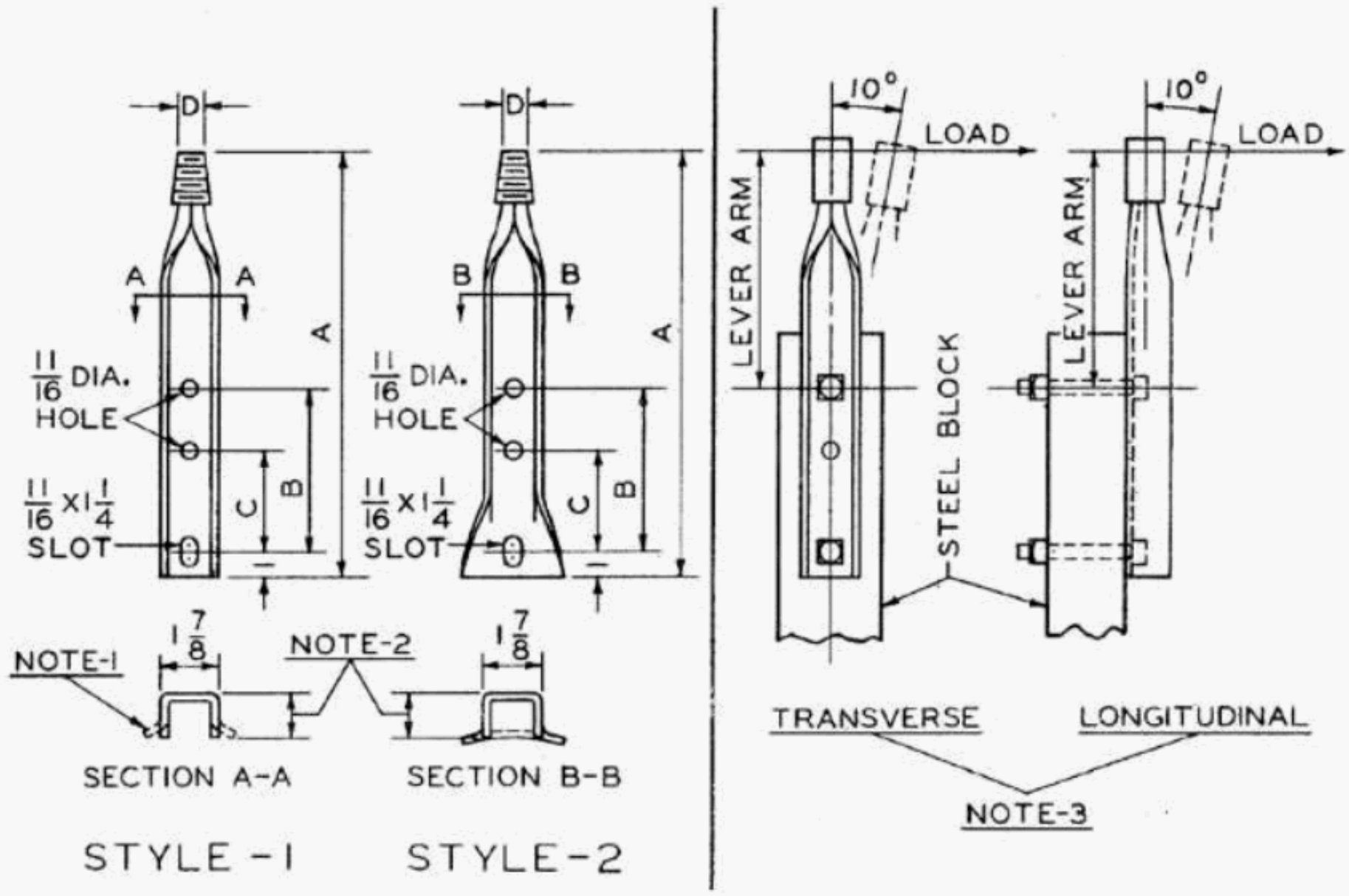


NOTE 1—Channel legs may be flanged or otherwise formed to meet strength requirements.

NOTE 2—This dimension may be varied to provide required strength.

NOTE 3—Flared base (Style–2) pins are mounted with legs of channel section against rigid steel support for testing.

| Item no. | Style | Dimensions of pole-top insulator pins with lead or nylon alloy threads (in) | | | | | Min load at 10° deflection (lb) | |
|---|---|---|---|---|---|---|---|---|
| | | A | B | C | D | Lever arm | Transverse | Longitudinal |
| 1 | 1 | 15 +1/4 –1/8 | 5 ± 1/16 | 5 ± 1/16 | 1 | 9 | 1500 | 1200 |
| 2 | 1 | 18 +1/4 –1/8 | 8 ± 1/16 | 5 ± 1/16 | 1 | 9 | 1500 | 1200 |
| 3 | 1 | 20 +1/4 –1/8 | 8 ± 1/16 | 5 ± 1/16 | 1 | 11 | 1500 | 1200 |
| 5 | 1 | 20 +1/4 –1/8 | 8 ± 1/16 | 3 ± 1/16 | 1 | 11 | 1500 | 1200 |
| 6 | 1 | 20 +1/4 –1/8 | 8 ± 1/16 | 5 ± 1/16 | 1-3/8 | 11 | 1500 | 1200 |
| 7 | 1 | 24 +1/4 –1/8 | 8 ± 1/16 | 5 ± 1/16 | 1 | 15 | 1500 | 1200 |
| 8 | 2 | 16 +1/4 –1/8 | 5 ± 1/16 | 5 ± 1/16 | 1 | 10 | 1500 | 1200 |
| 9 | 2 | 18 +1/4 –1/8 | 8 ± 1/16 | 5 ± 1/16 | 1 | 9 | 1500 | 1200 |
| 10 | 2 | 24 +1/4 –1/8 | 8 ± 1/16 | 5 ± 1/16 | 1 | 15 | 1500 | 1200 |
| Tolerance for holes +1/16 –0; tolerance for slots ± 1/16 | | | | | | | | |

**Figure 15—Dimensions for pole-top insulator pins**


Copyright © 2014 IEEE. All rights reserved.

Authorized licensed use limited to: University of Waterloo. Downloaded on January 13,2016 at 09:00:48 UTC from IEEE Xplore. Restrictions apply.

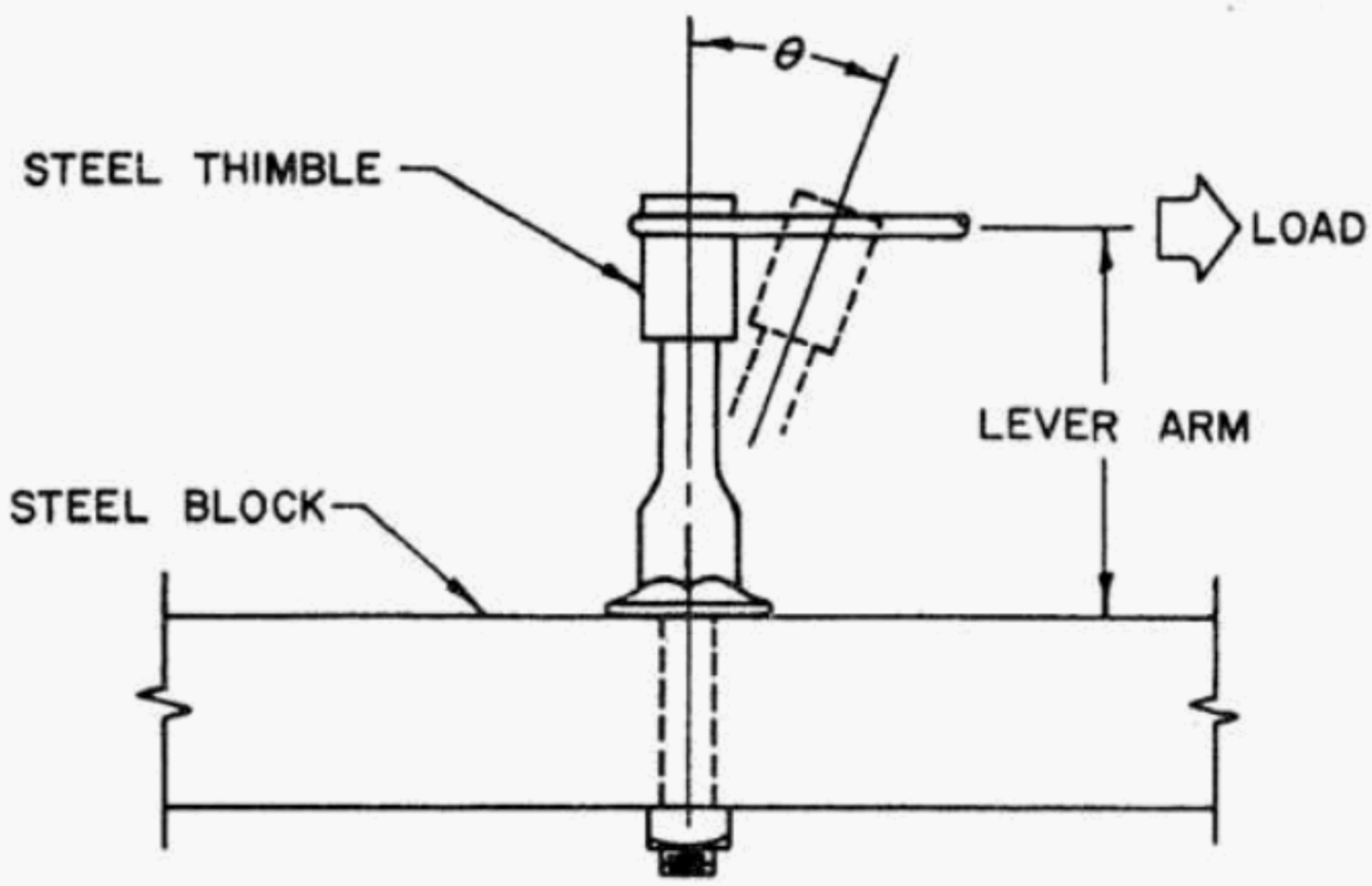


NOTE 1—The angle of deflection shall be measured as the rotation of the steel thimble in the plane defined by the axis of the thimble and the load.

NOTE 2—The load shall be applied at a point equal in height to the lever arm (pin height above arm), at a rate of approximately 0.4 in/min, through a steel thimble screwed to the lead thread.

**Figure 16—Cantilever test**

### 7.4.2 Tests for insulator threads

#### 7.4.2.1 Torsion test

After an initial application of 150 in-lb of torque to the steel thimble, the insulator threads shall withstand an additional 180° of tightening rotation without damage to the thread by stripping or breaking of the bond between the pin body and the thread.

#### 7.4.2.2 Tensile test

After installing the steel thimble on the thread used with pin-type insulators with a torque of 150 in-lb, the thread shall withstand a minimum load of 1000 lb in tension without stripping or pulling of the pin. The load shall be applied to the thimble while the pin is restrained by the shank.

#### 7.4.2.3 Protective coating

Protective coating shall be in accordance with Clause 10.

#### 7.4.2.4 Conductivity test

The volume resistivity of the nylon alloy threads must be a maximum of 10E5 Ω·cm when tested in accordance with ASTM D257 [B13].


Copyright © 2014 IEEE. All rights reserved.

Authorized licensed use limited to: University of Waterloo. Downloaded on January 13,2016 at 09:00:48 UTC from IEEE Xplore. Restrictions apply.

# 8. Pole guards

## 8.1 Material

All pole guards shall be made of a commercial grade of hot-rolled sheet steel and shall be free from scales, flaws, splits, or injurious defects that are visually apparent. They shall be free from sharp edges or projections that might injure the hands.

## 8.2 Dimensions

The dimensions shall be in accordance with Figure 17.

## 8.3 Protective coating

Protective coating shall be in accordance with Clause 10.

# 9. Crossarm gains

## 9.1 Material

Crossarm gains shall be made from hot-rolled steel that has been produced by the open-hearth, basic-oxygen, or electric-furnace process or from malleable- or ductile-type ferrous castings. These materials shall be of a grade and quality suitable to meet the requirements of this standard. Relative to Figure 20 manufacturers shall provide a maximum strength rating for the crossarm shelf. The rating shall be based on testing the gain design where a beam is placed across the shelf and two equal loads are applied to each end of the beam. The load shall be perpendicular to the shelf and in the direction of the shelf as a crossarm will be mounted to the gain. The maximum rating shall be the total applied value of the load applied on both ends of the beam.

## 9.2 Dimensions

Dimensions shall be in accordance with Figure 18, Figure 19, and Figure 20. The size, configuration, and number of teeth shall be designed to permit the teeth to penetrate into both the pole and crossarm to the full length of the teeth without the use of an installing jack.

## 9.3 Protective coating

Protective coating shall be in accordance with Clause 10.


Copyright © 2014 IEEE. All rights reserved.

Authorized licensed use limited to: University of Waterloo. Downloaded on January 13,2016 at 09:00:48 UTC from IEEE Xplore. Restrictions apply.

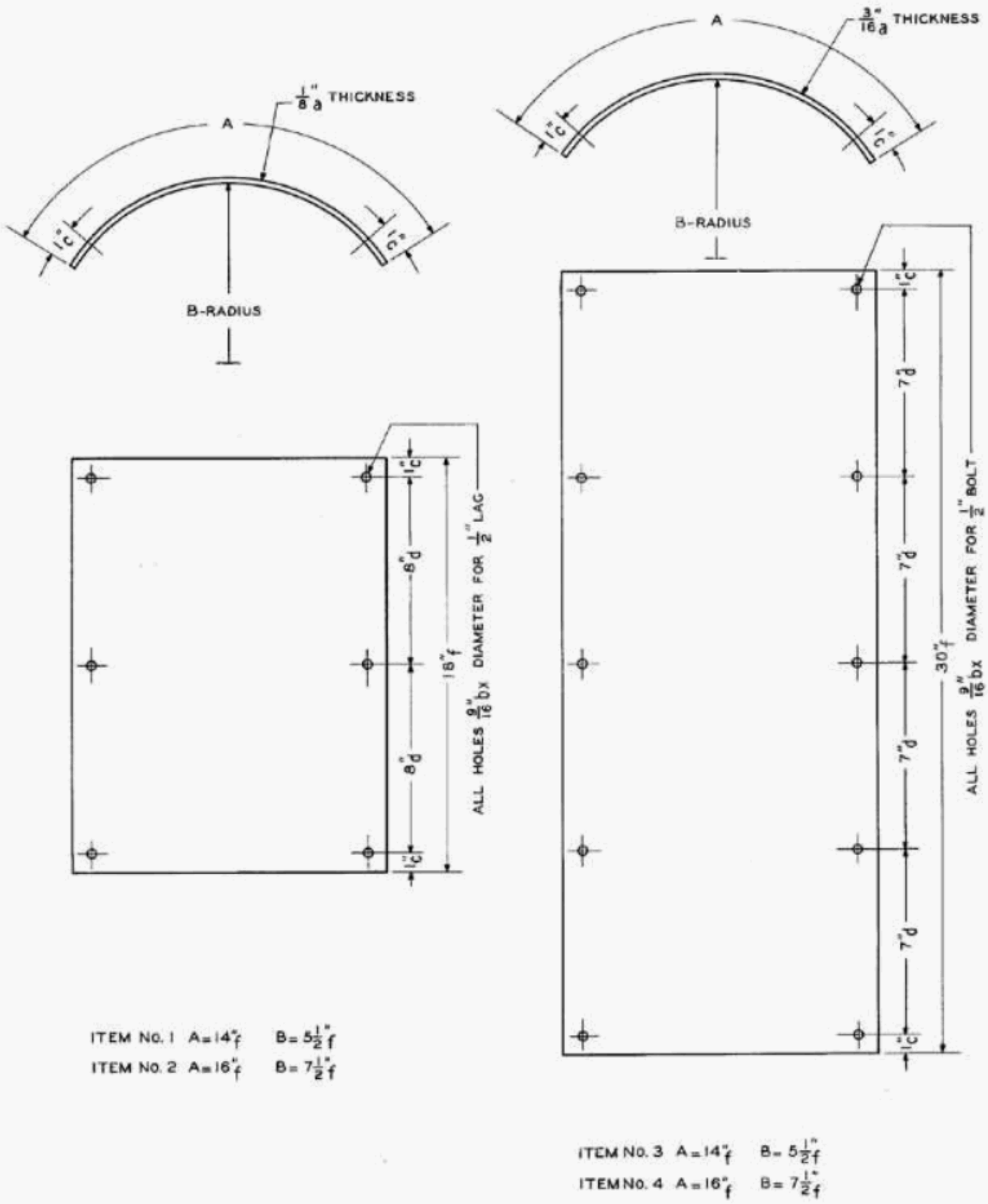


**Figure 17—Pole guards**


Copyright © 2014 IEEE. All rights reserved.

Authorized licensed use limited to: University of Waterloo. Downloaded on January 13,2016 at 09:00:48 UTC from IEEE Xplore. Restrictions apply.

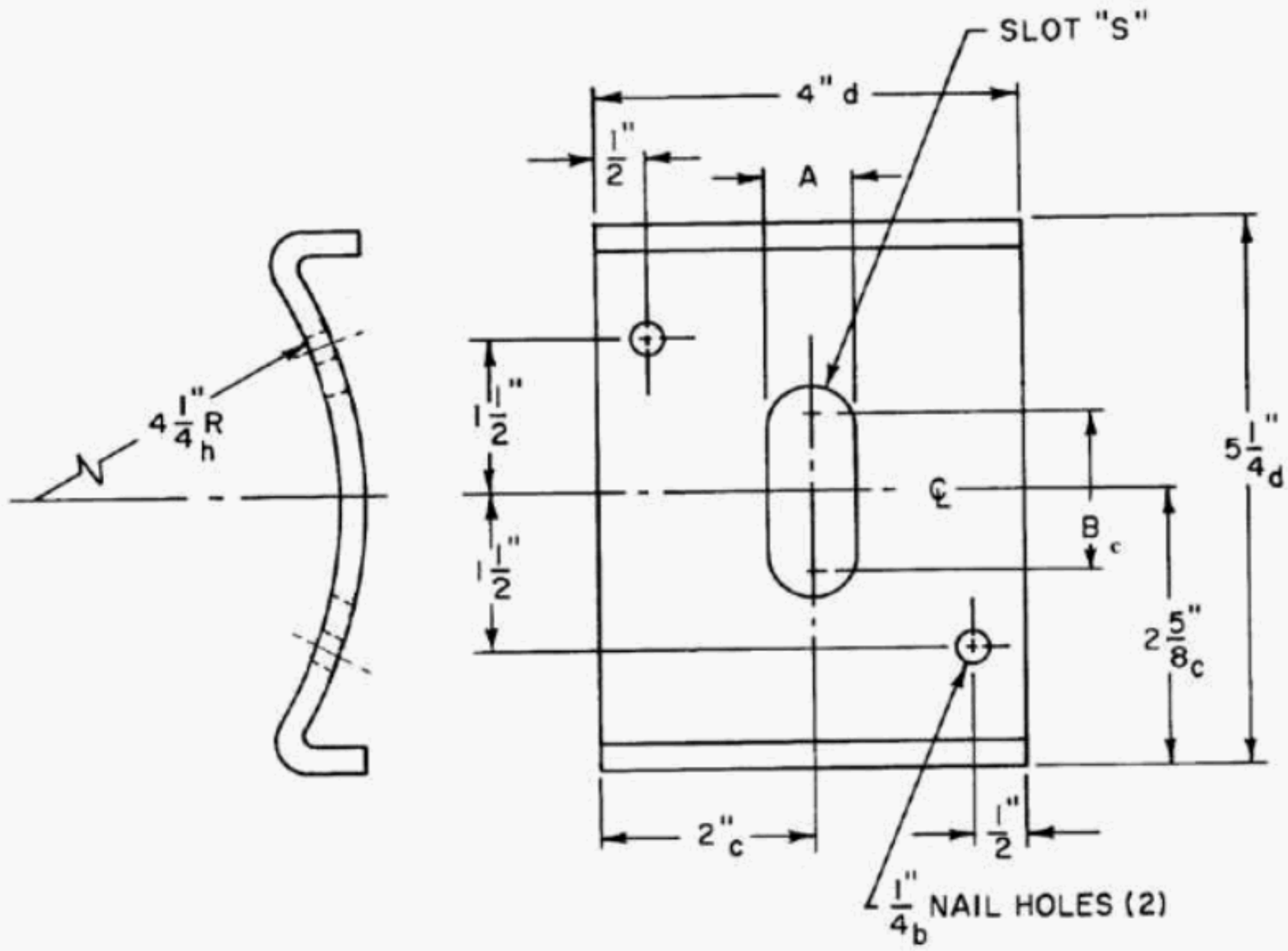


a—1/64" d—1/8" g—3/8"
b—1/32" e—3/16" h—1/2"
c—1/16" f—1/4" x—0"

ALLOWABLE VARIATIONS

SINGLE LETTER INDICATES SAME: ± (a= ±1/64")
TWO LETTERS INDICATE: 1ST +, 2ND − (ax= +1/64" −0")

| ITEM NO. | SLOT "S" | |
|---|---|---|
| | Acx | BMIN |
| 1 | 11/16" | 1-1/2" |
| 2 | 13/16" | 1-1/2" |

**Figure 18—Crossarm gain type 1**


Copyright © 2014 IEEE. All rights reserved.

Authorized licensed use limited to: University of Waterloo. Downloaded on January 13,2016 at 09:00:48 UTC from IEEE Xplore. Restrictions apply.

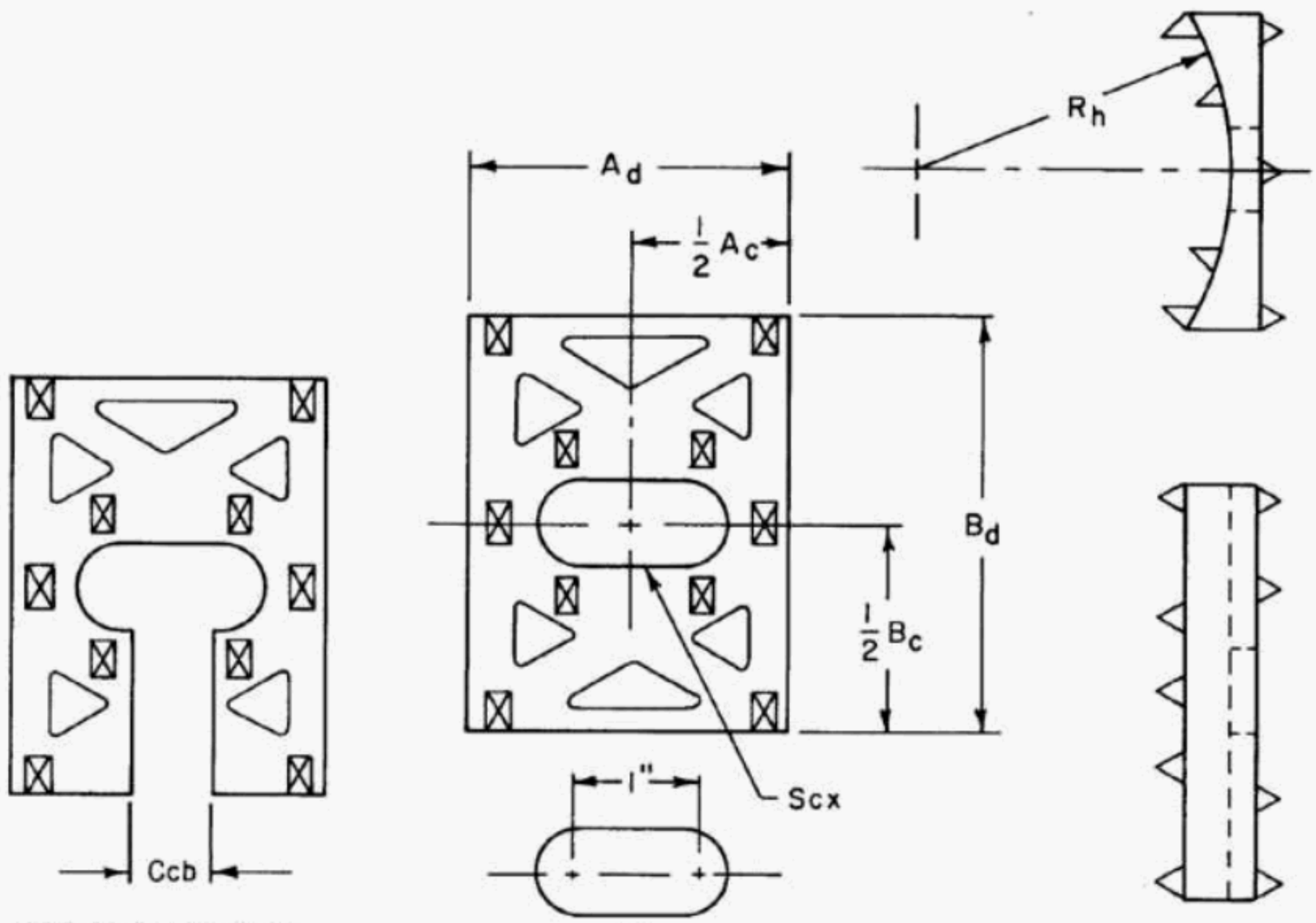


NOTE 1. SIZE, POSITIONS AND NUMBER OF TEETH MAY VARY.

NOTE 2. SIZE, POSITIONS AND NUMBER OF OPENINGS MAY VARY.

NOTE 3. ALL DIMENSIONS ARE NOMINAL UNLESS OTHERWISE SPECIFIED.

a—1/64" d—1/8" g—3/8"
b—1/32" e—3/16" h—1/2"
c—1/16" f—1/4" x—0"

ALLOWABLE VARIATIONS

SINGLE LETTER INDICATES SAME: ±(a= ±1/64")
TWO LETTERS INDICATE: 1ST +, 2ND − (ax= +1/64"−0")

| ITEM NO. | DIMENSIONS | | | | |
|---|---|---|---|---|---|
| | A | B | S | R | C |
| 3 | 4 | 4 | 13/16" hole or 13/16"xl" Slot | 3-1/4" | 13/16" |
| 4 | 3 | 4 | 13/16" hole or 13/16xl" Slot | 3-1/4" | 13/16" |
| 5 | 4 | 5-1/4 | 13/16" hole or 13/16"xl" Slot | 3-1/4" | 13/16" |
| 6 | 4 | 5-1/4 | 15/16" hole or 15/16"xl" Slot | 3-1/4" | 15/16" |
| 7 | 4 | 6-3/4 | 15/16" hole | 4-1/2" | 15/16" |

**Figure 19—Crossarm gain type 2**


Copyright © 2014 IEEE. All rights reserved.

Authorized licensed use limited to: University of Waterloo. Downloaded on January 13,2016 at 09:00:48 UTC from IEEE Xplore. Restrictions apply.

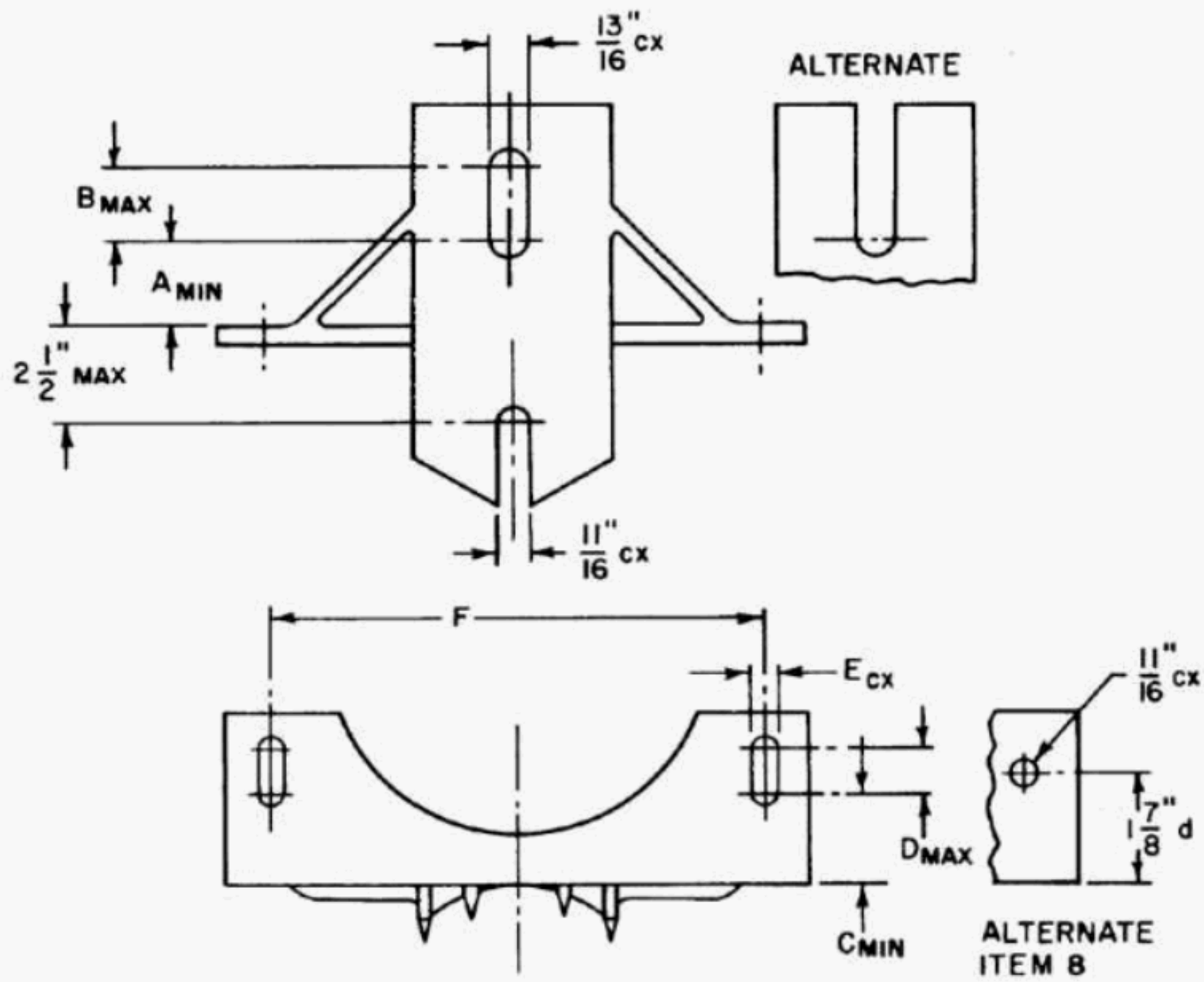


NOTE 1. SIZE, POSITION AND NUMBER OF TEETH MAY VARY.

NOTE 2. SIZE, POSITION AND NUMBER OF OPENINGS MAY VARY.

a—1/64" d—1/8" g—3/8"
b—1/32" e—3/16" h—1/2"
c—1/16" f—1/4" x—0"

ALLOWABLE VARIATIONS

SINGLE LETTER INDICATES SAME: ± (a= ±1/64")
TWO LETTERS INDICATE: 1ST +, 2ND −(ax= +1/64"−0")

| | DIMENSIONS | | | | | |
|---|---|---|---|---|---|---|
| ITEM | A | B | C | D | E | F |
| 8 | 1-11/16" | 3-1/4" | 1-7/16" | 1" | 9/16" | 10" |
| 9 | 3-7/8" | 6-5/8" | 2-1/8" | 1" | 11/16th | 10-1/2" |

**Figure 20—Crossarm gain type 3**


Copyright © 2014 IEEE. All rights reserved.

Authorized licensed use limited to: University of Waterloo. Downloaded on January 13,2016 at 09:00:48 UTC from IEEE Xplore. Restrictions apply.

# 10. Protective coatings

## 10.1 Galvanizing

The hot-dip process shall be in accordance with ASTM A153/A153M-09 and ASTM A123/A123M-13.

## 10.2 Other coatings

Any other method producing a zinc coating that meets the requirements of ASTM A153/A153M-09 for adhesion, purity, and thickness application to the class of material being coated shall be acceptable.

# 11. Marking

All pins, pole eye plates, guy hooks, guy clamps, gains, and pole guards shall bear the manufacturer's symbol or identification mark. Each shipping package of fasteners covered in this standard shall be marked with the vendor's name and catalog number.

# 12. Inspection requirements

The inspection criteria used in this standard correspond to sample size code S-3 with a double sampling plan for normal inspection having an acceptance quality limit (AQL) of 2.5% (see ANSI/ASQC Z1.4-1993 [B1]).

# 13. Determination of acceptability

The acceptability of a lot shall be determined by the use of Table 8.

**Table 8—Acceptance/rejection criteria**

| Test sample | Sample size | Cumulative sample size | Accept | Reject |
|---|---|---|---|---|
| Single | 2 | — | 0 | 1 |
| Single | 3 | — | 0 | 1 |
| Single | 5 | — | 0 | 1 |
| First | 8 | 8 | 0 | 2 |
| Second | 8 | 16 | 1 | 2 |
| First | 13 | 13 | 0 | 2 |
| Second | 13 | 26 | 1 | 2 |
| First | 20 | 20 | 1 | 3 |
| Second | 20 | 40 | 3 | 4 |

The lot shall be considered acceptable when the number of defects found in the first (or single) sample is equal to or less than the first acceptance number from Table 8. If this acceptance criterion is met on the first


Copyright © 2014 IEEE. All rights reserved.

Authorized licensed use limited to: University of Waterloo. Downloaded on January 13,2016 at 09:00:48 UTC from IEEE Xplore. Restrictions apply.

sampling, a second sampling is not needed. If the number of defects found in the first or single sample is equal to or greater than the first rejection number, the lot shall be rejected without a second sampling being allowed. If the number of defects found in the first sample is between the first acceptance and rejection numbers, a second sampling of the size given in Table 1 shall be tested. The number of defects found in the first and second samples shall be accumulated. If the cumulative number of defects is equal to or less than the second acceptance number, the lot shall be considered acceptable. If the cumulative number of defects is equal to or greater than the second rejection number, the lot shall be rejected.

Both the manufacturer and the end user shall reserve the right to reject the entire lot if a tested unit of product is found to have a major defect (i.e., falls below 85% rated ultimate strength).


Copyright © 2014 IEEE. All rights reserved.

Authorized licensed use limited to: University of Waterloo. Downloaded on January 13,2016 at 09:00:48 UTC from IEEE Xplore. Restrictions apply.

# Annex A

(informative)

# Bibliography

Bibliographical references are resources that provide additional or helpful material but do not need to be understood or used to implement this standard. Reference to these resources is made for informational use only.

[B1] ANSI/ASQC Z1.4-1993, Sampling Procedures and Tables for Inspection by Attributes.[6]

[B2] ANSI B18.21.1, American National Standard for Washers: Helical Spring-Lock, Tooth Lock, and Plain Washers (Inch Series).

[B3] ANSI B18.22.2, American National Standard for Plain Washers, Type A.[7]

[B4] ANSI/ASME B18.5, American National Standard for Round Head Bolts.

[B5] ANSI/ASME B1.1, American National Standard for Unified Inch Screw Threads (Un and UNR Thread Form).

[B6] ASME B18.2.1, Standard Specification for Square, Hex, Heavy Hex, and Askew Head Bolts and Hex, Heavy Hex, Hex Flange, Lobed Head, and Lag Screws (Inch Series).[8]

[B7] ASTM A394, Standard Specification for Steel Transmission Tower Bolts, Zinc-Coated and Bare.[9]

[B8] ASTM A536, Standard Specification for Ductile Iron Castings.

[B9] ASTM A569, Hot-rolled steel, carbon (0.15 max percent) sheet and strip, commercial quality.[10]

[B10] ASTM A570, Hot-rolled carbon steel sheet and strip, structural quality.[11]

[B11] ASTM A575, Standard Specification for Steel Bars, Carbon, Merchant Quality, M-Grades.

[B12] ASTM A635, Standard Specification for Steel, Sheet and Strip, Heavy-Thickness Coils, Hot-Rolled, Alloy, Carbon, Structural, High-Strength Low-Alloy, and High-Strength Low-Alloy with Improved Formability, General Requirements for.

[B13] ASTM D257, Standard Test Methods for DC Resistance or Conductance of Insulating Materials.

[6] ANSI publications are available from the American National Standards Institute (http://www.ansi.org).
[7] This ANSI publication was rolled into ANSI B18.21.1.
[8] ASME publications are available from the American Society of Mechanical Engineers (http://www.asme.org).
[9] ASTM publications are available from the American Society for Testing and Materials (http://www.astm.org/).
[10] This standard was withdrawn in 2000 and replaced by ASTM A1011/A1011M.
[11] This standard was withdrawn in 2000 and replaced by ASTM A1011/A1011M.


Copyright © 2014 IEEE. All rights reserved.

Authorized licensed use limited to: University of Waterloo. Downloaded on January 13,2016 at 09:00:48 UTC from IEEE Xplore. Restrictions apply.