DD IEC/PAS 61076-2-108:2009

BSI British Standards

Connectors for electronic equipment — Product requirements —

Part 2-108: Circular connectors — Detail specification for glass to metal seal style M12 connectors with screw-locking intended to mate with connectors conforming to IEC 61076-2-101

NO COPYING WITHOUT BSI PERMISSION EXCEPT AS PERMITTED BY COPYRIGHT LAW

raising standards worldwide™

British Standards

National foreword

This Draft for Development is the UK implementation of IEC/PAS 61076-2-108:2009.

This publication is not to be regarded as a British Standard.

It is being issued in the Draft for Development series of publications and is of a provisional nature. It should be applied on this provisional basis, so that information and experience of its practical application can be obtained.

A PAS is a Technical Specification not fulfilling the requirements for a standard, but made available to the public and established in an organization operating under a given procedure.

A review of this Draft for Development will be carried out not later than three years after its publication.

Notification of the start of the review period, with a request for the submission of comments from users of this Draft for Development, will be made in an announcement in the appropriate issue of Update Standards. According to the replies received, the responsible BSI Committee will judge whether the validity of the PAS should be extended for a further three years or what other action should be taken and pass their comments on to the relevant international committee.

Observations which it is felt should receive attention before the official call for comments will be welcomed. These should be sent to the Secretary of the responsible BSI Technical Committee at British Standards House, 389 Chiswick High Road, London W4 4AL.

The UK participation in its preparation was entrusted to Technical Committee EPL/48, Electromechanical components and mechanical structures for electronic equipment.

A list of organizations represented on this committee can be obtained on request to its secretary.

This publication does not purport to include all the necessary provisions of a contract. Users are responsible for its correct application.

© BSI 2009

ISBN 978 0 580 67828 8

ICS 31.220.10

Compliance with a British Standard cannot confer immunity from legal obligations.

This Draft for Development was published under the authority of the Standards Policy and Strategy Committee on 31 July 2009

Amendments issued since publication

Amd. No.	Date	Text affected

IEC/PAS 61076-2-108

Edition 1.0 2009-06

PUBLICLY AVAILABLE SPECIFICATION

PRE-STANDARD

Connectors for electronic equipment – Product requirements –
Part 2-108: Circular connectors – Detail specification for glass to metal seal style M12 connectors with screw-locking intended to mate with connectors conforming to IEC 61076-2-101

INTERNATIONAL
ELECTROTECHNICAL

COMMISSION

R

PRICE CODE

ICS 31.220.10

ISBN 2-8318-1044-7

® Registered trademark of the International Electrotechnical Commission

CONTENTS

FOREWORD 3
1 General information 6
1.1 Scope 6
1.2 Recommended method of termination 6
1.3 Ratings and characteristics 6
1.4 Normative references 6
1.5 Marking 7
1.6 IEC Type designation 7
1.7 Ordering information 8
1.8 Safety aspects 8
2 Technical information 8
2.1 Definitions 8
2.2 Survey of styles and variants 8
3 Dimensions 11
3.1 General 11
3.2 Interface dimensions 11
3.3 Engagement (mating) information 12
4 Characteristics 14
4.1 Climatic category 14
4.2 Electrical 14
4.3 Mechanical 14
5 Test schedule 15
5.1 General 15
5.2 Test schedule 15
Bibliography
Figure 1 – Fixed connector, glass to metal seal, square flange, front mounting, male contacts 9
Figure 2 – Fixed connector, glass to metal seal, single hole, rear mounting M14 × 1,5, male contacts. 10
Figure 3 – Fixed connector, glass to metal seal, jam nut, rear mounting, male contacts 10
Figure 4 – Fixed connector, glass to metal seal, through flange mounting, male contacts 11
Figure 5 – Engagement (mating) information 12
Table 1 – Styles of fixed connectors 9
Table 2 – Connectors dimensions in mated and locked position 13
Table 3 – Test group P 15
Table 4 – Test group AP 15
Table 5 – Test group BP 16
Table 6 – Test group CP 16

INTERNATIONAL ELECTROTECHNICAL COMMISSION

CONNECTORS FOR ELECTRONIC EQUIPMENT – PRODUCT REQUIREMENTS –

Part 2-108: Circular connectors – Detail specification for glass to metal seal style M12 connectors with screw-locking intended to mate with connectors conforming to IEC 61076-2-101

FOREWORD

1) The International Electrotechnical Commission (IEC) is a worldwide organization for standardization comprising all national electrotechnical committees (IEC National Committees). The object of IEC is to promote international co-operation on all questions concerning standardization in the electrical and electronic fields. To this end and in addition to other activities, IEC publishes International Standards, Technical Specifications, Technical Reports, Publicly Available Specifications (PAS) and Guides (hereafter referred to as "IEC Publication(s)"). Their preparation is entrusted to technical committees; any IEC National Committee interested in the subject dealt with may participate in this preparatory work. International, governmental and non-governmental organizations liaising with the IEC also participate in this preparation. IEC collaborates closely with the International Organization for Standardization (ISO) in accordance with conditions determined by agreement between the two organizations.
2) The formal decisions or agreements of IEC on technical matters express, as nearly as possible, an international consensus of opinion on the relevant subjects since each technical committee has representation from all interested IEC National Committees.
3) IEC Publications have the form of recommendations for international use and are accepted by IEC National Committees in that sense. While all reasonable efforts are made to ensure that the technical content of IEC Publications is accurate, IEC cannot be held responsible for the way in which they are used or for any misinterpretation by any end user.
4) In order to promote international uniformity, IEC National Committees undertake to apply IEC Publications transparently to the maximum extent possible in their national and regional publications. Any divergence between any IEC Publication and the corresponding national or regional publication shall be clearly indicated in the latter.
5) IEC provides no marking procedure to indicate its approval and cannot be rendered responsible for any equipment declared to be in conformity with an IEC Publication.
6) All users should ensure that they have the latest edition of this publication.
7) No liability shall attach to IEC or its directors, employees, servants or agents including individual experts and members of its technical committees and IEC National Committees for any personal injury, property damage or other damage of any nature whatsoever, whether direct or indirect, or for costs (including legal fees) and expenses arising out of the publication, use of, or reliance upon, this IEC Publication or any other IEC Publications.
8) Attention is drawn to the Normative references cited in this publication. Use of the referenced publications is indispensable for the correct application of this publication.
9) Attention is drawn to the possibility that some of the elements of this IEC Publication may be the subject of patent rights. IEC shall not be held responsible for identifying any or all such patent rights.

A PAS is a technical specification not fulfilling the requirements for a standard, but made available to the public.

IEC-PAS 61076-2-108 has been prepared by subcommittee 48B: Connectors, of technical committee 48: Electromechanical components and mechanical structures for electronic equipment.

The text of this PAS is based on the following document:	This PAS was approved for publication by the P-members of the committee concerned as indicated in the following document
Draft PAS	**Report on voting**
48B/1975/PAS	48B/2037/RVD

Following publication of this PAS, which is a pre-standard publication, the technical committee or subcommittee concerned may transform it into an International Standard.

This PAS shall remain valid for an initial maximum period of 3 years starting from the publication date. The validity may be extended for a single 3-year period, following which it shall be revised to become another type of normative document, or shall be withdrawn.

This PAS complements IEC 61076-2-101 Ed.2 by adding glass to metal seal styles and the required testing. The following notable additions have been made:

– the introduction of glass to metal seal fixed connector styles WM, XM, YM and ZM;
– the glass to metal styles are intermateable with free connector styles in IEC 61076-2-101 Ed.2;
– pressure differential test has been added to the test groups;
– additional contact termination types added:
  - eyelet – the termination end is flattened and pierced with a hole to provide both mechanical retention of the wire as well as solder attachment,
  - rounded – terminal post with rounded (domed) end,
  - PCB – termination spills suitable for insertion into printed circuits.

CONNECTORS FOR ELECTRONIC EQUIPMENT – PRODUCT REQUIREMENTS –

Part 2-108: Circular connectors – Detail specification for glass to metal seal style M12 connectors with screw-locking intended to mate with connectors conforming to IEC 61076-2-101

IEC SC 48B – Connectors Specification available from: IEC General secretariat or from the addresses shown on the inside cover.	IEC/PAS 61076-2-108 Ed.1
ELECTRONIC COMPONENTS DETAIL SPECIFICATION in accordance with IEC 61076-1	Page 5 of 17
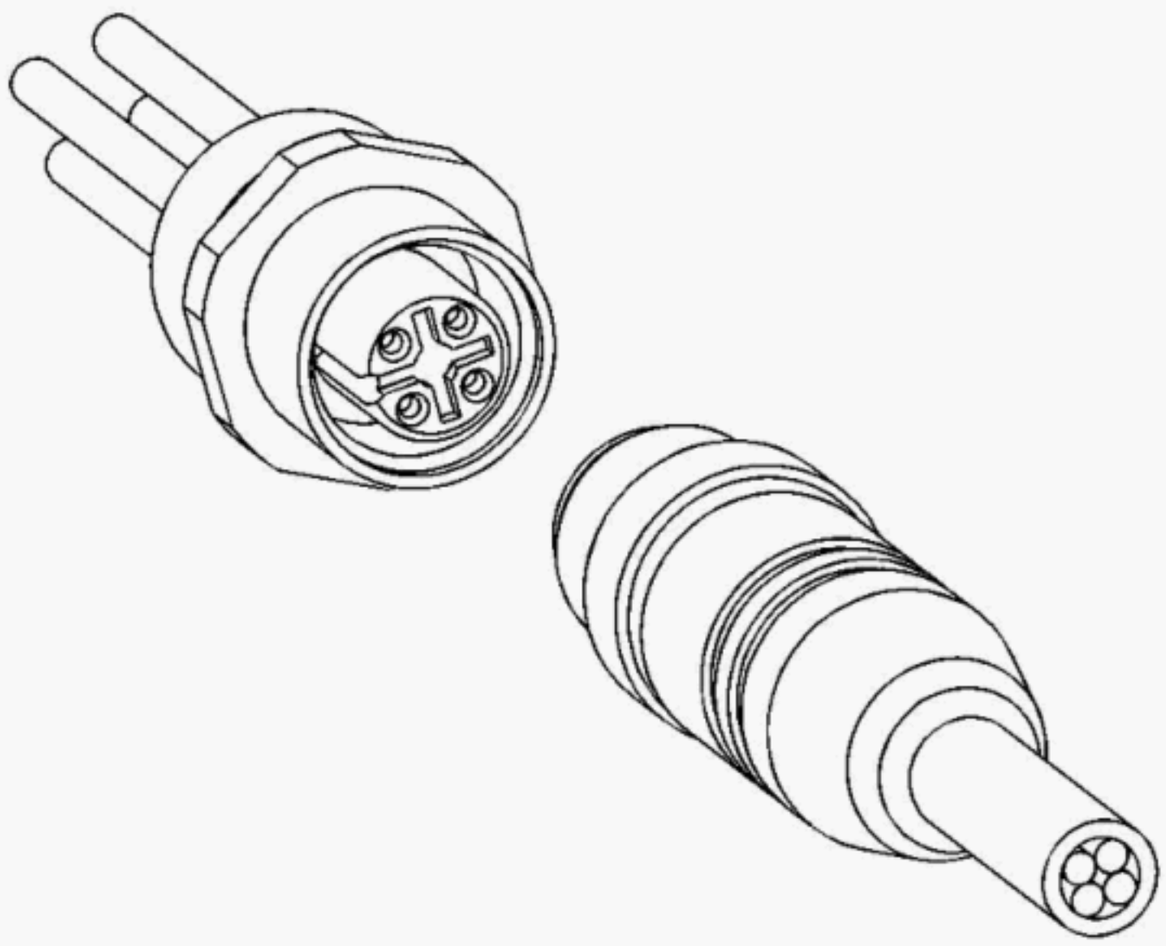 Fixed connector with glass to metal seal Free connector shown is representative only and shall conform to IEC 61076-2-101	Circular connectors M12 2 to 12 way Male contacts Female connectors Rewireable Fixed connectors with glass to metal seals Flange mounting Single hole mounting Pin contacts only

1 General information

Throughout this standard dimensions are in mm.

1.1 Scope

This PAS describes circular connectors M12 typically used for industrial process measurement and control. These connectors consist of fixed glass to metal sealed styles with rewireable male contacts. Female connectors have round contacts ∅ 0,6 mm, ∅ 0,76 mm, ∅ 0,8 mm and ∅ 1,0 mm.

The different codings prevent the mating of these coded male or female connectors to any other interfaces and cross-mating between the different codings.

NOTE M12 is the dimension of the thread of the screw locking mechanism of these circular connectors.

1.2 Recommended method of termination

The contact terminations shall be of the following types: Eyelet, solder PCB, rounded or crimp.

1.2.1 Number of contacts or contact cavities

The number of contacts or contact cavities shall be in accordance with 1.2.1 of IEC 61076-2-101.

1.3 Ratings and characteristics

The ratings and characteristics shall be in accordance with 1.3 of IEC 61076-2-101.

1.4 Normative references

The following referenced documents are indispensable for the application of this document. For dated references, only the edition cited applies. For undated references, the latest edition of the referenced document (including any amendments) applies.

IEC 60050-581, *International Electrotechnical Vocabulary (IEV) – Part 581: Electromechanical components for electronic equipment*

IEC 60512 (all parts), *Connectors for electronic equipment – Tests and measurements*

IEC 61076-1:2006, *Connectors for electronic equipment – Product requirements – Part 1: Generic specification*

IEC 61076-2-101:2008, *Connectors for electronic equipment – Product requirements – Part 2-101: Circular connectors – Detail specification for M12 connectors with screw-locking*

IEC 61984:2008, *Connectors – Safety requirements and tests*

1.5 Marking

The marking of the connector and the package shall be in accordance with 2.7 of IEC 61076-1.

1.6 IEC Type designation

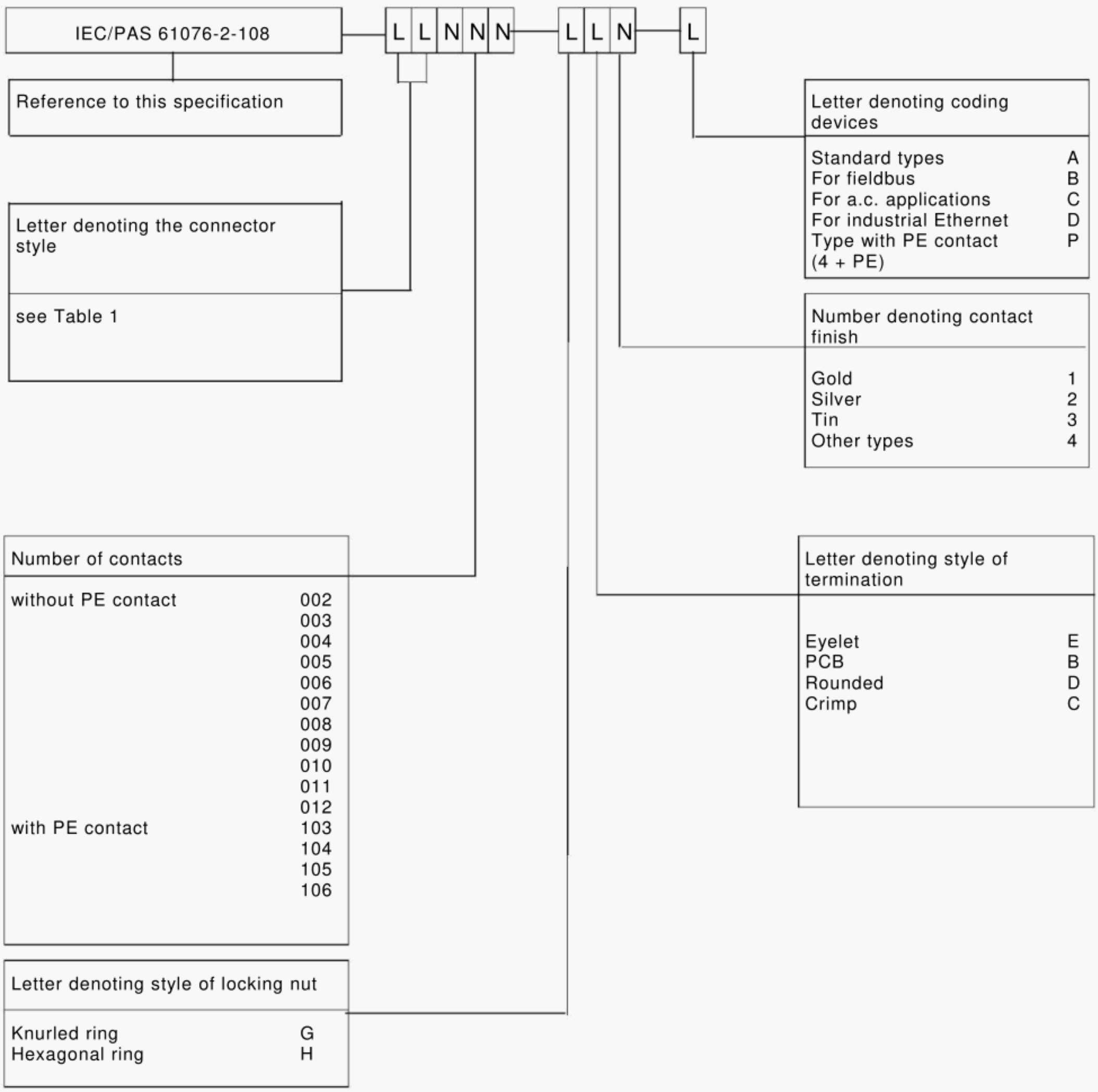

Notes:

This connector range is fully intermatable and interchangeable with connectors that conform to IEC 61076-2-101.

The range consists of fixed connector styles only, with male contacts. The mating connector is a free connector style with female contacts conforming to IEC 61076-2-101.

In the above type designation “L” stands for letter and “N” stands for number.

1.7 Ordering information

For ordering connectors to this standard, the type designation described in 1.6 shall be used.

Example 1: Glass to metal seal fixed connector YM 004 – HB1-A: Fixed connector Style YM, glass to metal seal, jam nut rear mounting, male contacts with 5 mm long PCB terminations, 4 way, gold contact finish, coding A.

1.8 Safety aspects

For safety aspects IEC 61984 shall be considered unless otherwise specified.

2 Technical information

2.1 Terms and definitions

For the purposes of this document, the terms and definitions given in IEC 60050-581 apply as well as the following.

2.1.1
glass to metal seal
a form of construction whereby the connector contacts are housed in a glass insert which is inside a metal connector shell so as to form a connector with a hermetic seal which may used to isolate differing environments

2.1.2
matched glass to metal seal
a form of construction whereby the thermal expansion characteristics of the glass, the metallic contacts, and the connector shell are similar and the seal between the glass and the metal is formed by a chemical bond

2.1.3
compression glass to metal seal
a form of construction whereby due to the its higher coefficient of expansion the shell contracts around the glass during the solidification phase of manufacture applying a compression force to the glass insert so as to form a seal

2.1.4
mounting orientation
circular mounting position of the connector in relation to the polarization of the mating interface

NOTE Where the free connector has an angled cable entry (as opposed to an in-line cable entry), the angle between the cable entry direction and the polarization keyway should be specified.

2.2 Survey of styles and variants

For all connector styles with cables the length E of the cable/contact shall be agreed between manufacturer and user.

For interface dimensions see 3.2.

The interface dimensions of the female styles shall be chosen according to the common characteristics of the male styles.

For reliable intermateability the dimensions of the female connector body as detailed in Annex A of IEC 61076-2-101 shall be met.

2.2.1 Fixed connectors

Table 1 – Styles of fixed connectors

Style	Description
WM	Fixed connector, glass to metal seal, single hole, rear mounting M14 x 1,5, male contacts
XM	Fixed connector, glass to metal seal, round flange, front mounting, male contacts
YM	Fixed connector, glass to metal seal, jam nut, rear mounting, male contacts
ZM	Fixed connector, glass to metal seal, through flange mounting, male contacts
NOTE For new connectors according to this PAS, Pg screw threads according to DIN 46320 (withdrawn) shall not be applicable. For information on Pg threads, see Annex B of IEC 61076-2-101.	

2.2.1.1 Style WM

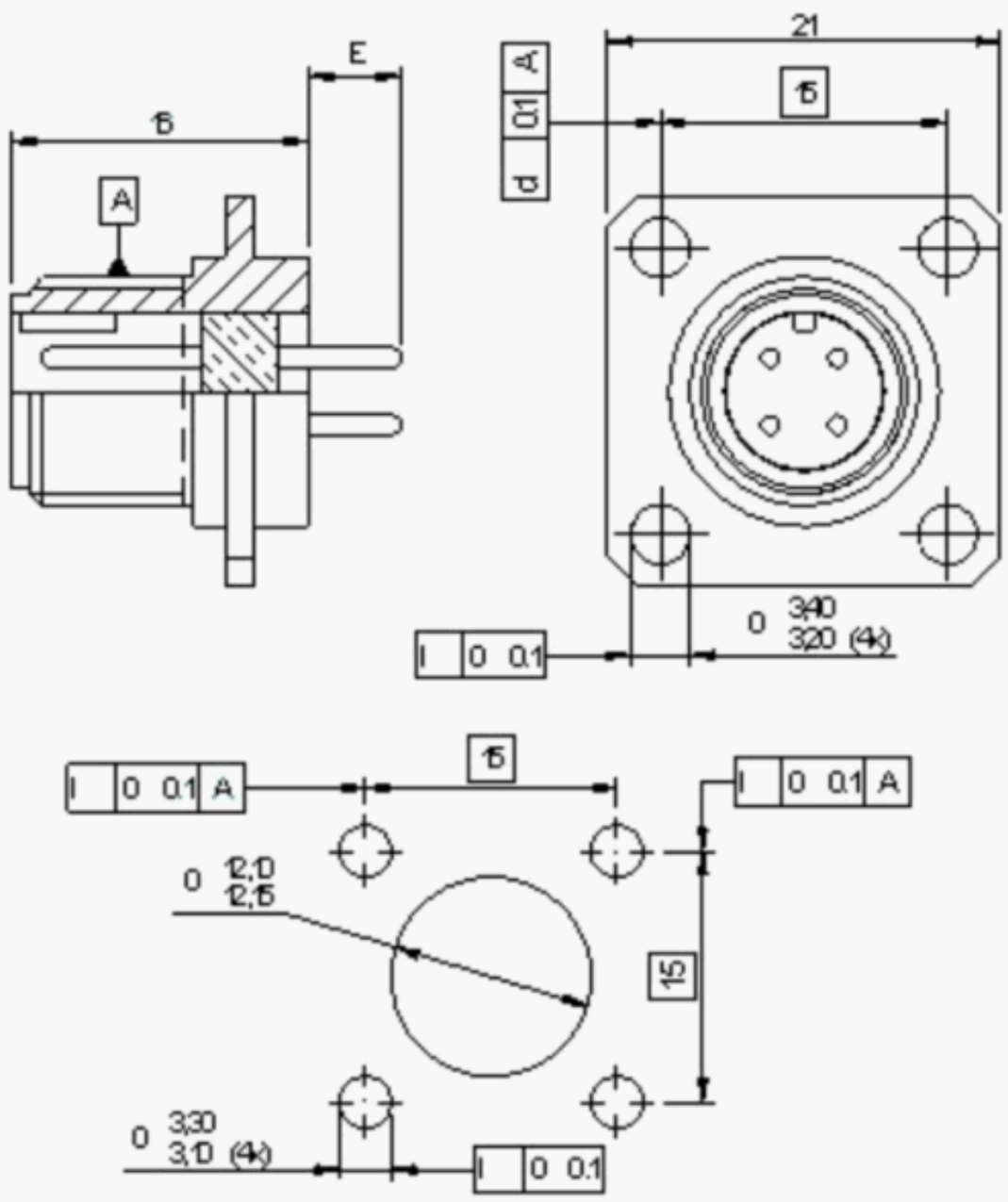

E Length of contacts

Type of contact shall be Eyelet, solder, PCB or rounded.

Figure 1 – Fixed connector, glass to metal seal, square flange, front mounting, male contacts

2.2.1.2 Style XM

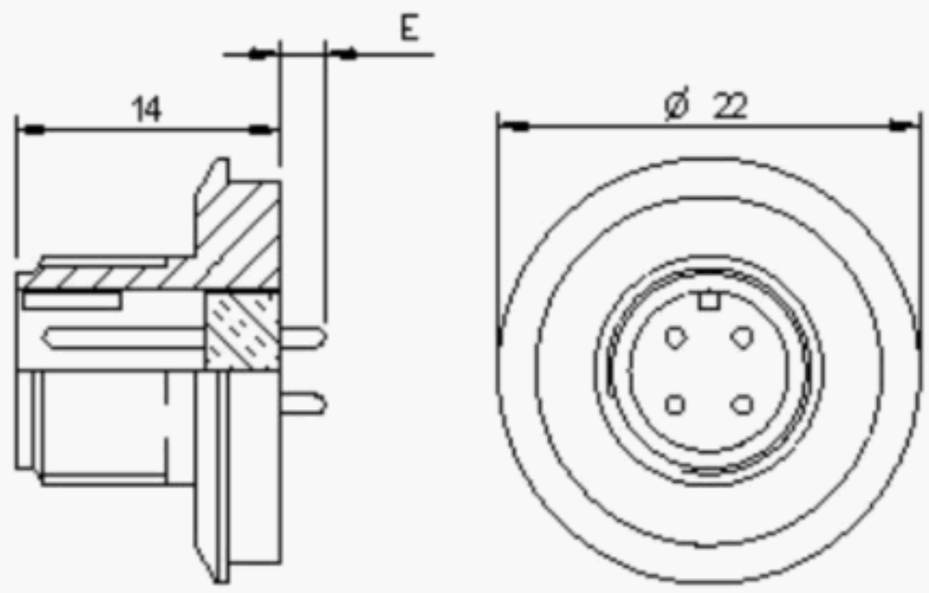

E Length of contacts

Type of contact can be Eyelet, solder, PCB or rounded.

Figure 2 – Fixed connector, glass to metal seal, single hole, rear mounting M14 × 1,5, male contacts

2.2.1.3 Style YM

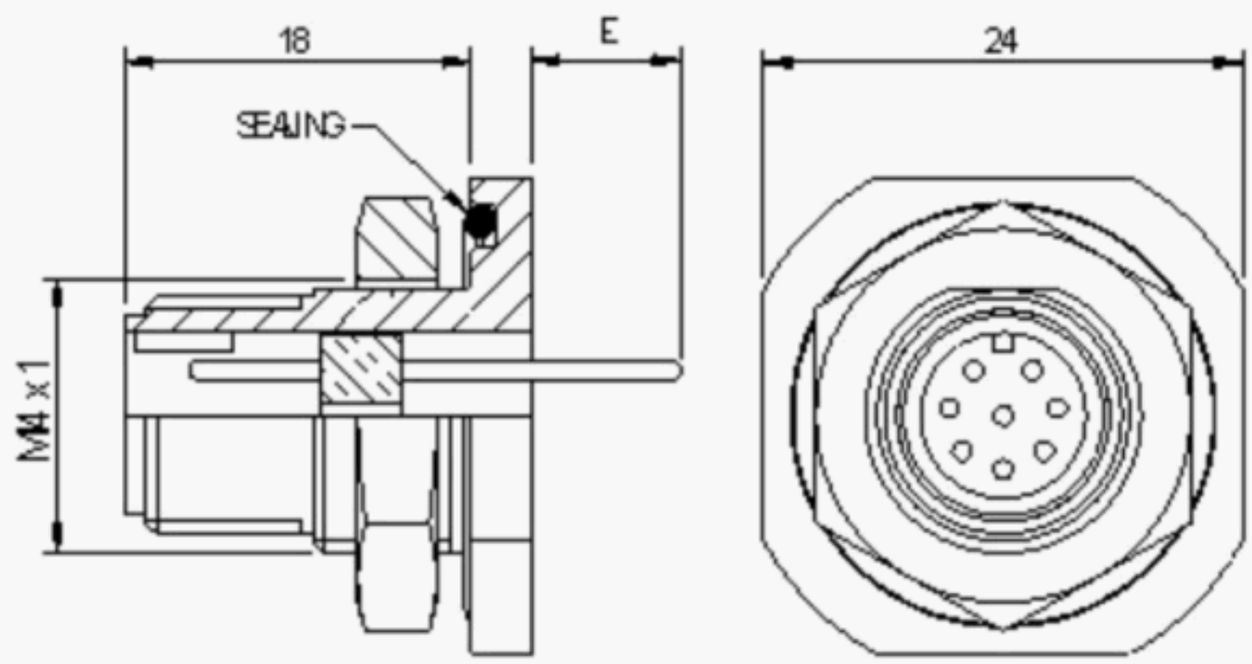

E = Length of contacts

Type of contact shall be Eyelet, solder, PCB or rounded.

Figure 3 – Fixed connector, glass to metal seal, jam nut, rear mounting, male contacts

2.2.1.4 Style ZM

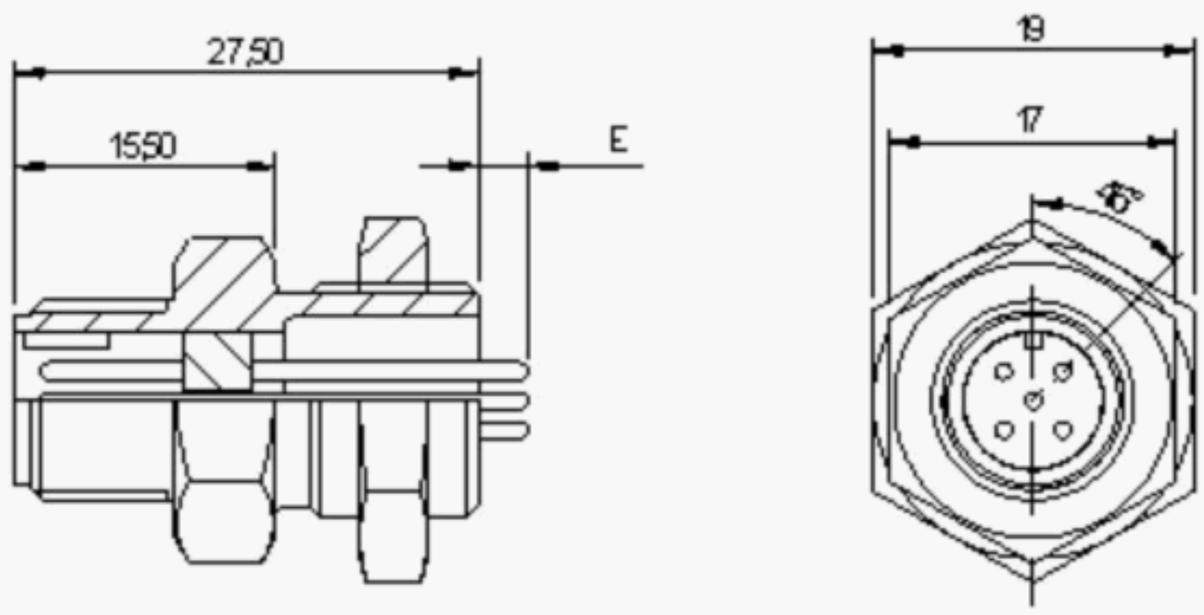

E = Length of contacts

Type of contact shall be Eyelet, solder, PCB or rounded.

Figure 4 – Fixed connector, glass to metal seal, through flange mounting, male contacts

3 Dimensions

3.1 General

The general dimensions shall be in accordance with 3.1 of IEC 61076-2-101.

3.2 Interface dimensions

The interface dimensions shall be in accordance with 3.2 of IEC 61076-2-101.

3.3 Engagement (mating) information

NOTE Intermating free connector styles conform to 3.3 of IEC 61076-2-101.

Arrows indicate mating direction

Housing variant 1

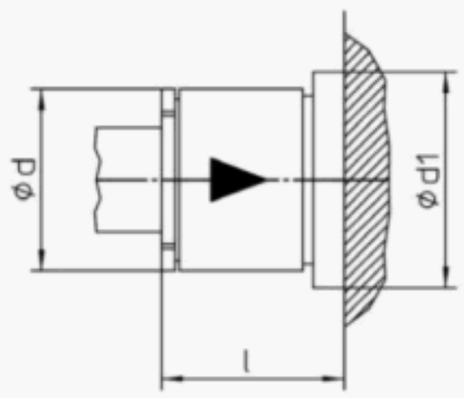

Figure 5a

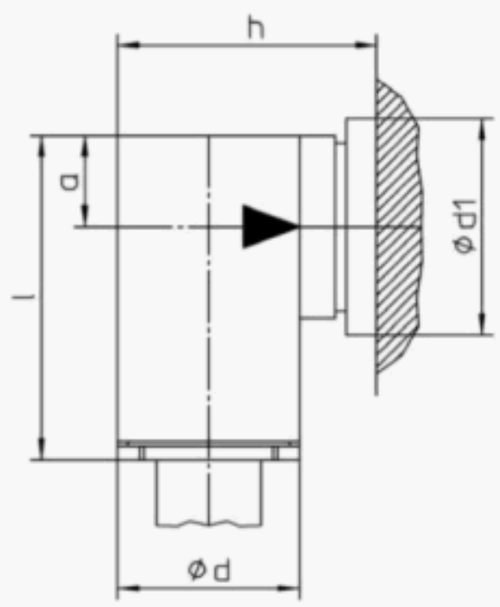

Figure 5b

Figure 5 – Engagement (mating) information

Table 2 – Connectors dimensions in mated and locked position

Figure	Combination of styles	a max	d max	d1	h [a] max	l [a] max
5 a)	WM-JF	---	Ø21	14,2	n/a	69
	WM-LF	---	Ø16	14,2	n/a	52
	XM-JF	---	Ø21	18	n/a	67,5
	XM-LF	---	Ø16	18	n/a	50,5
	YM-JF	---	Ø21	14	n/a	72,5
	YM-LF	---	Ø16	14	n/a	55,5
	ZM-JF	---	Ø21	19	n/a	71,5
	ZM-LF	---	Ø16	19	n/a	54,5
5 b)	WM-KF	11	Ø21	14,2	64	43,5
	WM-MF	8	Ø16	14,2	36,5	39
	XM-KF	11	Ø21	18	62,5	43,5
	XM-MF	8	Ø16	18	35	39
	YM-KF	11	Ø21	14	67,5	43,5
	YM-MF	8	Ø16	14	40	39
	ZM-KF	11	Ø21	19	66,5	43,5
	ZM-MF	8	Ø16	19	39	39

All dimensions are in mm.

See Figure 5.

[a] Dimensions in mated and locked position, additional space for insertion: 15 mm.

4 Characteristics

4.1 Climatic category

The climatic category characteristics shall be in accordance with 4.1 of IEC 61076-2-101.

4.2 Electrical

The electrical characteristics shall be in accordance with 4.2 of IEC 61076-2-101.

4.3 Mechanical

4.3.1 IP degree of protection

The IP degree of protection shall be in accordance with 4.3.1 of IEC 61076-2-101.

4.3.2 Mechanical operation

The mechanical operation shall be in accordance with 4.3.2 of IEC 61076-2-101.

4.3.3 Insertion and withdrawal forces

The mechanical operation shall be in accordance with 4.3.3 of IEC 61076-2-101.

4.3.4 Contact retention in insert

Not applicable, see also 4.3.4 of IEC 61076-2-101.

4.3.5 Polarizing method

The polarizing method shall be in accordance with 4.3.5 of IEC 61076-2-101.

4.3.6 Vibration (sinusoidal)

The vibration (sinusoidal) shall be in accordance with 4.3.6 of IEC 61076-2-101.

4.3.7 Pressure differential

Conditions: IEC 60512 Test 14b
Standard atmospheric conditions
Connectors unmated
Lubricant not required
Pressure differential 100 ± 5 kPa
No leakage permitted

5 Test schedule

5.1 General

The test schedule shall be in accordance with 5.1 of IEC 61076-2-101.

5.2 Test schedule

5.2.1 Test group P – Preliminary

The test group P-Preliminary shall be in accordance with 5.2.1 of IEC 61076-2-101 except for the addition of test phase P6 as below:

Table 3 – Test group P

Test phase	Test			Measurement to be performed		Requirements
	Title	IEC 60512 Test No.	Severity or condition of test	Title	IEC 60512 Test No.	All connector styles
P6	Differential pressure	14b	As 4.3.7 at ambient temperature			There shall be no leakage

The specimens shall be divided into five groups. All connectors in each group shall undergo the tests specified for the relevant group.

5.2.2 Test group AP – Dynamic/ Climatic

The test group AP – Dynamic/ Climatic shall be in accordance with 5.2.2 of IEC 61076-2-101 except for the addition of the pressure differential test into Test phase AP7.3 as below:

Table 4 – Test group AP

Test phase	Test			Measurement to be performed		Requirements
	Title	IEC 60512 Test No.	Severity or condition of test	Title	IEC 60512 Test No.	
AP7.3				Contact resistance – Millivolt level	2	Rise in relation to initial values 15 mΩ max.
					2b	
				Insulation resistance	3a	10^8 Ω min.
				Voltage proof	4a	According to 4.2.2
				Insertion and withdrawal forces	13b	See 4.3.3
				Pressure differential	14b	Requirements as 4.3.7

5.2.3 Test group BP – Mechanical endurance

The test group BP – Mechanical endurance shall be in accordance with 5.2.3 of IEC 61076-2-101 except for the addition of the pressure differential test into Test phase BP4 as below:

Table 5 – Test group BP

Test phase	Test			Measurement to be performed		Requirements
	Title	IEC 60512 Test No.	Severity or condition of test	Title	IEC 60512 Test No.	
BP4	Mechanical operation (remaining half of specified number of operations)	9a	See BP2	Contact resistance – Millivolt level method	2a	Rise in relation to initial values 15 mΩ max.
				Insulation resistance	3a	10^8 Ω min.
				Voltage proof	4a	According to 4.2.2
			Unmated connectors	Pressure differential	14b	Requirements as 4.3.7
				Visual examination	1a	There shall be no defect that would impair normal operation

5.2.4 Test group CP – Electrical load

The test group CP – Electrical load shall be in accordance with 5.2.4 of IEC 61076-2-101 except for the addition of the pressure differential test into Test phase CP1 and CP3 as below:

Table 6 – Test group CP

Test phase	Test			Measurement to be performed		Requirements
	Title	IEC 60512 Test No.	Severity or condition of test	Title	IEC 60512 Test No.	All connector styles
CP1	Rapid change of temperature	11d	–25 °C to 85 °C, t = 1 h, 5 cycles	Contact resistance – Millivolt level method	2a	Rise in relation to initial values 15 mΩ max.
				Insulation resistance	3a	10^8 Ω min.
				Voltage proof	4a	According to 4.2.2
				Pressure Differential	14b	Requirements as 4.3.7
CP3	Electrical load and temperature	9b	Duration: 1000 h Ambient temperature: 40 °C Current load according to 4.2.3 Recovery time: 2 h Temperature sensor in centre of specimen	Contact resistance – Millivolt level method	2a	Rise in relation to initial values 15 mΩ max.
				Insulation resistance	3a	10^8 Ω min.
				Voltage proof	4a	According to 4.2.2
				Pressure differential	14b	Requirements as 4.3.7

5.2.5 Test group DP – Chemical resistivity

The test group DP – Chemical resistivity shall be in accordance with 5.2.5 of IEC 61076-2-101.

5.2.6 Test group EP – Connection method tests

Test group EP – Connection method tests are not required.

5.2.7 Test group FP - Electrical transmission requirements

The test group FP - Electrical transmission requirements shall be in accordance with 5.2.7 of IEC 61076-2-101.

Bibliography

IEC 60664-1:2007, *Insulation coordination for equipment within low-voltage systems – Part 1: Principles, requirements and tests*

IEC 61076-2-001:2001, *Connectors for electronic equipment – Part 2-001: Circular connectors – Blank detail specification*

This page deliberately left blank

British Standards Institution (BSI)

BSI is the independent national body responsible for preparing British Standards. It presents the UK view on standards in Europe and at the international level.

It is incorporated by Royal Charter.

Revisions

British Standards are updated by amendment or revision. Users of British Standards should make sure that they possess the latest amendments or editions.

It is the constant aim of BSI to improve the quality of our products and services. We would be grateful if anyone finding an inaccuracy or ambiguity while using this British Standard would inform the Secretary of the technical committee responsible, the identity of which can be found on the inside front cover.

Tel: +44 (0)20 8996 9000 Fax: +44 (0)20 8996 7400

BSI offers members an individual updating service called PLUS which ensures that subscribers automatically receive the latest editions of standards.

Buying standards

Orders for all BSI, international and foreign standards publications should be addressed to BSI Customer Services.

Tel: +44 (0)20 8996 9001 Fax: +44 (0)20 8996 7001
Email: orders@bsigroup.com

You may also buy directly using a debit/credit card from the BSI Shop on the website www.bsigroup.com/shop

In response to orders for international standards, it is BSI policy to supply the BSI implementation of those that have been published as British Standards, unless otherwise requested.

Information on standards

BSI provides a wide range of information on national, European and international standards through its Library.

Various BSI electronic information services are also available which give
details on all its products and services. Contact the Information Centre.

Tel: +44 (0)20 8996 7111
Fax: +44 (0)20 8996 7048 Email: info@bsigroup.com

Subscribing members of BSI are kept up to date with standards developments and receive substantial discounts on the purchase price
of standards. For details of these and other benefits contact Membership
Administration.

Tel: +44 (0)20 8996 7002 Fax: +44 (0)20 8996 7001
Email: membership@bsigroup.com
Information regarding online access to British Standards via British
Standards Online can be found at www.bsigroup.com/BSOL

Further information about BSI is available on the BSI website at www.bsigroup.com

Copyright

Copyright subsists in all BSI publications. BSI also holds the copyright, in the UK, of the publications of the international standardization bodies. Except as permitted under the Copyright, Designs and Patents Act 1988 no extract may be reproduced, stored in a retrieval system or transmitted in any form or by any means – electronic, photocopying, recording or otherwise – without prior written permission from BSI.
This does not preclude the free use, in the course of implementing the standard of necessary
details such as symbols, and size, type or grade designations. If these details are to be used for
any other purpose than implementation then the prior written permission of BSI must be obtained. Details and advice can be obtained from the Copyright & Licensing Manager.

Tel: +44 (0)20 8996 7070 Email: copyright@bsigroup.com

BSI Group Headquarters

389 Chiswick High Road London W4 4AL UK

Tel +44 (0)20 8996 9001
Fax +44 (0)20 8996 7001
www.bsigroup.com/standards

British Standards

raising standards worldwide™