c) working standard (calibrated tape in comparison with the reference tape which is traceable to the national reference and which is kept in the organization's branch offices).

The specific procedure varies depending on the ATG technology and/or design. Results of the accuracy test shall be consistent with the criteria set forth in the main body of this part of ISO 18132.

© ISO 2011 – All rights reserved

Annex B
(normative)

Calibration and verification of radar-type ATG

B.1 General

Radar-type ATGs consist of an antenna, microwave transceiver, and other required components (see Figure B.1).

The ATG shall provide, as a minimum, for a verification mode to allow for verification on board at a level near the normal safe fill height while the cargo tank is in service.

The error shall not exceed that described in the main body of this part of ISO 18132.

© ISO 2011 – All rights reserved

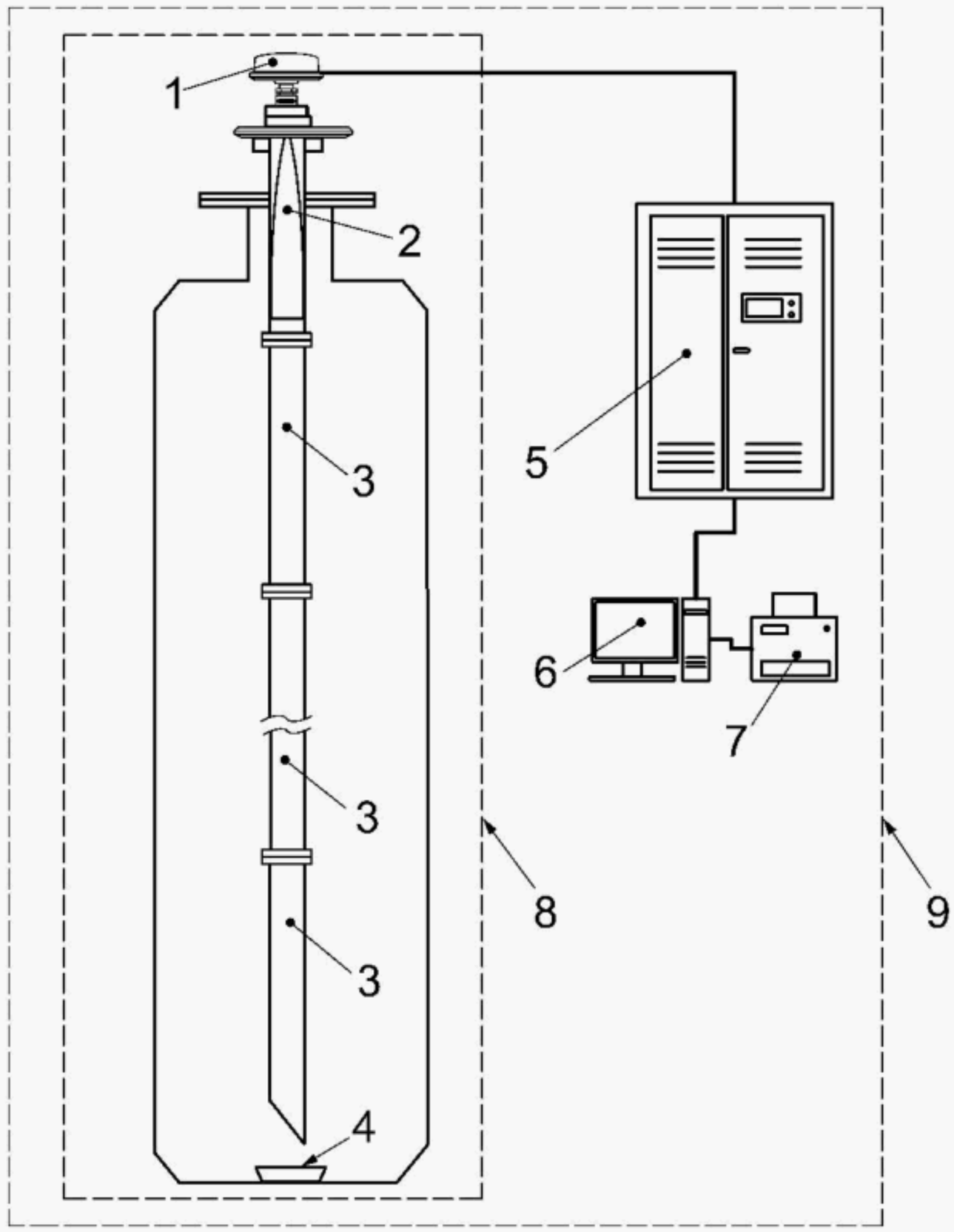

Key

1 radar transmitter
2 antenna
3 still pipe
4 attenuator
5 control unit
6 display unit
7 printer
8 ATG
9 ATG system

Figure B.1 — Example of radar-type ATG

In addition to the installation practice described in Clause 5, the following shall be considered:

a) the antenna shall be installed in a position such that the upper “dead zone” does not interfere with the accurate measurement of the liquid level when the level is near the normal safe fill height;

b) verification reference device(s) shall be provided to establish fixed reference points that equate to a precisely known distance from the gauge reference point to allow verification of the ATG;

c) provision shall be made to prevent adverse effects caused by signal echo from the tank bottom.

© ISO 2011 – All rights reserved

B.2 Factory acceptance test at the manufacturer's shop

See the calibration methods and procedures proposed by the ATG manufacturer. The ATG is tested at several points throughout the length of the still pipe. The ATG readings shall agree with the reference distances within the tolerance of the intrinsic error described in 6.2.2.

B.3 Calibration and verification after installation on board the vessel, but before being in service

See the specific procedure recommended by the ATG manufacturer. With the ATG installed:

a) activate the ATG to operate in the calibration/verification mode;

b) set the ATG to agree with the predetermined fixed reference point selected;

c) verify that the ATG readings agree with the reference value, i.e. they are within the error allowed in 6.3.

B.4 Verification before custody transfer operation

The verification process should involve comparison between the ATG reading(s) and fixed reference point(s), the position of which is known precisely. Depending on the ATG technology, verification should preferably be carried out near the normal fill height of the vessel cargo tanks with the tank in service, or by comparison at a reference point near the top or the bottom of the cargo tank.

© ISO 2011 – All rights reserved

Annex C
(normative)

Calibration and verification of magnetic-type ATG

C.1 General

Magnetic-type ATGs with a magnetic float level sensor (see Figure C.1) involves the opening or closing of magnetic switches assembled vertically in the guide pole, either through direct contact with the switch, or magnetic operation of a reed. With magnetically actuated float sensors, switching occurs when a permanent magnet sealed inside a float rises or falls to the actuation level. With a mechanically actuated float, switching occurs as a result of the movement of a float against a miniature (micro) switch. For both magnetic level sensors and mechanical float level sensors, chemical compatibility, temperature, density, buoyancy and viscosity affect the selection of the stem and the float.

© ISO 2011 – All rights reserved

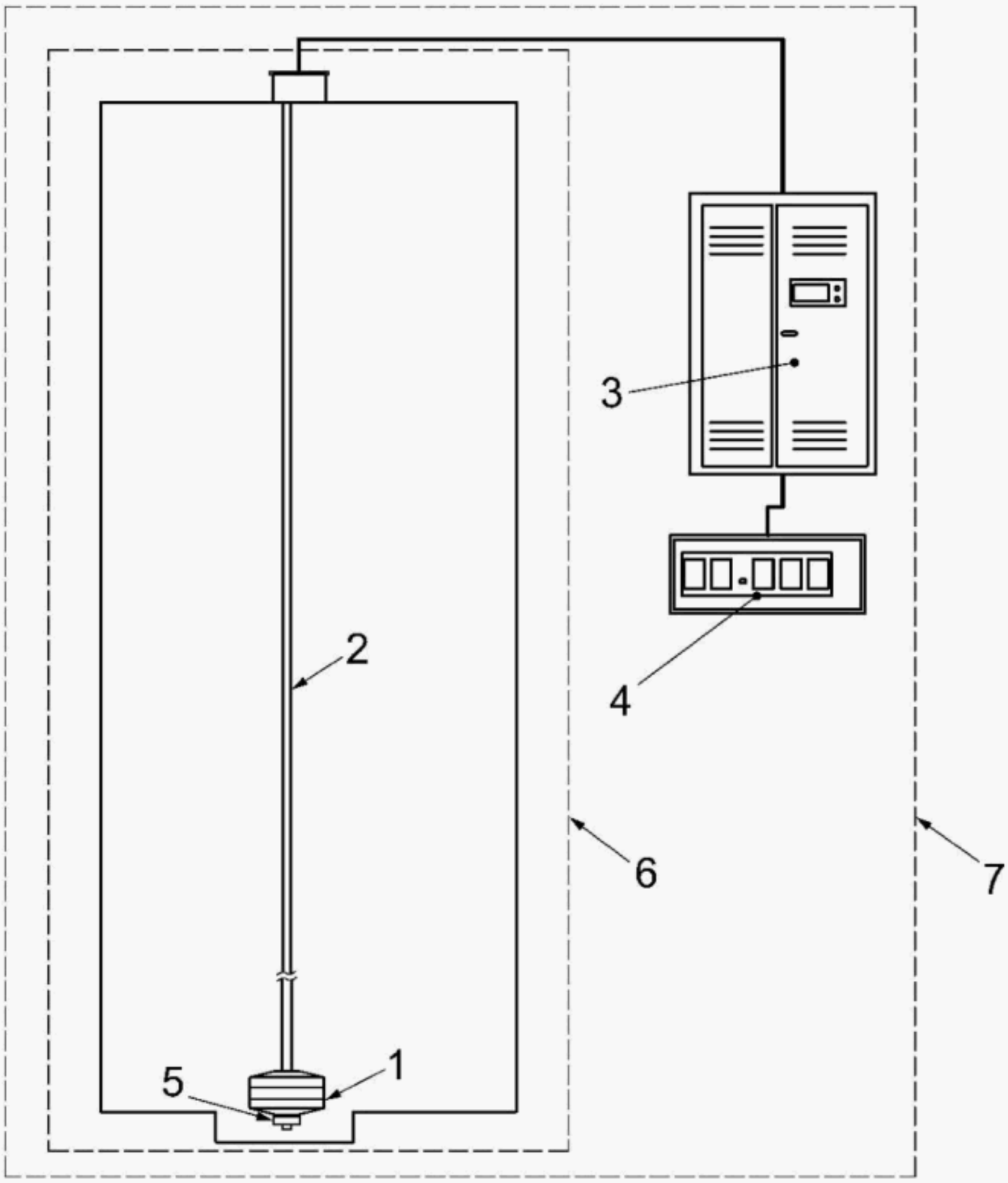

Key

1 float
2 float guide with read switch
3 control unit
4 display unit
5 float stopper
6 ATG
7 ATG system

Figure C.1 — Example of magnetic-type ATG

For magnetic-type ATGs of magneto-strictive type, a sonic strain pulse is induced in a specially designed magneto-strictive waveguide by the momentary interaction of two magnetic fields. One field comes from a movable permanent magnet which passes along the outside of the sensor tube (also serves as a guide pole), the other field comes from a current pulse or interrogation pulse applied along the waveguide. The interaction of the two magnetic fields produces a strain pulse, which travels at sonic speed along the waveguide until the pulse is detected at the head of the sensor. The position of the magnet is determined by measuring the elapsed time between the application of the interrogation pulse and the arrival of the resulting strain pulse.

Larger floats should be used with liquefied petroleum gases which typically have density as low as 0,5 kg/l while still maintaining buoyancy. The choice of float material is also influenced by temperature-induced changes in density and viscosity, which are changes that directly affect buoyancy. In order to correct the reading of the ATG for changes in the immersion level of the float, the density of the liquid at the operating temperature shall be known.

© ISO 2011 – All rights reserved

Magnetic-float and magneto-strictive ATGs may incorporate temperature and pressure sensors in the float or the sensor tube (guide pole), to provide a spot and/or multiple spot measurement of these parameters. The accuracy of the temperature and pressure thus measured shall be verified to meet the respective performance requirements for custody transfer application, as they are used to determine the average liquid temperature, the vapour temperature and the hydrostatic pressure.

Correction tables, formulae or other suitable means shall be provided to compensate for the change of the float immersion due to change of liquid density.

The float tube (guide pole) and float shall be designed and installed to withstand damage caused by waves in the tanks due to ship movement.

C.2 Factory acceptance test at the manufacturer's shop

See the specific procedure recommended by the ATG manufacturer. The magnetic-type ATG shall be calibrated and the accuracy verified at the manufacturer's shop prior to shipment, such that it meets the intrinsic error specified in 6.3 a).

C.3 Installation in tank on board the vessel

Follow the manufacturer's recommendations for installation.

C.4 Calibration after installation on board the vessel, but before in service

Calibration at the shipyard typically consists of two steps: setting the ATG and verifying its accuracy after setting. See the specific procedure recommended by the ATG manufacturer.

a) Setting of magnetic-type ATG:

   1) Lower the level sensing element (i.e. float) to the lowest point of the support/guide pole or stopper (or the lower reference point).

   2) Set the ATG reading to agree with the predetermined reference point.

   3) Raise the level sensing element back to the upper reference point and compare the ATG readings at least every 2 m against a reference tape or other calibration reference. Record the readings. The difference between the ATG readings and the reference readings should be within 10 mm over the entire range.

   4) Lower the level sensing element to the datum plate (or the lower reference point) and confirm the ATG reading to agree with the predetermined reference point as established by point 2) above.

b) Verification of magnetic-type ATG after setting:

   1) The magnetic-type ATG shall be operated and verified, at 20 % and 80 % of its working range, by comparison against the certified reference such as certified measuring tape.

   2) The result shall be within the tolerance given in 6.3 b).

c) If this method is not feasible, an alternative test method of equivalent function or performance may be adopted.

C.5 Verification before custody transfer operation

Follow the manufacturer's recommendations.

© ISO 2011 – All rights reserved

Annex D
(normative)

Calibration and verification of float-type ATG

D.1 General

A float-type ATG includes a float, a drum at the gauge head on the deck and a tape or wire that connects the float and the drum. As the float reaches the liquid surface and partly immerses, change of the buoyancy force on the float allows detection of the liquid surface. Correction tables shall be provided to compensate for the change of the float immersion due to change of liquid density and shrinkage of the tape or wire of the float due to change of the vapour temperature.

Float-type ATGs shall be designed to withstand damage caused by waves in the tanks due to ship movement. The protection for this purpose may require installation of the float in a perforated still pipe. The float shall be raised to a top storage position when it is not used.

Float-type ATGs typically include the following components (see Figure D.1):

a) float that follows the vertical movement of liquid level in the tank;

b) tape or wire attached to the float in order to measure its position;

c) still pipe, if any, to prevent horizontal movement of the float;

d) mechanical, electrical or electromechanical equipment for local and/or remote readout;

e) equipment to provide necessary tension to the tape or wire;

f) equipment to wind the float up and down;

g) equipment or apparatus to lock the float in position while it is not in use;

h) adequate provision in the tank to protect the tank bottom from damage by striking with a float.

© ISO 2011 – All rights reserved

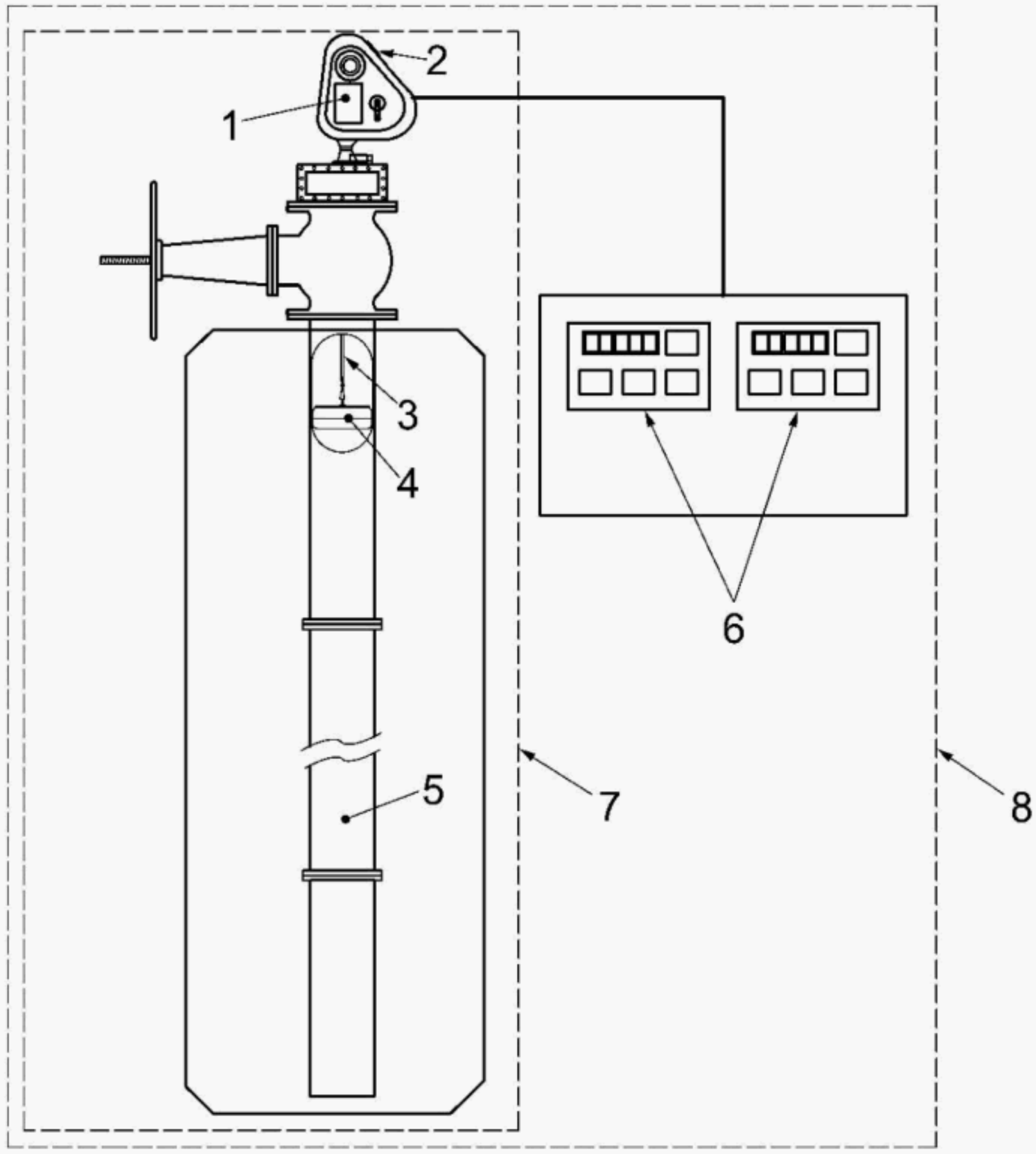

Key

1 gauge head
2 local display
3 float tape
4 float
5 still pipe
6 remote display
7 ATG
8 ATG system

Figure D.1 — Example of float-type ATG

D.2 Factory acceptance test

Float-type ATGs shall be calibrated and their accuracy verified at the manufacturer's shop prior to the shipment, in order to establish the intrinsic error as specified in 6.3 a).

The following shall be measured or checked during the factory acceptance test:

a) dimensions of the float;

b) mass of the float itself;

c) immersion level of the float;

© ISO 2011 – All rights reserved

d) in the case of perforated tape, the pitch of the perforation;

e) length of the suspending tape or wire;

f) mass per unit length of the suspending tape or wire;

g) material of the suspending tape or wire;

h) function of constant tensioning spring;

i) proper centering of float at which tape or wire is connected.

See the specific procedure recommended by the ATG manufacturer.

D.3 Calibration and verification at the shipyard after installation on board the vessel

Calibration and verification shall be carried out as described below.

a) Lower the float to the datum plate.

b) Set the ATG reading on local and remote display to agree with the sum of H and h, such that

— H is the vertical distance between tank bottom and top surface of datum plate or stopper;

— h is the calculated immersion level of the float when it is buoyant on assumed LNG density.

c) Attach a certified calibration tape at the bottom of float with a jig. Wind up the float slowly by rotating the handle at gauge head until the display indicates 1 m. Read the measurement of the attached tape as the offset of measurement.

d) Wind up the float by the handle to approximately 20 % of tank height.

e) Hold the handle and compare the measurement of the attached tape and that of the local display taking the offset into account.

f) Wind up the float to 80 % of tank height. Repeat e).

g) Wind up the float until it stops at the top storage position. Record the indication of local display as the top reference point.

h) Lower the float to the tank bottom to detach the calibration tape.

i) From each reading, calculate the error of the float-type ATG both for local and remote displays. The result shall be within the tolerance given in 6.3 b).

NOTE 1 It is advisable to check the tape or wire, gauge head, and all components of a float-type ATG by winding the tape or cable through the entire range to assure smooth operation, doing the check slowly to simulate actual operation and to avoid damaging the float-type ATG.

NOTE 2 In-tank atmospheric temperature is measured for the compensation of the calibration tape.

NOTE 3 If the above method is not feasible, an alternative test method of equivalent function or performance can be adopted.

NOTE 4 In addition to the calibration uncertainty involved in the certified calibration tape (working standard), the above test procedure involves uncertainty due mainly to manual operation. The total uncertainty associated with the accuracy test of a float-type ATG is estimated to be ±2 mm (see Annex G for details).

D.4 Verification before custody transfer measurement

The float that has been stored in the top housing during transportation to avoid damage due to the ship's motion is lowered onto a liquid surface in order to stabilize the temperature. Before custody transfer measurement, wind up the float until it stops automatically at the top storage position and compare the readings of local and remote displays with the record at the time of initial calibration.

© ISO 2011 – All rights reserved

Annex E
(normative)

Calibration and verification of hydrostatic-type ATG

E.1 General

A hydrostatic-type ATG (see Figure E.1) typically includes three or more pressure sensors, and temperature sensors. One of the pressure sensors is located in the vapour phase to measure the vapour pressure. The sensors of hydrostatic-type ATGs shall be designed to withstand damage caused by waves in the tanks due to ship movement.

NOTE The level computed by a hydrostatic-type ATG can be affected by density stratification and temperature stratification of the cargo (liquid) in the tank.

© ISO 2011 – All rights reserved

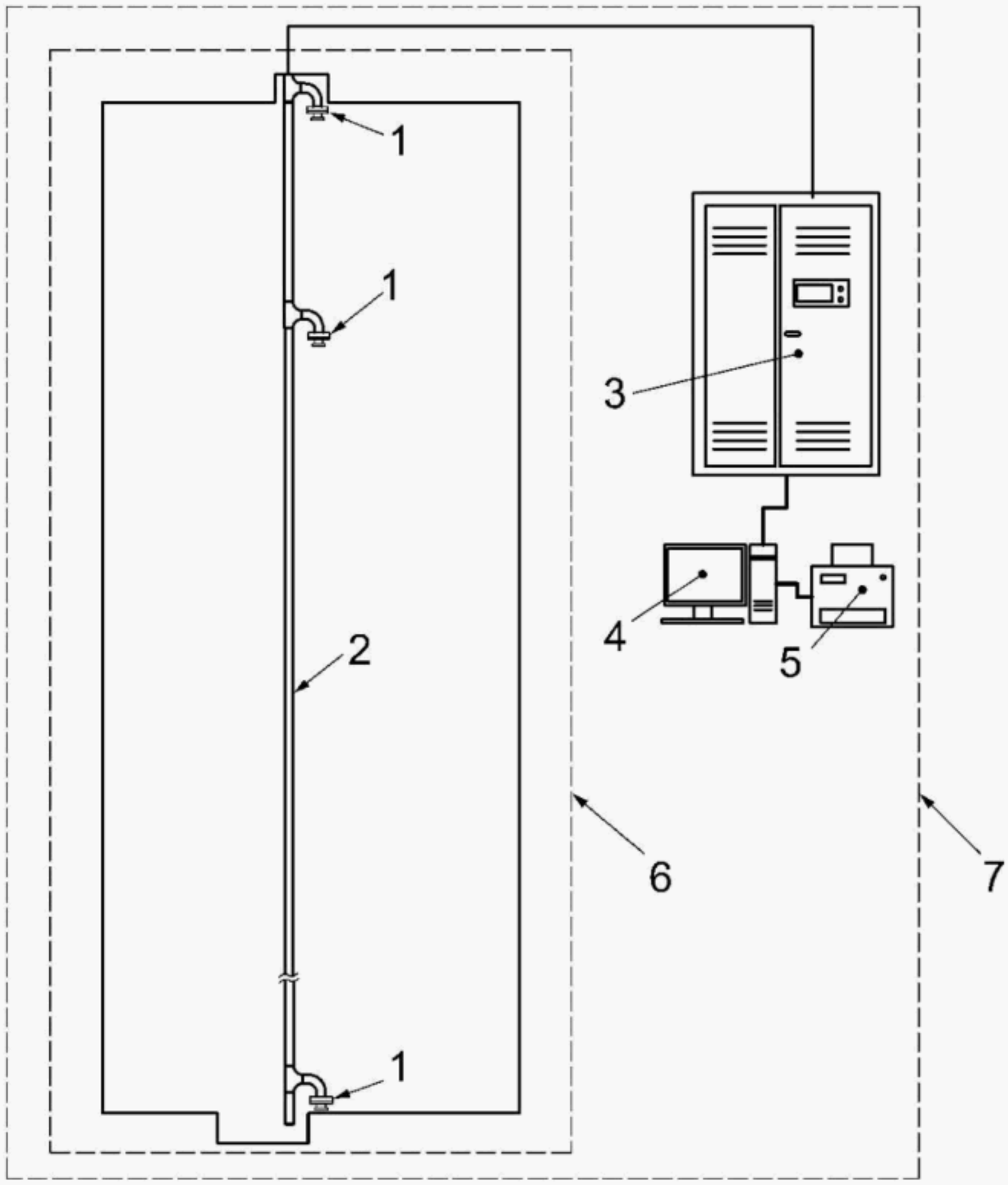

Key

1 pressure sensor
2 support pipe
3 control unit
4 display unit
5 printer
6 ATG
7 ATG system

Figure E.1 — Example of hydrostatic-type ATG

Correction tables, formulae or other suitable means shall be provided to compensate for the change of the pressure sensor locations due to thermal contraction of the still/support pipe on which the pressure sensors are mounted.

A direct ullage level gauge may be added to the hydrostatic tank gauge to form a hybrid tank measurement system. See ISO 15169 for the principle of operations.

E.2 Factory acceptance test at the manufacturer's shop

See the specific calibration procedure recommended by the hydrostatic-type ATG manufacturer. The pressure sensors of hydrostatic-type ATGs shall be fully calibrated at the manufacturer's testing facilities or outside

© ISO 2011 – All rights reserved

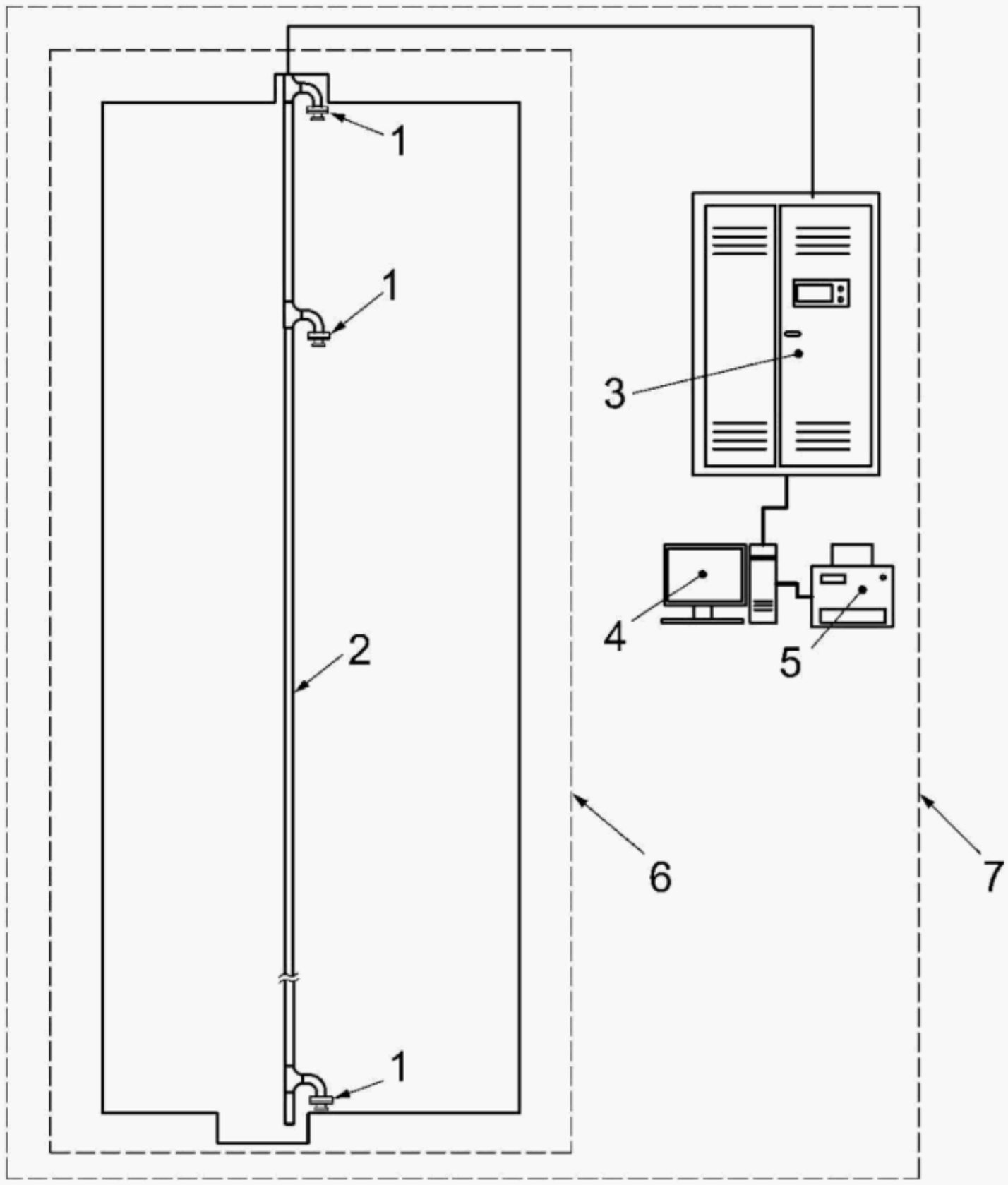

Key

1 pressure sensor
2 support pipe
3 control unit
4 display unit
5 printer
6 ATG
7 ATG system

Figure E.1 — Example of hydrostatic-type ATG

Correction tables, formulae or other suitable means shall be provided to compensate for the change of the pressure sensor locations due to thermal contraction of the still/support pipe on which the pressure sensors are mounted.

A direct ullage level gauge may be added to the hydrostatic tank gauge to form a hybrid tank measurement system. See ISO 15169 for the principle of operations.

E.2 Factory acceptance test at the manufacturer's shop

See the specific calibration procedure recommended by the hydrostatic-type ATG manufacturer. The pressure sensors of hydrostatic-type ATGs shall be fully calibrated at the manufacturer's testing facilities or outside

© ISO 2011 – All rights reserved

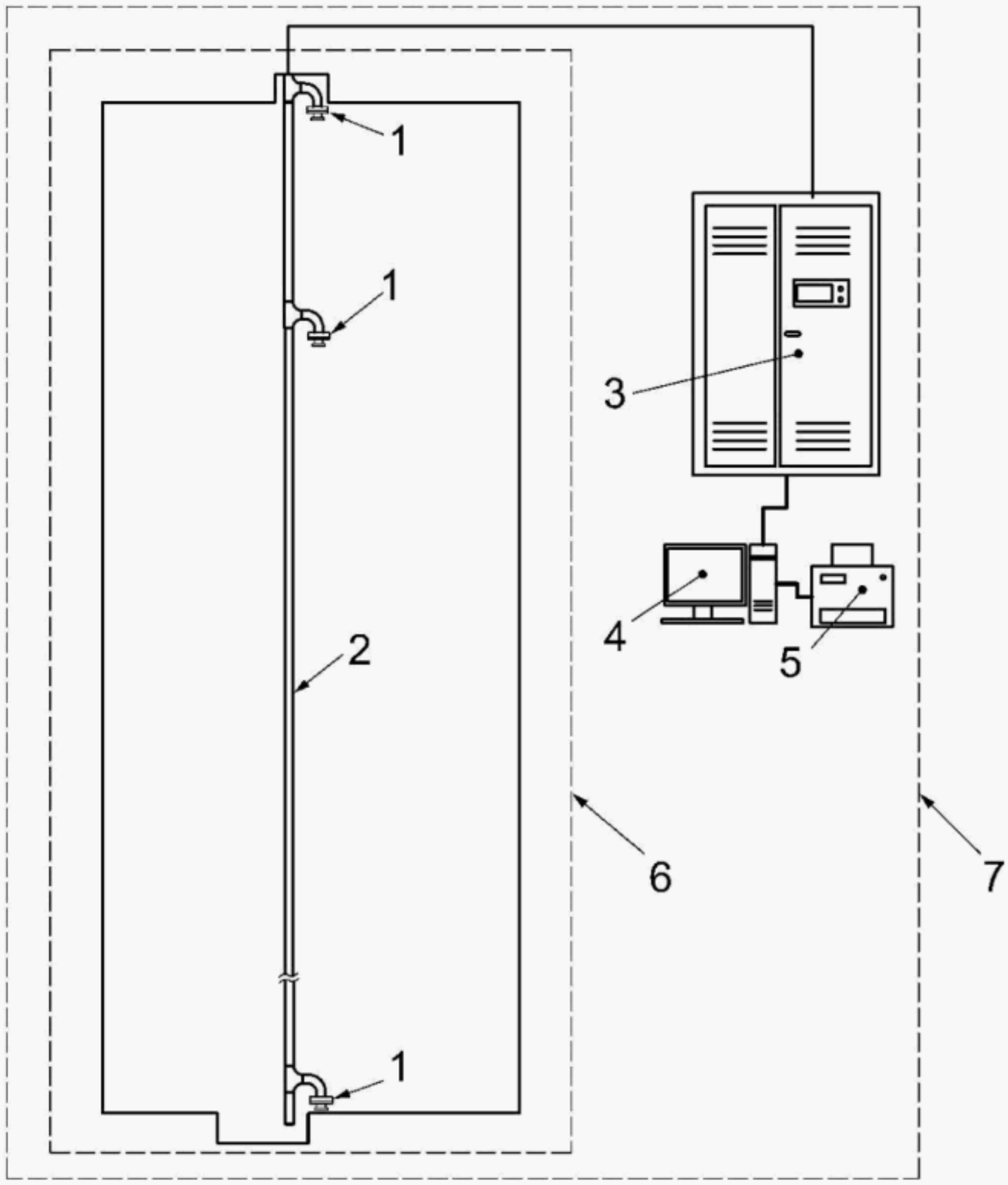

Key

1 pressure sensor
2 support pipe
3 control unit
4 display unit
5 printer
6 ATG
7 ATG system

Figure E.1 — Example of hydrostatic-type ATG

Correction tables, formulae or other suitable means shall be provided to compensate for the change of the pressure sensor locations due to thermal contraction of the still/support pipe on which the pressure sensors are mounted.

A direct ullage level gauge may be added to the hydrostatic tank gauge to form a hybrid tank measurement system. See ISO 15169 for the principle of operations.

E.2 Factory acceptance test at the manufacturer's shop

See the specific calibration procedure recommended by the hydrostatic-type ATG manufacturer. The pressure sensors of hydrostatic-type ATGs shall be fully calibrated at the manufacturer's testing facilities or outside

© ISO 2011 – All rights reserved

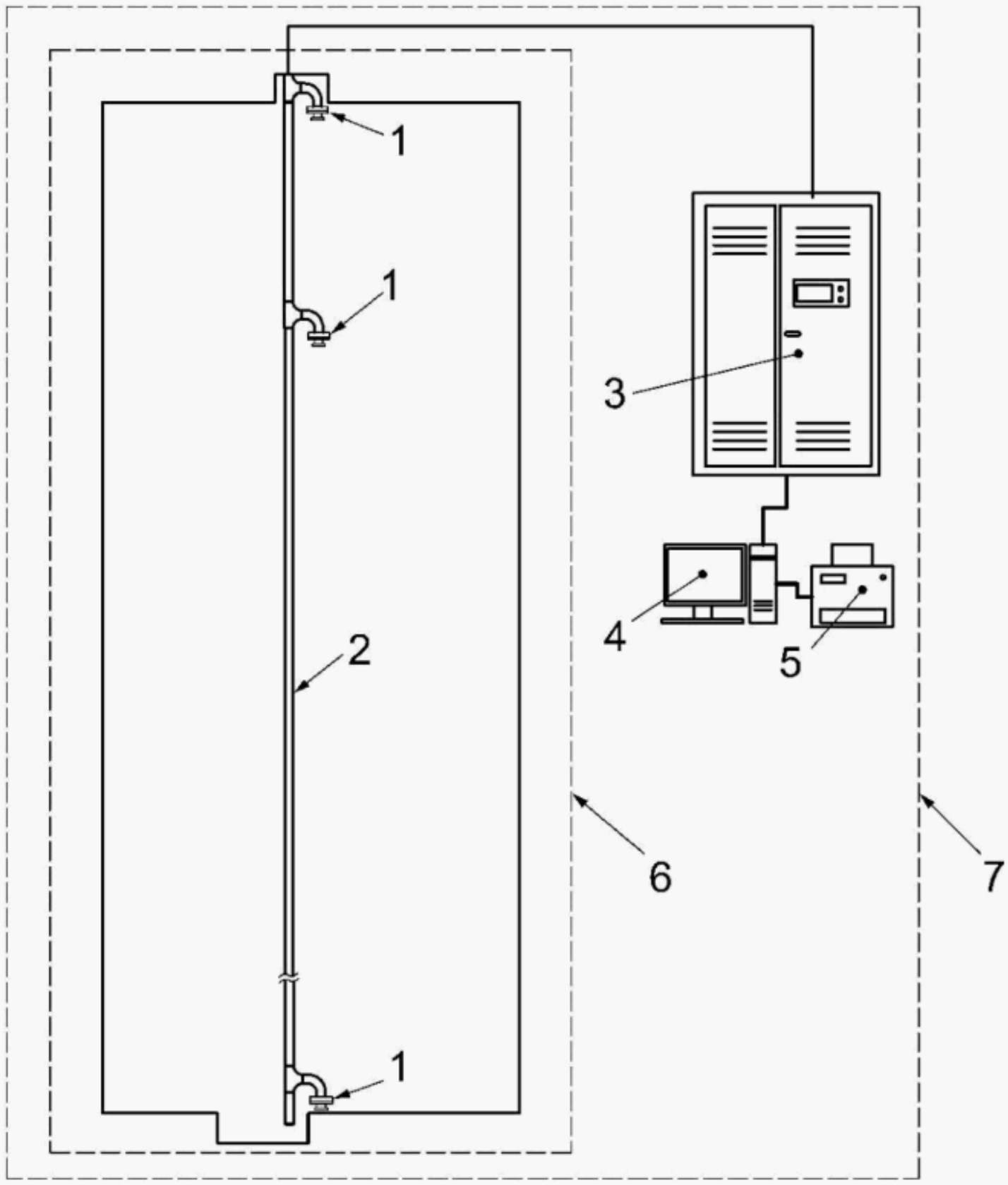

Key

1 pressure sensor
2 support pipe
3 control unit
4 display unit
5 printer
6 ATG
7 ATG system

Figure E.1 — Example of hydrostatic-type ATG

Correction tables, formulae or other suitable means shall be provided to compensate for the change of the pressure sensor locations due to thermal contraction of the still/support pipe on which the pressure sensors are mounted.

A direct ullage level gauge may be added to the hydrostatic tank gauge to form a hybrid tank measurement system. See ISO 15169 for the principle of operations.

E.2 Factory acceptance test at the manufacturer's shop

See the specific calibration procedure recommended by the hydrostatic-type ATG manufacturer. The pressure sensors of hydrostatic-type ATGs shall be fully calibrated at the manufacturer's testing facilities or outside

© ISO 2011 – All rights reserved

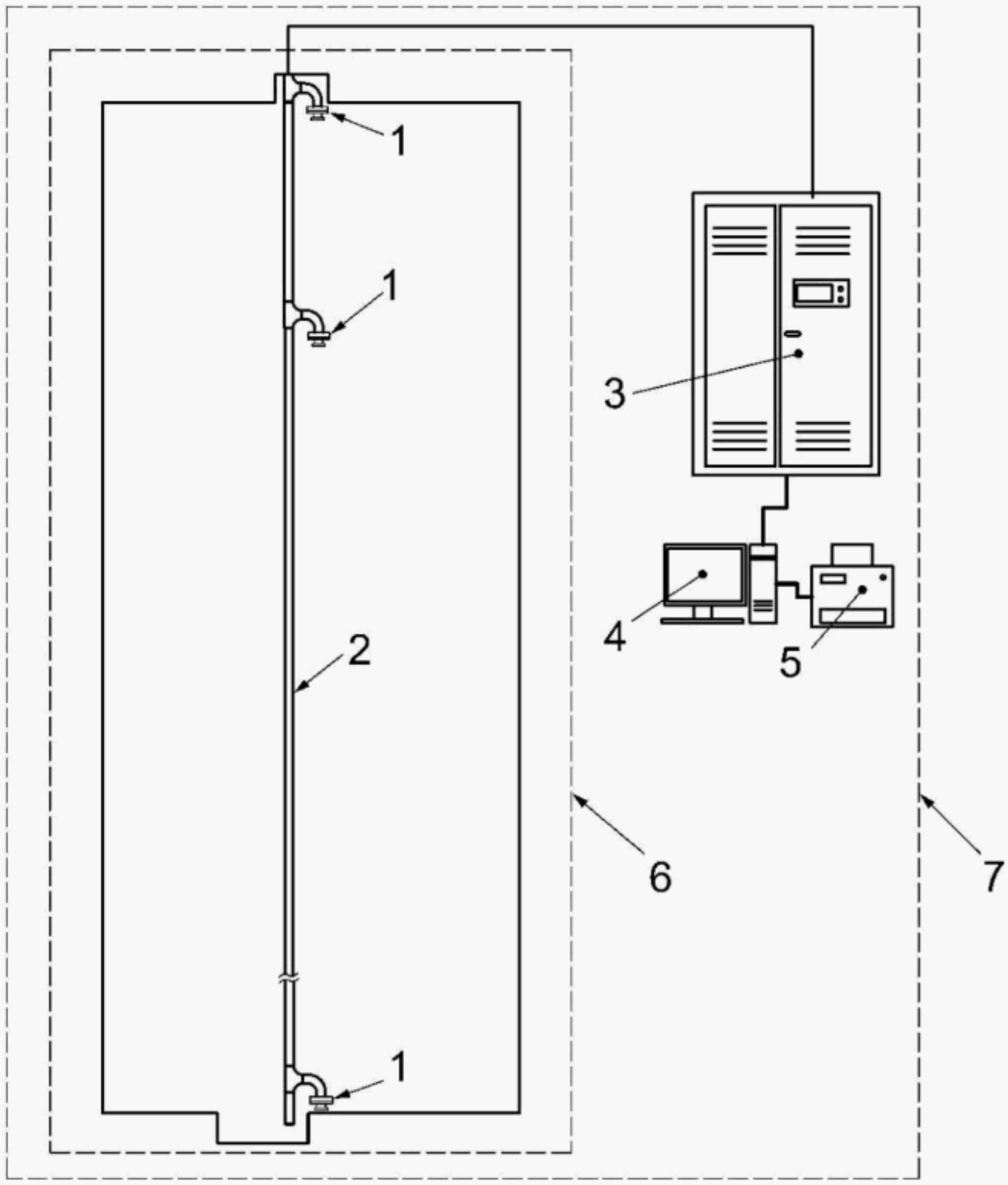

Key

1 pressure sensor
2 support pipe
3 control unit
4 display unit
5 printer
6 ATG
7 ATG system

Figure E.1 — Example of hydrostatic-type ATG

Correction tables, formulae or other suitable means shall be provided to compensate for the change of the pressure sensor locations due to thermal contraction of the still/support pipe on which the pressure sensors are mounted.

A direct ullage level gauge may be added to the hydrostatic tank gauge to form a hybrid tank measurement system. See ISO 15169 for the principle of operations.

E.2 Factory acceptance test at the manufacturer's shop

See the specific calibration procedure recommended by the hydrostatic-type ATG manufacturer. The pressure sensors of hydrostatic-type ATGs shall be fully calibrated at the manufacturer's testing facilities or outside

© ISO 2011 – All rights reserved

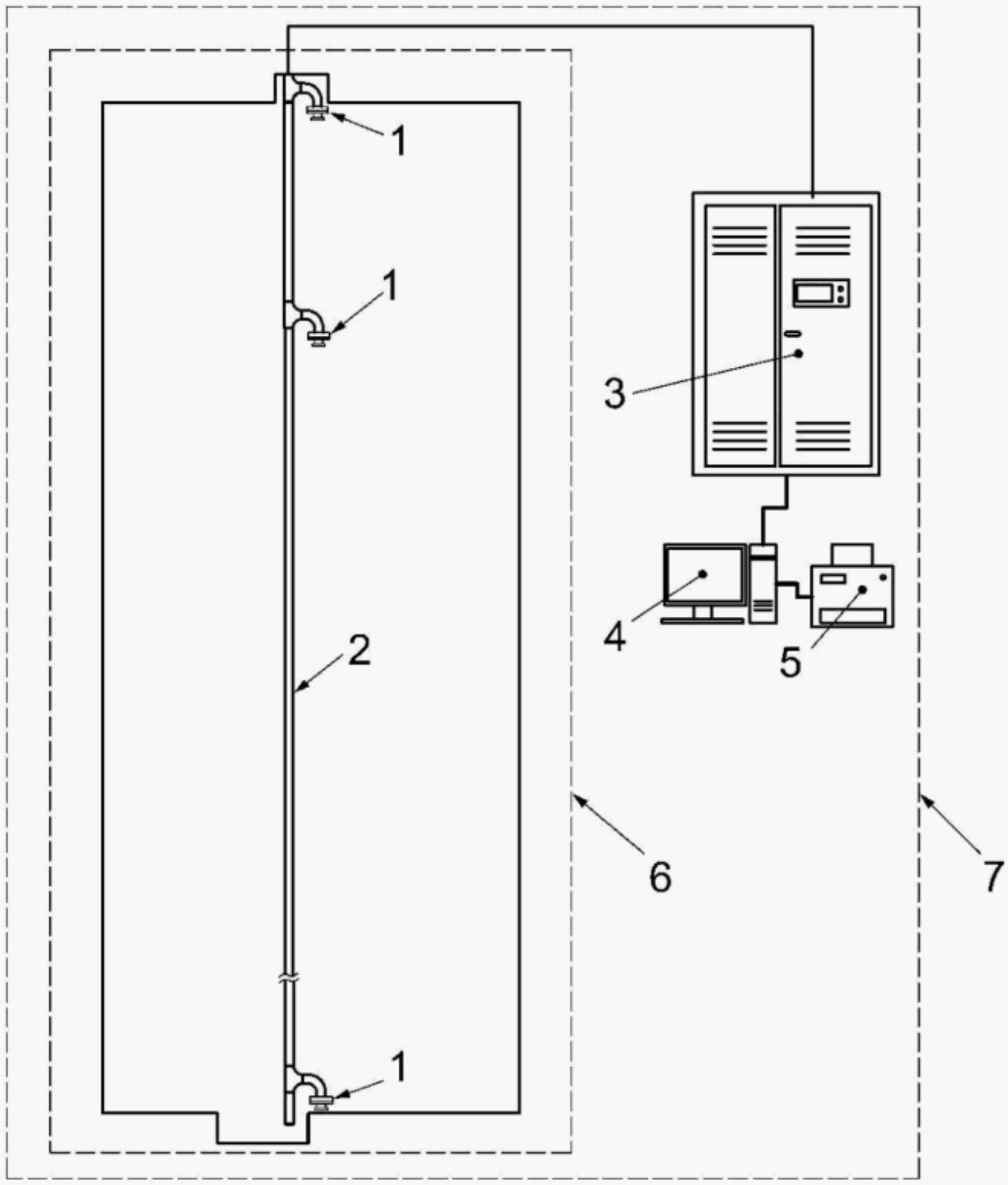

Key

1 pressure sensor
2 support pipe
3 control unit
4 display unit
5 printer
6 ATG
7 ATG system

Figure E.1 — Example of hydrostatic-type ATG

Correction tables, formulae or other suitable means shall be provided to compensate for the change of the pressure sensor locations due to thermal contraction of the still/support pipe on which the pressure sensors are mounted.

A direct ullage level gauge may be added to the hydrostatic tank gauge to form a hybrid tank measurement system. See ISO 15169 for the principle of operations.

E.2 Factory acceptance test at the manufacturer's shop

See the specific calibration procedure recommended by the hydrostatic-type ATG manufacturer. The pressure sensors of hydrostatic-type ATGs shall be fully calibrated at the manufacturer's testing facilities or outside

© ISO 2011 – All rights reserved

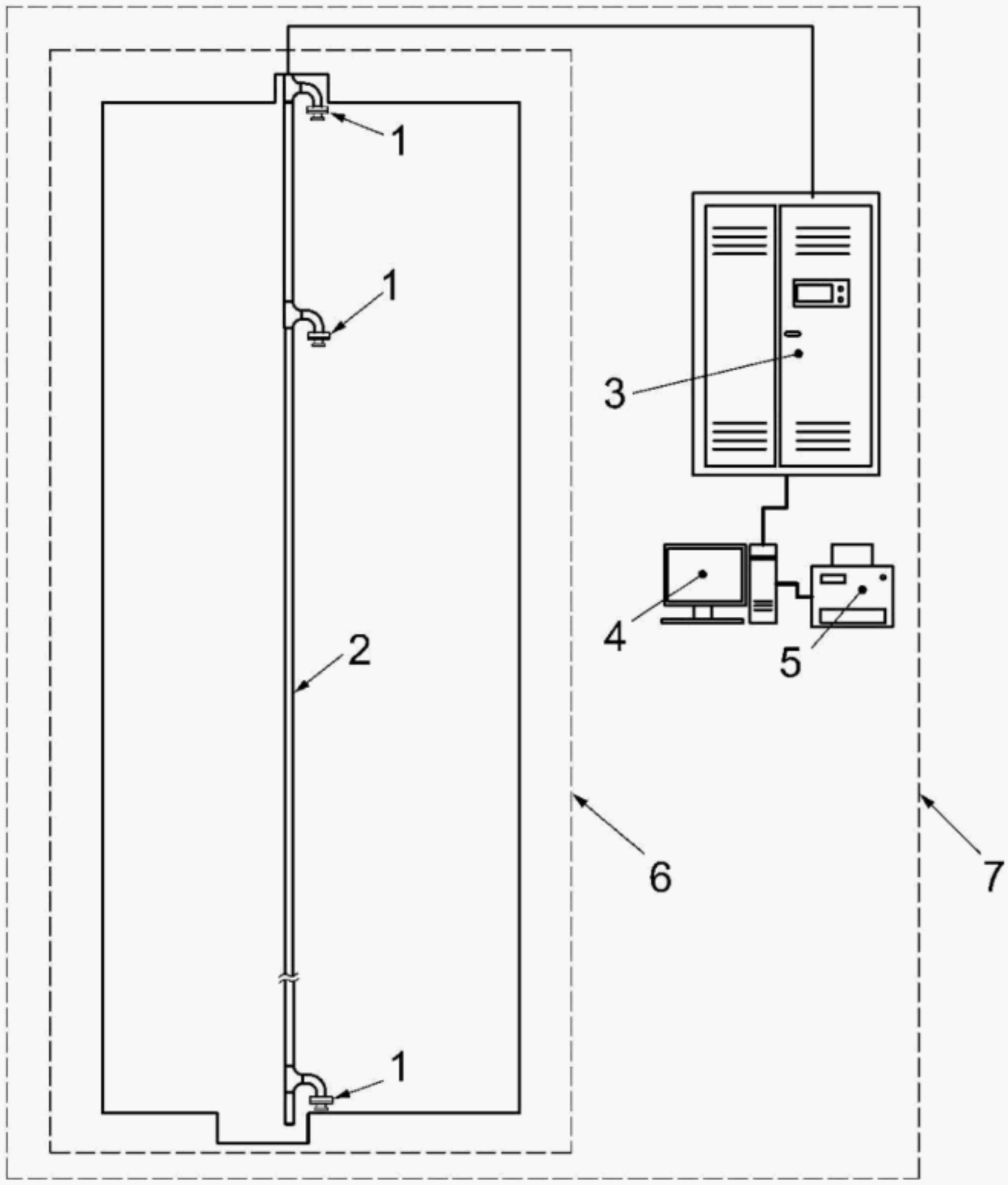

Key

1 pressure sensor
2 support pipe
3 control unit
4 display unit
5 printer
6 ATG
7 ATG system

Figure E.1 — Example of hydrostatic-type ATG

Correction tables, formulae or other suitable means shall be provided to compensate for the change of the pressure sensor locations due to thermal contraction of the still/support pipe on which the pressure sensors are mounted.

A direct ullage level gauge may be added to the hydrostatic tank gauge to form a hybrid tank measurement system. See ISO 15169 for the principle of operations.

E.2 Factory acceptance test at the manufacturer's shop

See the specific calibration procedure recommended by the hydrostatic-type ATG manufacturer. The pressure sensors of hydrostatic-type ATGs shall be fully calibrated at the manufacturer's testing facilities or outside

© ISO 2011 – All rights reserved

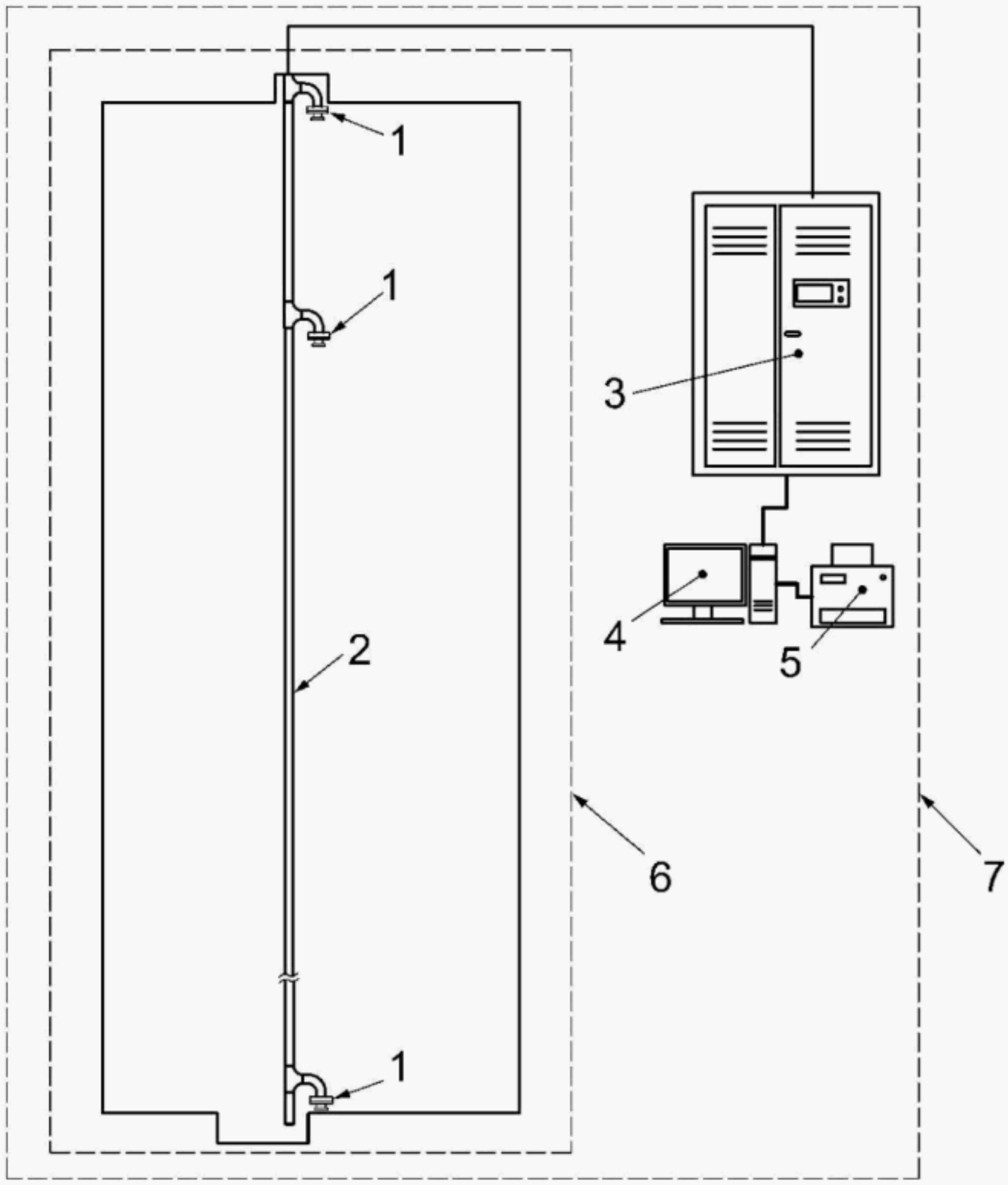

Key

1 pressure sensor
2 support pipe
3 control unit
4 display unit
5 printer
6 ATG
7 ATG system

Figure E.1 — Example of hydrostatic-type ATG

Correction tables, formulae or other suitable means shall be provided to compensate for the change of the pressure sensor locations due to thermal contraction of the still/support pipe on which the pressure sensors are mounted.

A direct ullage level gauge may be added to the hydrostatic tank gauge to form a hybrid tank measurement system. See ISO 15169 for the principle of operations.

E.2 Factory acceptance test at the manufacturer's shop

See the specific calibration procedure recommended by the hydrostatic-type ATG manufacturer. The pressure sensors of hydrostatic-type ATGs shall be fully calibrated at the manufacturer's testing facilities or outside

© ISO 2011 – All rights reserved

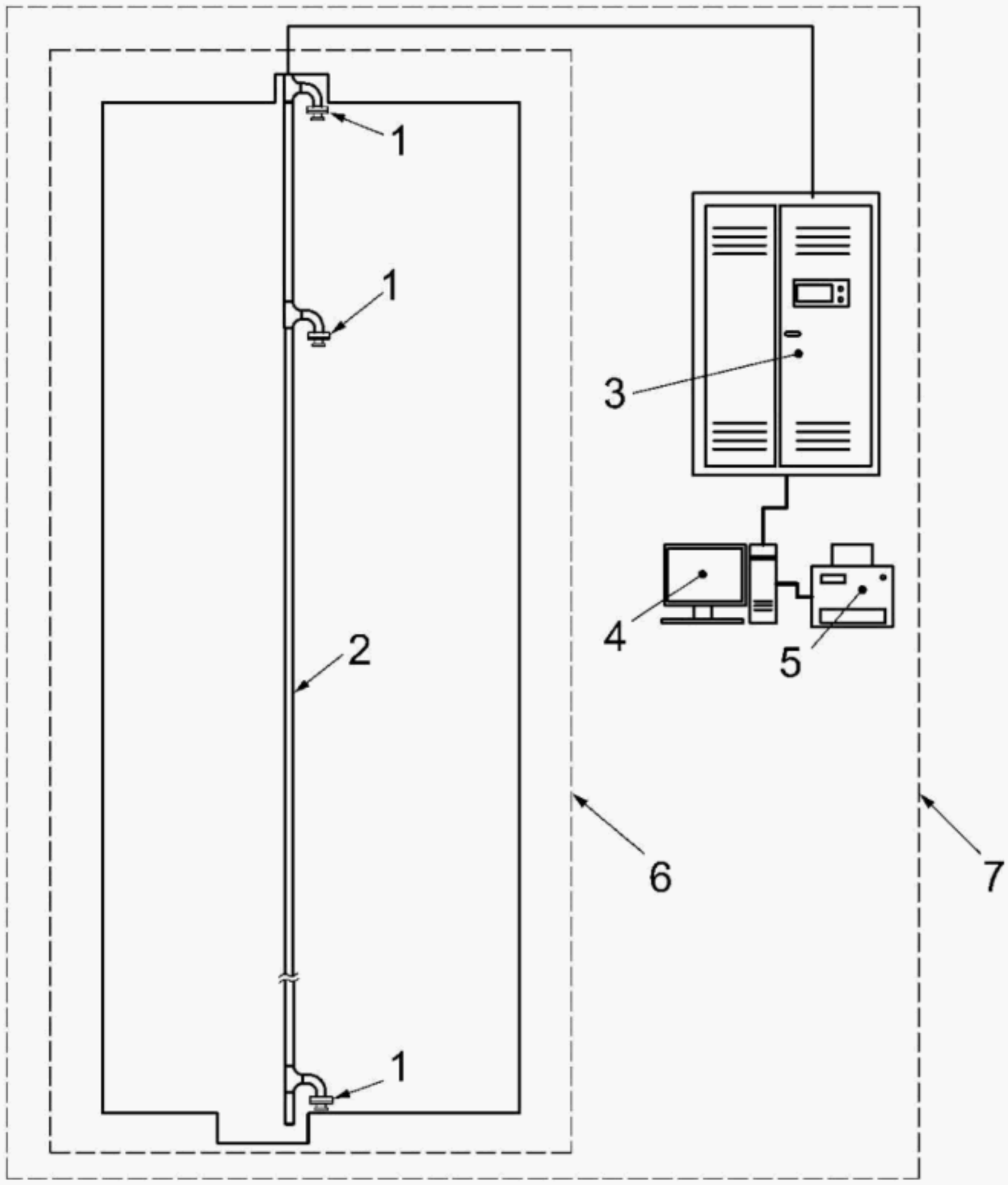

Key

1 pressure sensor
2 support pipe
3 control unit
4 display unit
5 printer
6 ATG
7 ATG system

Figure E.1 — Example of hydrostatic-type ATG

Correction tables, formulae or other suitable means shall be provided to compensate for the change of the pressure sensor locations due to thermal contraction of the still/support pipe on which the pressure sensors are mounted.

A direct ullage level gauge may be added to the hydrostatic tank gauge to form a hybrid tank measurement system. See ISO 15169 for the principle of operations.

E.2 Factory acceptance test at the manufacturer's shop

See the specific calibration procedure recommended by the hydrostatic-type ATG manufacturer. The pressure sensors of hydrostatic-type ATGs shall be fully calibrated at the manufacturer's testing facilities or outside

© ISO 2011 – All rights reserved