BRITISH STANDARD

BS EN ISO 19953:2004

Footwear — Test methods for heels — Resistance to lateral impact

The European Standard EN ISO 19953:2004 has the status of a British Standard

ICS 61.060

NO COPYING WITHOUT BSI PERMISSION EXCEPT AS PERMITTED BY COPYRIGHT LAW

British Standards

National foreword

This British Standard is the official English language version of EN ISO 19953:2004. It is identical with ISO 19953:2004

The UK participation in its preparation was entrusted to Technical Committee TCI/69, Footwear and leather, which has the responsibility to:

— aid enquirers to understand the text;

— present to the responsible international/European committee any enquiries on the interpretation, or proposals for change, and keep the UK interests informed;

— monitor related international and European developments and promulgate them in the UK.

A list of organizations represented on this committee can be obtained on request to its secretary.

Cross-references

The British Standards which implement international or European publications referred to in this document may be found in the *BSI Catalogue* under the section entitled "International Standards Correspondence Index", or by using the "Search" facility of the *BSI Electronic Catalogue* or of British Standards Online.

This publication does not purport to include all the necessary provisions of a contract. Users are responsible for its correct application.

Compliance with a British Standard does not of itself confer immunity from legal obligations.

This British Standard was published under the authority of the Standards Policy and Strategy Committee on 2 August 2004

Summary of pages

This document comprises a front cover, an inside front cover, the EN ISO title page, pages 2 to 7 and a back cover.

The BSI copyright notice displayed in this document indicates when the document was last issued.

Amendments issued since publication

Amd. No.	Date	Comments

© BSI 2 August 2004

ISBN 0 580 44186 5

EUROPEAN STANDARD

NORME EUROPÉENNE

EUROPÄISCHE NORM

EN ISO 19953

July 2004

ICS 61.060

English version

Footwear - Test methods for heels - Resistance to lateral impact (ISO 19953:2004)

Chaussures - Méthodes d'essai relatives aux talons - Résistance aux chocs latéraux (ISO 19953:2004)

Schuhe - Prüfverfahren für Absätze - Widerstand gegen seitlichen Schlag (ISO 19953:2004)

This European Standard was approved by CEN on 10 December 2003.

CEN members are bound to comply with the CEN/CENELEC Internal Regulations which stipulate the conditions for giving this European Standard the status of a national standard without any alteration. Up-to-date lists and bibliographical references concerning such national standards may be obtained on application to the Central Secretariat or to any CEN member.

This European Standard exists in three official versions (English, French, German). A version in any other language made by translation under the responsibility of a CEN member into its own language and notified to the Central Secretariat has the same status as the official versions.

CEN members are the national standards bodies of Austria, Belgium, Cyprus, Czech Republic, Denmark, Estonia, Finland, France, Germany, Greece, Hungary, Iceland, Ireland, Italy, Latvia, Lithuania, Luxembourg, Malta, Netherlands, Norway, Poland, Portugal, Slovakia, Slovenia, Spain, Sweden, Switzerland and United Kingdom.

EUROPEAN COMMITTEE FOR STANDARDIZATION
COMITÉ EUROPÉEN DE NORMALISATION
EUROPÄISCHES KOMITEE FÜR NORMUNG

Management Centre: rue de Stassart, 36 B-1050 Brussels

© 2004 CEN All rights of exploitation in any form and by any means reserved worldwide for CEN national Members.

Ref. No. EN ISO 19953:2004: E

Contents

page

Foreword 3

1 Scope 4

2 Apparatus and material 4
2.1 General 4
2.2 Lateral impact tester 4
2.3 Metal mounting trays 6
2.4 Metal alloy 6

3 Sampling and conditioning 6

4 Test method 6
4.1 Principle 6
4.2 Procedure 7

5 Expression of results 7

6 Test report 7

Foreword

This document (EN ISO 19953:2004) has been prepared by Technical Committee CEN /TC 309, "Footwear", the secretariat of which is held by AENOR, in collaboration with ISO/TC 216 "Footwear".

This European Standard shall be given the status of a national standard, either by publication of an identical text or by endorsement, at the latest by January 2005, and conflicting national standards shall be withdrawn at the latest by January 2005.

According to the CEN/CENELEC Internal Regulations, the national standards organizations of the following countries are bound to implement this European Standard: Austria, Belgium, Cyprus, Czech Republic, Denmark, Estonia, Finland, France, Germany, Greece, Hungary, Iceland, Ireland, Italy, Latvia, Lithuania, Luxembourg, Malta, Netherlands, Norway, Poland, Portugal, Slovakia, Slovenia, Spain, Sweden, Switzerland and United Kingdom.

1 Scope

This European Standard specifies a test method for determining the impact strength of the heels of ladies' shoes. The result provides an assessment of the liability to failure under the occasional heavy blows received during wear.

NOTE While the test method is applicable to all types of high heels, of whatever construction, it is particularly useful for injection-moulded plastics heels which incorporate a steel dowel reinforcement, giving information on the suitability of the dowels' hardness or softness. Normally, heels which by virtue of their shape have a high lateral impact resistance do not need to be tested in this way.

2 Apparatus and material

2.1 General

The following apparatus and material shall be used.

2.2 Lateral impact tester

2.2.1 General

An example of a suitable apparatus is being shown in Figure 1. The apparatus is clamped either onto a solid built-in bench, or onto a rigid free-standing frame anchored to the floor.

The lateral impact tester shall include the following.

2.2.2 Pendulum, consisting of a circular steel bob of diameter (108 ± 1) mm and thickness (49 ± 2) mm, which is fixed by a circular steel shaft of diameter (25 ± 0,5) mm to a hub, on the bearing axle of diameter (75 ± 1) mm. The distance from the centre of the bob to the centre of the hub is (432 ± 2) mm. The moment of the pendulum when it is held horizontally is (17,3 ± 0,2) N·m.

2.2.3 Striker head, consisting of a strip of metal (6,0 ± 0,5) mm thick, (25,0 ± 0,5) mm wide and (35 ± 2) mm long with the striking edge rounded to a radius of (3,0 ± 0,5) mm. The head is fixed rigidly to the pendulum bob so that the striker tip and centre of the bob lie on the same circle of swing of the pendulum and are (89 ± 2) mm apart.

2.2.4 Energy scale for the pendulum, calibrated in increment of 0,68 J, from 0 J to 18,3 J. A marker attached to the pendulum moves over this scale and enables the pendulum to be set up to the desired energy of blow.

2.2.5 Base clamp, for holding the metal mounting tray (3.2) and for adjusting it vertically and horizontally to achieve correct allignment of the heel tip.

NOTE If the apparatus is not firmly mounted there is partial loss of energy on impact, thereby producing false results.

Dimensions in millimetres

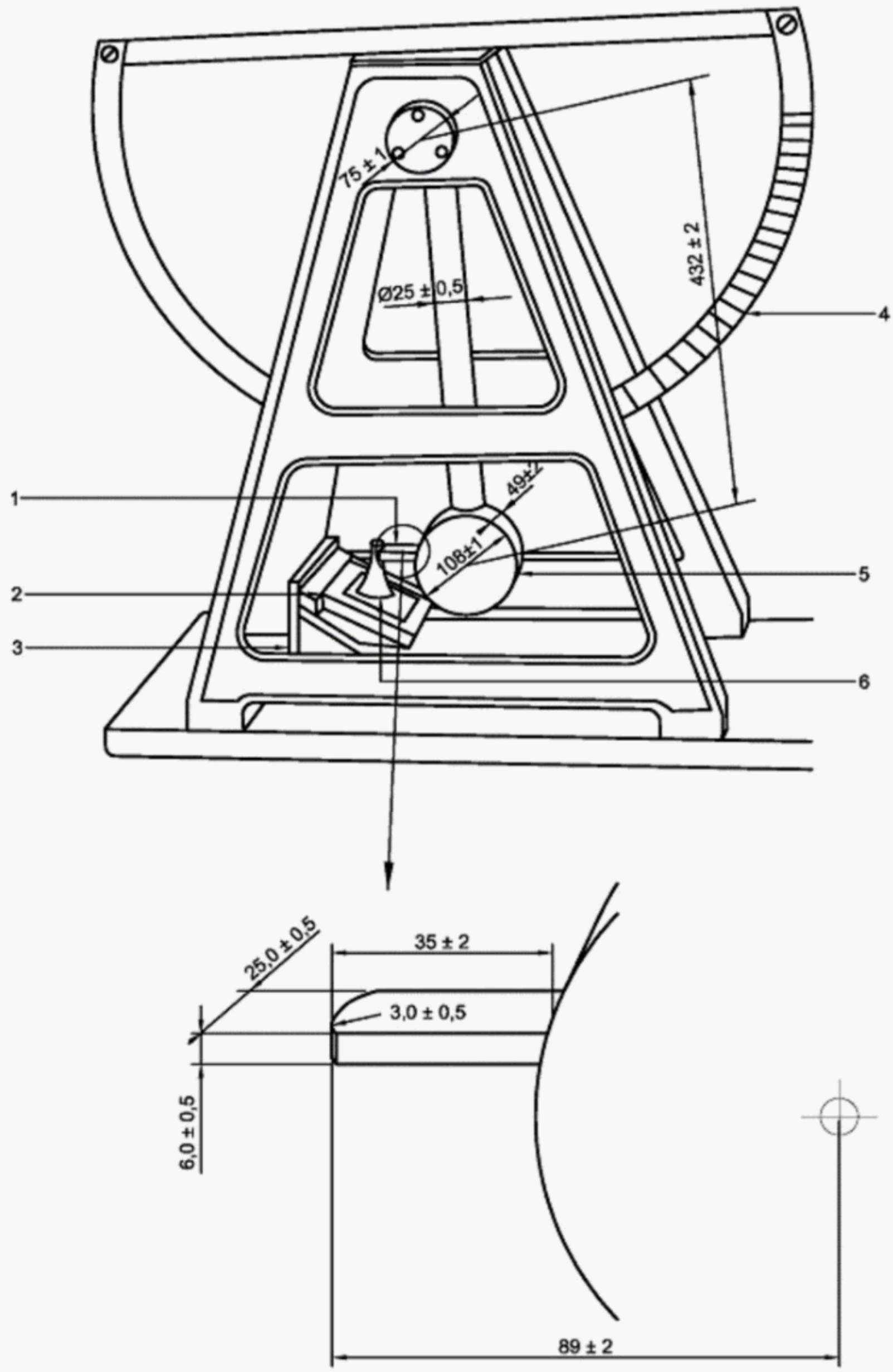

Key

1	Striker head	4	Energy scale
2	Heel tray	5	Pendulum
3	Base clamp	6	Test specimen

Figure 1 — Lateral impact tester

2.3 Metal mounting trays

An example of a suitable apparatus is shown in Figure 2. Each to contain a heel set in metal alloy of melting point between 100° C and 150° C.

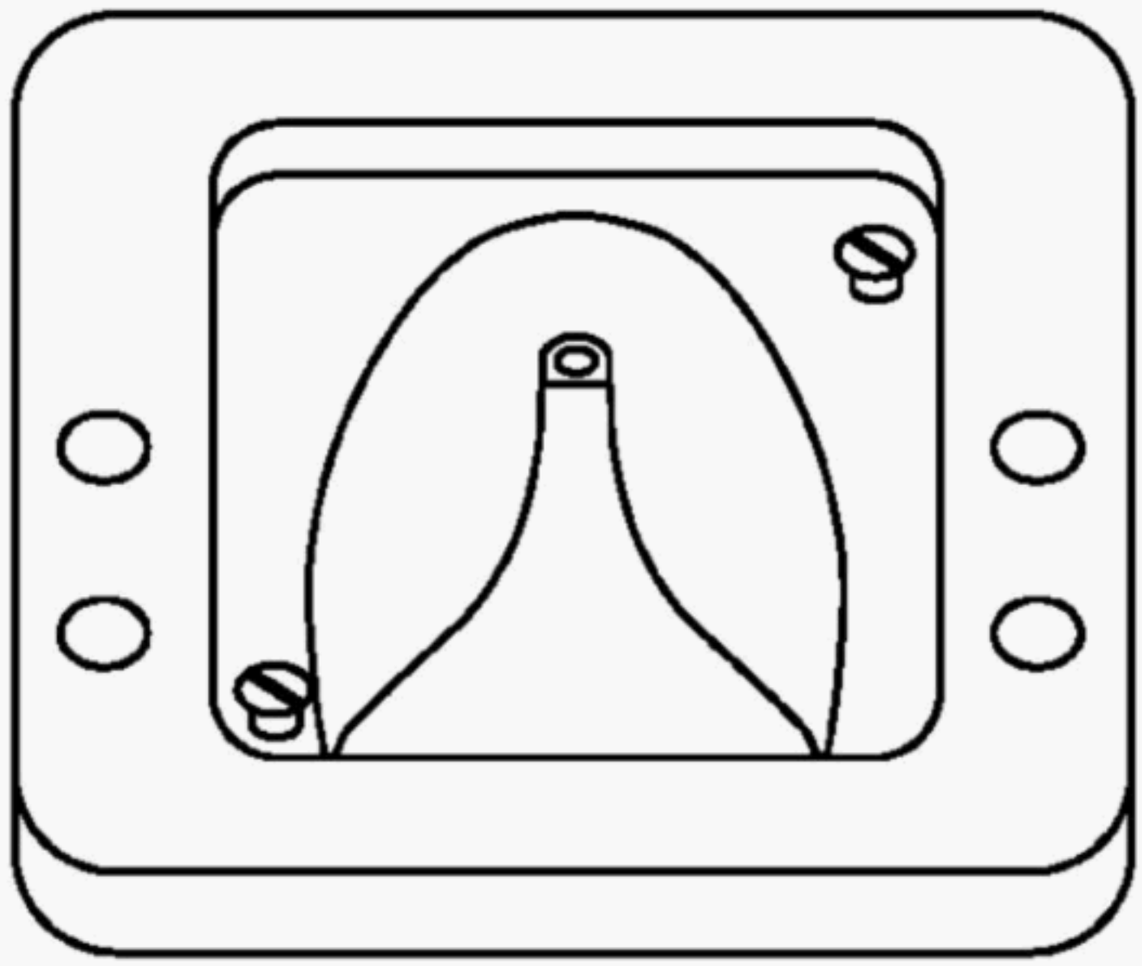

Figure 2 — Metal mounting tray with heel in position before addition of molten alloy

2.4 Metal alloy

Melting point between 100° C and 150° C.

3 Sampling and conditioning

3.1 Take free heels and set each heel in a dry metal mounting tray (3.2), using the procedure described in 3.2 or, for very short heel (usually those below 40 mm in height), the procedure described in 3.3, to obtain a test specimen assembly.

3.2 Place the heel centrally in the tray so that the seat breast edge is against a flat end of the tray and the heel tip points upwards (see Figure 2). Heat the metal alloy (3.3) until it is at the lowest temperature at which it will flow into all parts of the tray, filling the space around the heel to within 3 mm from the top. Allow the alloy to cool and set thereby providing a rigid mounting for the heel.

3.3 Since some very short heels cannot be struck correctly by the striker if mounted in accordance with 4.2 (because the bottom of the pendulum catches the base clump assembly), a different method of mounting is necessary. In such cases mount the heel with the rear of the heel seat against a flat end of the tray. Cut a small amount from the rear of the heel so as to set the heel further towards the rear of the mounting tray if this allows the striker to strike the heel correctly.

4 Test method

4.1 Principle

A heel, clamped with the tip uppermost and the stem approximately vertical, is subjected repeatedly to measured blows from a pendulum striker, the energy of the blows increasing successively until the heel fails.

4.2 Procedure

4.2.1 Position the test specimen assembly in the lateral impact tester (2.2) sliding the assembly up the inclined plane of the base clamp (2.1.5) as far as possible and locking into position with the back of the heel facing the pendulum. Set the test specimen assembly at a suitable angle to the horizontal so that the blow will be applied at right angles to the heel stem. Adjust the clamp so that the heel just contacts the striker when the pendulum is vertical, with the tip of the heel 6 mm above the striker tip.

4.2.2 Lift the pendulum to the 0,68 J position and release, so that the striker (2.1.3) falls against the heel stem. Catch the pendulum on its rebound to prevent a second blow. Repeat this procedure, increasing the impact energy at each blow by 0,68 J either until the heel stem breaks, until it bends and the pendulum jams, or until an impact energy of 18,3 J has been applied. Record total number of blows delivered.

4.2.3 Damage involving fracture or cracking of the heel at the point of impact of the striker is regarded as invalid in this test, since it is due to the effect of the striker acting as a chisel rather than fracture of the heel due to impact of the heel as in wear. If such damage occurs, report it together with this explanation.

4.2.4 Repeat the test with the other two test specimen assemblies by following the same procedure.

5 Expression of results

Express the result for each test specimen assembly as follows:

a) the number of blows to failure (or that no failure occurred after 27 blows) and the energy, in J, of the last blow;

b) the type of failure, as described in 4.2.2, or the fact that damage involving fracture or cracking of the heel at the point of the impact occurred, as described in 4.2.3.

6 Test report

The test report shall include the following information:

a) result for each heel, expressed in accordance with clause 5;

b) full description of the samples tested, including commercial styles codes, colours, nature, etc.;

c) reference to this method of test;

d) date of testing;

e) any deviation from this test method.

BSI — British Standards Institution

BSI is the independent national body responsible for preparing British Standards. It presents the UK view on standards in Europe and at the international level. It is incorporated by Royal Charter.

Revisions

British Standards are updated by amendment or revision. Users of British Standards should make sure that they possess the latest amendments or editions.

It is the constant aim of BSI to improve the quality of our products and services. We would be grateful if anyone finding an inaccuracy or ambiguity while using this British Standard would inform the Secretary of the technical committee responsible, the identity of which can be found on the inside front cover. Tel: +44 (0)20 8996 9000. Fax: +44 (0)20 8996 7400.

BSI offers members an individual updating service called PLUS which ensures that subscribers automatically receive the latest editions of standards.

Buying standards

Orders for all BSI, international and foreign standards publications should be addressed to Customer Services. Tel: +44 (0)20 8996 9001. Fax: +44 (0)20 8996 7001. Email: orders@bsi-global.com. Standards are also available from the BSI website at http://www.bsi-global.com.

In response to orders for international standards, it is BSI policy to supply the BSI implementation of those that have been published as British Standards, unless otherwise requested.

Information on standards

BSI provides a wide range of information on national, European and international standards through its Library and its Technical Help to Exporters Service. Various BSI electronic information services are also available which give details on all its products and services. Contact the Information Centre. Tel: +44 (0)20 8996 7111. Fax: +44 (0)20 8996 7048. Email: info@bsi-global.com.

Subscribing members of BSI are kept up to date with standards developments and receive substantial discounts on the purchase price of standards. For details of these and other benefits contact Membership Administration. Tel: +44 (0)20 8996 7002. Fax: +44 (0)20 8996 7001. Email: membership@bsi-global.com.

Information regarding online access to British Standards via British Standards Online can be found at http://www.bsi-global.com/bsonline.

Further information about BSI is available on the BSI website at http://www.bsi-global.com.

Copyright

Copyright subsists in all BSI publications. BSI also holds the copyright, in the UK, of the publications of the international standardization bodies. Except as permitted under the Copyright, Designs and Patents Act 1988 no extract may be reproduced, stored in a retrieval system or transmitted in any form or by any means – electronic, photocopying, recording or otherwise – without prior written permission from BSI.

This does not preclude the free use, in the course of implementing the standard, of necessary details such as symbols, and size, type or grade designations. If these details are to be used for any other purpose than implementation then the prior written permission of BSI must be obtained.

Details and advice can be obtained from the Copyright & Licensing Manager. Tel: +44 (0)20 8996 7070. Fax: +44 (0)20 8996 7553. Email: copyright@bsi-global.com.

BSI

389 Chiswick High Road

London

W4 4AL