ASME B18.15-2015

[Revision of ASME B18.15-1985 (R2008)]

Forged Eyebolts

AN AMERICAN NATIONAL STANDARD

The American Society of Mechanical Engineers

ASME B18.15-2015

[Revision of ASME B18.15-1985 (R2008)]

Forged Eyebolts

AN AMERICAN NATIONAL STANDARD

The American Society of Mechanical Engineers

Two Park Avenue • New York, NY • 10016 USA

Date of Issuance: August 14, 2015

This Standard will be revised when the Society approves the issuance of a new edition.

ASME issues written replies to inquiries concerning interpretations of technical aspects of this Standard. Interpretations are published on the Committee Web page and under go.asme.org/InterpsDatabase. Periodically certain actions of the ASME B18 Committee may be published as Cases. Cases are published on the ASME Web site under the B18 Committee Page at go.asme.org/B18committee as they are issued.

Errata to codes and standards may be posted on the ASME Web site under the Committee Pages to provide corrections to incorrectly published items, or to correct typographical or grammatical errors in codes and standards. Such errata shall be used on the date posted.

The B18 Committee Page can be found at go.asme.org/B18committee. There is an option available to automatically receive an e-mail notification when errata are posted to a particular code or standard. This option can be found on the appropriate Committee Page after selecting “Errata” in the “Publication Information” section.

ASME is the registered trademark of The American Society of Mechanical Engineers.

This code or standard was developed under procedures accredited as meeting the criteria for American National Standards. The Standards Committee that approved the code or standard was balanced to assure that individuals from competent and concerned interests have had an opportunity to participate. The proposed code or standard was made available for public review and comment that provides an opportunity for additional public input from industry, academia, regulatory agencies, and the public-at-large.

ASME does not “approve,” “rate,” or “endorse” any item, construction, proprietary device, or activity.

ASME does not take any position with respect to the validity of any patent rights asserted in connection with any items mentioned in this document, and does not undertake to insure anyone utilizing a standard against liability for infringement of any applicable letters patent, nor assumes any such liability. Users of a code or standard are expressly advised that determination of the validity of any such patent rights, and the risk of infringement of such rights, is entirely their own responsibility.

Participation by federal agency representative(s) or person(s) affiliated with industry is not to be interpreted as government or industry endorsement of this code or standard.

ASME accepts responsibility for only those interpretations of this document issued in accordance with the established ASME procedures and policies, which precludes the issuance of interpretations by individuals.

No part of this document may be reproduced in any form,
in an electronic retrieval system or otherwise,
without the prior written permission of the publisher.

The American Society of Mechanical Engineers
Two Park Avenue, New York, NY 10016-5990

Copyright © 2015 by
THE AMERICAN SOCIETY OF MECHANICAL ENGINEERS
All rights reserved
Printed in U.S.A.

CONTENTS

Foreword iv
Committee Roster v
Correspondence With the B18 Committee vi

1 Scope 1

2 Comparison With ISO Documents 1

3 Referenced Standards 1

4 Dimensions 1

5 Threads 1

6 Shank Length 4

7 Material 4

8 Finish 4

9 Designation 4

10 Quality Assurance 4

11 Marking 4

Tables

1 Type 1, Styles A and B Plain Pattern (Straight Shank) Eyebolt 2
2 Type 2, Styles A and B Shoulder Pattern Eyebolt 3
3 Type 1, Plain Pattern (Straight Shank) Eyebolt 5
4 Type 2, Shoulder Pattern Eyebolt 6

Nonmandatory Appendices

A Two Methods of Specifying Eyebolt Capacities 7
B Cautions and Definitions 9
C Application Information 10
D Inch Forged Eyebolts With Metric Threads 12

FOREWORD

Forged threaded eyebolts used in lifting applications come within the scope of ANSI Standards Committee B18 on Dimensional Standardization of Bolts, Nuts, Rivets, Screws, and Similar Fasteners, which was organized in March 1922 under the procedures of the American Engineering Standards Committee [later renamed the American National Standards Institute, Inc. (ANSI)], with the Society of Automotive Engineers and The American Society of Mechanical Engineers as joint sponsors.

Subcommittee No. 15 was appointed in March of 1960 and asked to give initial consideration to the establishment of a standard on forged eyebolts, including rated capacity. At its first meeting held on April 22, 1960, the committee decided to ask all of the leading suppliers to furnish dimensions, tolerances, and rated capacity for their standard eyebolts. These data were collected, consolidated, and studied in detail. It was soon apparent that it would be impossible to develop an ANSI standard which would agree with even a small percentage of the standard products then being produced. The first proposal, therefore, attempted to come as close as possible to an average value and still maintain an orderly progression from the smaller to the larger sizes.

ANSI Standards Committee B18 approved the proposal by letter ballot taken on September 24, 1964, and following approval by the sponsors, it was submitted on July 28, 1965, to ANSI for approval. Because of a conflict with USA Standard Specification for Carbon Steel Eyebolts, G38.2-1964, final approval was withheld..

Subsequent to the withdrawal of G38.2-1964, ANSI approved the B18 proposal on February 18, 1969. This revision was approved by letter ballot of ASME Committee B18 on August 27, 1982, and was subsequently approved by ASME (the sponsor) and submitted to ANSI for designation as an American National Standard. ANSI approval of this Standard was granted on July 17, 1985.

In 2013, the ASME B18 Committee received a request to update this Standard to include stainless steel forged eyebolts for use in marine applications. This work was assigned to Subcommittee 31, Studs, Lifting Eyes, and Bent Bolts, as Subcommittee 15 had been disbanded in May 2009. Previously, ASME B18.15M was withdrawn after it was confirmed that the Standard was not being used as a standard for a hard-metric fastener. The most commonly used international metric standard for eyebolts is DIN 580. It was also discovered in the investigation that when U.S. domestic producers of eyebolts receive orders for metric eyebolts, it is a common practice to use the closest inch eyebolt blank and just apply the closest coarse metric thread. Because of this common practice, an appendix was added to this revision to provide strength information and thread-to-eye-size guidance to facilitate consistency when this approach is employed by an eyebolt producer. This appendix is for information only and does not constitute mandatory requirements.

This revision was approved by the American National Standards Institute on June 1, 2015.

ASME B18 COMMITTEE
Standardization of Bolts, Nuts, Rivets, Screws, Washers, and Similar Fasteners

(The following is the roster of the Committee at the time of approval of this Standard.)

STANDARDS COMMITTEE OFFICERS

J. Greenslade, *Chair*
D. S. George, *Vice Chair*
W. H. King, *Vice Chair*
C. J. Gomez, *Secretary*

STANDARDS COMMITTEE PERSONNEL

V. Cartina, Nylok, LLC
L. Claus, *Contributing Member,* NNI Training and Consulting, Inc.
D. A. Clever, *Contributing Member,* Consultant
A. P. Cockman, Ford Motor Co.
C. A. D. de la Garza, TSP, Inc.
D. S. George, Ramco Specialties
C. J. Gomez, The American Society of Mechanical Engineers
J. Greenslade, Industrial Fasteners Institute
J. J. Grey, *Contributing Member,* Fastener Consulting Services, Inc.
A. Herskovitz, *Contributing Member,* Consultant
J. Jennings, *Contributing Member,* Naval Surface Warfare Center
W. H. King, Fastenal Co.
D. Korneffel, *Contributing Member,* Cadenas PARTsolutions
J. F. McCarrick, Defense Supply Center Philadelphia
M. D. Prasad, *Contributing Member,* Global M & F Solutions, Inc.
Q. M. Smith III, Oregon DOT
R. D. Strong, Doerken Corp.
W. K. Wilcox, Consultant
C. B. Williamson, Fastenal Co.
C. J. Wilson, Consultant

SUBCOMMITTEE 31 — STUDS, LIFTING EYES, AND BENT BOLTS

C. A. D. de la Garza, *Chair,* TSP, Inc.
T. Anderson, *Vice Chair,* Bay Bolt
J. F. Braden, Fasteners Unlimited
D. A. Clever, *Contributing Member,* Consultant
J. Finnegan, Safety Socket LLC
D. S. George, Ramco Specialties
J. Greenslade, Industrial Fasteners Institute
A. Herskovitz, Consultant
J. C. Jennings, Naval Surface Warfare Center
J. W. Lewis, Newport News Shipbuilding
J. F. McCarrick, Defense Supply Center Philadelphia
R. B. Meade, ATRONA Test Labs, Inc.
W. R. Schevey, BGM Fastener Co., Inc.
G. M. Simpson, Semblex Corp.
R. D. Strong, Doerken Corp.
W. K. Wilcox, Consultant
C. B. Williamson, Fastenal Co.
C. J. Wilson, Consultant
D. Winn, Kamax

CORRESPONDENCE WITH THE B18 COMMITTEE

General. ASME Standards are developed and maintained with the intent to represent the consensus of concerned interests. As such, users of this Standard may interact with the Committee by requesting interpretations, proposing revisions or a Case, and attending Committee meetings. Correspondence should be addressed to:

Secretary, B18 Standards Committee
The American Society of Mechanical Engineers
Two Park Avenue
New York, NY 10016-5990
http://go.asme.org/Inquiry

Proposing Revisions. Revisions are made periodically to the Standard to incorporate changes that appear necessary or desirable, as demonstrated by the experience gained from the application of the Standard. Approved revisions will be published periodically.

The Committee welcomes proposals for revisions to this Standard. Such proposals should be as specific as possible, citing the paragraph number(s), the proposed wording, and a detailed description of the reasons for the proposal, including any pertinent documentation.

Proposing a Case. Cases may be issued for the purpose of providing alternative rules when justified, to permit early implementation of an approved revision when the need is urgent, or to provide rules not covered by existing provisions. Cases are effective immediately upon ASME approval and shall be posted on the ASME Committee Web page.

Requests for Cases shall provide a Statement of Need and Background Information. The request should identify the Standard and the paragraph, figure, or table number(s), and be written as a Question and Reply in the same format as existing Cases. Requests for Cases should also indicate the applicable edition(s) of the Standard to which the proposed Case applies.

Interpretations. Upon request, the B18 Standards Committee will render an interpretation of any requirement of the Standard. Interpretations can only be rendered in response to a written request sent to the Secretary of the B18 Standards Committee at go.asme.org/Inquiry.

The request for an interpretation should be clear and unambiguous. It is further recommended that the inquirer submit his/her request in the following format:

Subject:	Cite the applicable paragraph number(s) and the topic of the inquiry.
Edition:	Cite the applicable edition of the Standard for which the interpretation is being requested.
Question:	Phrase the question as a request for an interpretation of a specific requirement suitable for general understanding and use, not as a request for an approval of a proprietary design or situation. The inquirer may also include any plans or drawings that are necessary to explain the question; however, they should not contain proprietary names or information.

Requests that are not in this format may be rewritten in the appropriate format by the Committee prior to being answered, which may inadvertently change the intent of the original request.

ASME procedures provide for reconsideration of any interpretation when or if additional information that might affect an interpretation is available. Further, persons aggrieved by an interpretation may appeal to the cognizant ASME Committee or Subcommittee. ASME does not "approve," "certify," "rate," or "endorse" any item, construction, proprietary device, or activity.

Attending Committee Meetings. The B18 Standards Committee regularly holds meetings and/or telephone conferences that are open to the public. Persons wishing to attend any meeting and/or telephone conference should contact the Secretary of the B18 Standards Committee. Future Committee meeting dates and locations can be found on the Committee Page at go.asme.org/B18committee.

FORGED EYEBOLTS

1 SCOPE

This Standard is limited to dimensions and capacities for carbon steel and corrosion-resistant stainless steel, forged threaded eyebolts intended primarily for lifting applications. For carbon steel construction, the sizes are limited to ¼ in. through 2½ in., and for corrosion-resistant stainless steel construction, the sizes are limited to ¼ in. through 1½ in. This Standard covers the following types and styles:

(a) Type 1, plain pattern (straight shank) (see Table 1)
  (1) Style A, long length
  (2) Style B, short length
(b) Type 2, shoulder pattern (see Table 2)
  (1) Style A, long length
  (2) Style B, short length

Nonmandatory Appendices A and B contain descriptive and cautionary information pertinent to forged eyebolts. Nonmandatory Appendix C contains information on the application of eyebolts. Nonmandatory Appendix D provides information on eyebolts with metric threads M6 through M64 and corresponding material and performance information.

The inclusion of dimensional data in this Standard is not intended to imply that all products described are stock production items. Consumers should consult with suppliers concerning availability of products.

2 COMPARISON WITH ISO DOCUMENTS

There is no comparable ISO standard for inch eyebolts. ISO 3266, Forged steel eyebolts grade 4 for general lifting purposes, includes information for metric dimensioned eyebolts.

3 REFERENCED STANDARDS

ASME B1.1, Unified Inch Screw Threads (UN and UNR Thread Form)
ASME B1.3, Screw Thread Gaging Systems for Acceptability — Inch and Metric Screw Threads (UN, UNR, UNJ, M, and MJ)
ASME B1.16M, Gages and Gaging for Metric M Screw Threads
ASME B18.12, Glossary of Terms for Mechanical Fasteners
ASME B18.18, Quality Assurance for Fasteners
ASME B30.26, Rigging Hardware

Publisher: The American Society of Mechanical Engineers (ASME), Two Park Avenue, New York, NY 10016-5990 (www.asme.org)

ASTM A380, Cleaning, Descaling, and Passivation of Stainless Steel Parts, Equipment, and Systems
ASTM A473, Stainless Steel Forgings
ASTM A489, Carbon Steel Eyebolts
ASTM F541, Alloy Steel Eyebolts
ASTM F606, Determining the Mechanical Properties of Externally and Internally Threaded Fasteners, Washers, Direct Tension Indicators, and Rivets
ASTM F788/F788M, Surface Discontinuities of Bolts, Screws, and Studs, Inch and Metric Series
ASTM F1941, Electrodeposited Coatings on Threaded Fasteners [Unified Inch Screw Threads (UN/UNR)]

Publisher: American Society for Testing and Materials (ASTM International), 100 Barr Harbor Drive, P.O. Box C700, West Conshohocken, PA 19428-2959 (www.astm.org)

DIN 580, Lifting Eye Bolts

Publisher: DIN Deutsches Institut für Normung e. V., Am DIN-Platz, Burggrafenstraße 6, 10787 Berlin, Germany (www.din.de)

ISO 3266, Forged steel eyebolts grade 4 for general lifting purposes

Publisher: International Organization for Standardization (ISO), Central Secretariat, Chemin de Blandonnet 8, Case Postale 401, 1214 Vernier, Geneva, Switzerland (www.iso.org)

4 DIMENSIONS

All dimensions in this Standard are in inches, unless otherwise stated.

5 THREADS

Threads shall be plain finished unified inch coarse Class 2A in accordance with ASME B1.1. Plated or coated threads shall conform to the maximum limit of Class 3A (GO) and the minimum limit of Class 2A (NOT GO).

Unless otherwise specified, the dimensional acceptability of screw threads shall be determined based on System 21 of ASME B1.3.

Table 1 Type 1, Styles A and B Plain Pattern (Straight Shank) Eyebolt

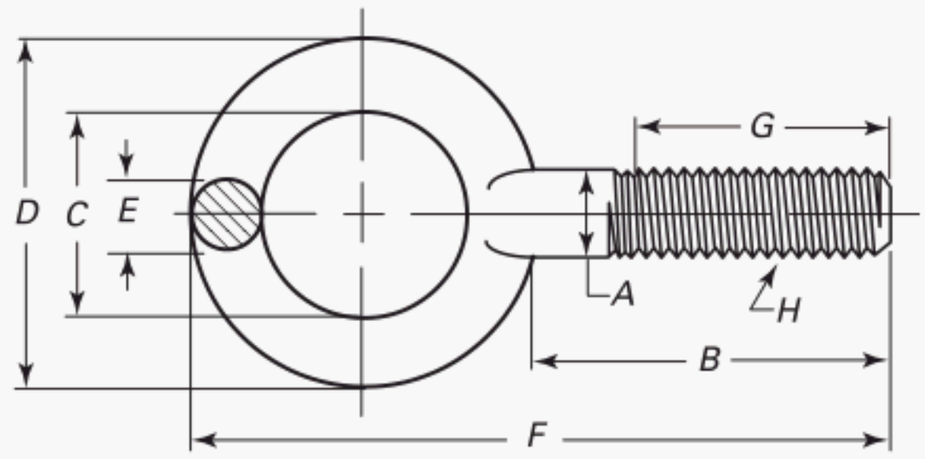

Nominal Size		Major Thread Dia., *A*	Shank Length, *B* Style A	Shank Length, *B* Style B	Eye I.D., *C*	Nominal Eye O.D., *D*	Eye Sect. Dia., *E*	Overall Length, *F*	Min. Length Full Thread, *G* Style A	Min. Length Full Thread, *G* Style B	Thread Size UNC 2A, *H*
1/4	0.25	0.25	1.00	1.00	0.69	1.19	0.19	2.06	0.75	0.75	1/4–20 or
[Note (1)]		0.28	1.06	1.06	0.81		0.25	2.38			0.250–20
5/16	0.31	0.31	1.12	1.06	0.81	1.44	0.25	2.44	0.81	0.75	5/16–18 or
[Note (1)]		0.34	1.19	1.13	0.94		0.31	2.75			0.3125–18
3/8	0.38	0.38	1.25	1.12	0.94	1.69	0.31	2.81	0.88	0.75	3/8–16 or
[Note (1)]		0.41	1.38	1.25	1.06		0.38	3.19			0.375–16
7/16	0.44	0.44	1.38	1.13	1.00	1.81	0.34	3.06	1.00	0.75	7/16–14 or
		0.47	1.50	1.25	1.12		0.41	3.44			0.4375–14
1/2	0.50	0.50	1.50	1.13	1.12	2.12	0.44	3.50	1.12	0.75	1/2–13 or
[Note (1)]		0.53	1.62	1.25	1.25		0.50	3.88			0.500–13
9/16	0.56	0.56	1.62	1.21	1.19	2.25	0.47	3.75	1.25	0.84	9/16–12 or
		0.59	1.75	1.34	1.31		0.53	4.12			0.5625–12
5/8	0.62	0.62	1.75	1.31	1.31	2.56	0.56	4.19	1.38	0.94	5/8–11 or
[Note (1)]		0.66	1.88	1.44	1.44		0.62	4.56			0.625–11
3/4	0.75	0.75	2.00	1.50	1.44	2.81	0.62	4.69	1.62	1.13	3/4–10 or
[Note (1)]		0.78	2.12	1.62	1.56		0.69	5.06			0.750–10
7/8	0.88	0.88	2.25	1.75	1.56	3.19	0.75	5.31	1.81	1.31	7/8–9 or
[Note (1)]		0.91	2.38	1.88	1.69		0.81	5.69			0.875–9
1	1.00	1.00	2.50	1.94	1.69	3.56	0.88	5.94	2.06	1.50	1–8 or
[Note (1)]		1.06	2.62	2.06	1.81		0.94	6.31			1.000–8
1 1/8	1.12	1.12	2.75	2.13	1.94	4.06	1.00	6.69	2.31	1.69	1 1/8–7 or
		1.19	2.88	2.26	2.06		1.06	7.06			1.125–7
1 1/4	1.25	1.25	3.00	2.38	2.12	4.44	1.09	7.31	2.50	1.88	1 1/4–7 or
[Note (1)]		1.34	3.12	2.50	2.25		1.16	7.69			1.250–7
1 1/2	1.50	1.50	3.50	2.75	2.44	5.19	1.31	8.56	3.00	2.25	1 1/2–6 or
[Note (1)]		1.59	3.62	2.87	2.56		1.38	8.94			1.500–6
1 3/4	1.75	1.75	3.75	3.18	2.75	6.00	1.50	9.50	3.19	2.62	1 3/4–5 or
		1.84	3.88	3.31	3.00		1.62	10.12			1.750–5
2	2.00	2.00	4.00	3.62	3.06	6.88	1.75	10.56	3.38	3.00	2–4 1/2 or
[Note (1)]		2.09	4.25	3.87	3.44		1.88	11.44			2.000–4.50
2 1/2	2.50	2.50	5.00	4.50	3.81	8.50	2.19	13.19	4.25	3.75	2 1/2–4 or
[Note (1)]		2.62	5.25	4.75	4.19		2.31	14.06			2.500–4

NOTE:
(1) Preferred.

Table 2 Type 2, Styles A and B Shoulder Pattern Eyebolt

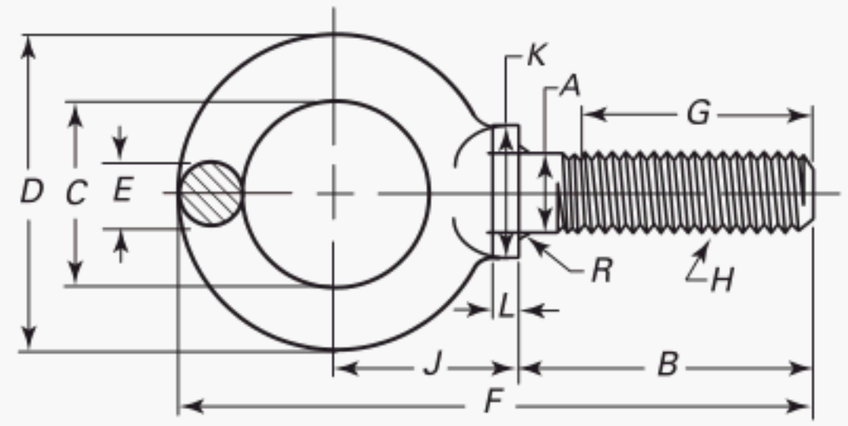

Nominal Size		Major Thread Dia., *A*	Shank Length, *B*		Eye I.D., *C*	Nominal Eye O.D., *D*	Eye Sect. Dia., *E*	Overall Length, *F*	Min. Length Full Thread, *G*		Thread Size UNC 2A, *H*	Centerline Eye to Shoulder, *J*	Shoulder Dia., *K*	Shoulder Height, *L*	Radius Under Shoulder, *R*
			Style A	Style B					Style A	Style B					
1/4	0.25	0.25	1.00	1.00	0.69	1.19	0.19	2.22	0.75	0.75	1/4–20 or	0.69	0.50	0.12	0.015
[Note (1)]		0.28	1.06	1.06	0.81		0.25	2.53			0.250–20	0.81	0.56	0.19	0.025
5/16	0.31	0.31	1.12	1.06	0.81	1.44	0.25	2.66	0.81	0.75	5/16–18 or	0.88	0.56	0.12	0.015
[Note (1)]		0.34	1.19	1.13	0.94		0.31	2.97			0.3125–18	1.00	0.62	0.19	0.025
3/8	0.38	0.38	1.25	1.12	0.94	1.69	0.31	3.09	0.88	0.75	3/8–16 or	1.06	0.62	0.12	0.015
[Note (1)]		0.41	1.38	1.25	1.06		0.38	3.47			0.375–16	1.19	0.69	0.19	0.025
7/16	0.44	0.44	1.38	1.13	1.00	1.81	0.34	3.41	1.00	0.75	7/16–14 or	1.19	0.75	0.19	0.015
		0.47	1.50	1.25	1.12		0.41	3.78			0.4375–14	1.31	0.81	0.25	0.025
1/2	0.50	0.50	1.50	1.13	1.12	2.12	0.44	3.81	1.12	0.75	1/2–13 or	1.31	0.88	0.19	0.015
[Note (1)]		0.53	1.62	1.25	1.25		0.50	4.19			0.500–13	1.44	0.94	0.25	0.025
9/16	0.56	0.56	1.62	1.21	1.19	2.25	0.47	4.19	1.25	0.84	9/16–12 or	1.50	0.94	0.22	0.020
		0.59	1.75	1.34	1.31		0.53	4.56			0.5625–12	1.62	1.00	0.28	0.045
5/8	0.62	0.62	1.75	1.31	1.31	2.56	0.56	4.56	1.38	0.94	5/8–11 or	1.59	1.00	0.25	0.020
[Note (1)]		0.66	1.88	1.44	1.44		0.62	4.94			0.625–11	1.72	1.06	0.31	0.045
3/4	0.75	0.75	2.00	1.50	1.44	2.81	0.62	5.06	1.62	1.12	3/4–10 or	1.72	1.12	0.25	0.020
[Note (1)]		0.78	2.12	1.62	1.56		0.69	5.50			0.750–10	1.91	1.25	0.31	0.045
7/8	0.88	0.88	2.25	1.75	1.56	3.19	0.75	5.75	1.81	1.31	7/8–9 or	2.03	1.31	0.31	0.040
[Note (1)]		0.91	2.38	1.88	1.69		0.81	6.19			0.875–9	2.22	1.44	0.38	0.065
1	1.00	1.00	2.50	1.94	1.69	3.56	0.88	6.44	2.06	1.50	1–8 or	2.22	1.50	0.38	0.060
[Note (1)]		1.06	2.62	2.06	1.81		0.94	6.88			1.000–8	2.41	1.62	0.44	0.095
1 1/8	1.12	1.12	2.75	2.13	1.94	4.06	1.00	7.31	2.31	1.69	1 1/8–7 or	2.59	1.69	0.44	0.060
		1.19	2.88	2.26	2.06		1.06	7.75			1.125–7	2.78	1.81	0.50	0.095
1 1/4	1.25	1.25	3.00	2.38	2.12	4.44	1.09	8.00	2.50	1.88	1 1/4–7 or	2.84	1.88	0.50	0.060
[Note (1)]		1.34	3.12	2.50	2.25		1.16	8.44			1.250–7	3.03	2.00	0.56	0.095
1 1/2	1.50	1.50	3.50	2.75	2.44	5.19	1.31	9.22	3.00	2.25	1 1/2–6 or	3.19	2.12	0.50	0.060
[Note (1)]		1.59	3.62	2.87	2.56		1.38	9.72			1.500–6	3.44	2.25	0.62	0.095
1 3/4	1.75	1.75	3.75	3.18	2.75	6.00	1.50	10.50	3.19	2.62	1 3/4–5 or	3.88	2.50	0.50	0.060
		1.84	3.88	3.31	3.00		1.62	11.12			1.750–5	4.12	2.62	0.62	0.095
2	2.00	2.00	4.00	3.62	3.06	6.88	1.75	11.53	3.38	3.00	2–4 1/2 or	4.25	2.88	0.62	0.060
[Note (1)]		2.09	4.12	3.79	3.44		1.88	12.22			2.000–4.50	4.50	3.00	0.75	0.095

NOTE:
(1) Preferred.

6 SHANK LENGTH

Shank length includes the chamfer to the underside of the eye ring for plain pattern (straight shank) and to the faced collar for shoulder pattern eyebolts.

7 MATERIAL

7.1 Carbon and Alloy Steel Forged

The material and mechanical property requirements for general purpose carbon steel eyebolts shall be in accordance with ASTM A489. Eyebolts requiring improved toughness or intended primarily for temperature applications to −40°F (−40°C) shall be in accordance with ASTM F541. ASTM A489 and ASTM F541 eyebolts shall be capable of meeting the rated capacities of Tables 3 and 4.

7.2 Corrosion-Resistant Steel Forged

When corrosion-resistant steel is required, refer to ASTM A473, alloy types 304, 304L or 316, and 316L. Eyebolts of ASTM A473 materials shall be capable of meeting the rated capacities of Tables 3 and 4. The alloy type as listed in ASTM A473 shall be marked on the eyebolt eye.

7.3 Other Materials

When other materials are required, the material shall be as agreed upon by the purchaser and supplier.

8 FINISH

8.1 Steel

8.1.1 Unless otherwise specified, eyebolts shall be supplied with a natural (as processed) finish, unplated or uncoated, in a clean condition, and lightly oiled.

8.1.2 When zinc plating is specified, ASTM F1941 shall be designated. Other finishes may be used based on an agreement between the purchaser and supplier. (This is not recommended; see para. C-7 in Nonmandatory Appendix C.)

8.2 Corrosion-Resistant Steels

Corrosion-resistant steels shall be passivated in accordance with ASTM A380.

9 DESIGNATION

Eyebolts shall be designated by the following data in the sequence shown below:

(a) ASME B18.15

(b) nominal size (fractional or decimal equivalent) and threads per inch

(c) pattern

(d) type

(e) style

(f) material (including standard), including alloy type if stainless steel

(g) surface treatment (when specified including standard number), including required callout from standard

EXAMPLE: ASME B18.15, ⅜-16, plain pattern (straight shank), Type 1, Style A, steel per ASTM A489, zinc plated per ASTM F1941 5AT

10 QUALITY ASSURANCE

10.1 Defects

Eyebolts shall be free from visible defects that might affect serviceability. Eyebolts should be routinely visually inspected for such defects according to ASME B18.18.

10.2 Dimensional Conformance

Unless otherwise specified, all characteristics shall be inspected to the inspection levels shown in ASME B18.18.

10.3 Tensile Properties

The tensile properties shall be determined in accordance with ASTM F606 using the thread engagements as prescribed in Nonmandatory Appendix C.

10.4 Surface Discontinuities

The inspection and evaluation of surface discontinuities shall be in accordance with the requirements in ASTM F788/F788M. Threads shall have no laps at the root or on the flank located below the pitch diameter.

11 MARKING

Each eyebolt shall have the manufacturer's name or identification mark forged in raised characters on the surface of the lifting eye.

Table 3 Type 1, Plain Pattern (Straight Shank) Eyebolt

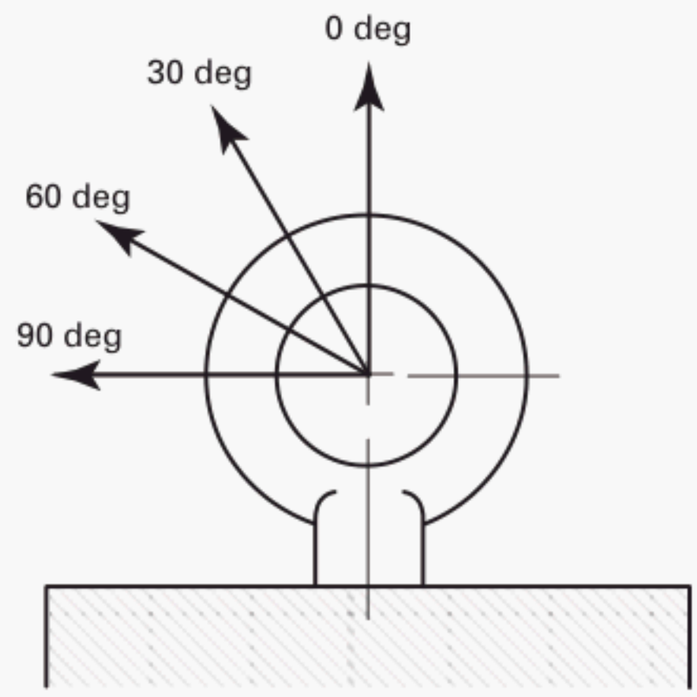

Nominal Size [Note (1)]	Carbon, Alloy Steel, and Corrosion-Resistant Stainless Steel Rated Rigger's Capacity, lb [Notes (2)–(4)]			
	0 deg	30 deg	60 deg	90 deg
1/4	400	70	NR	NR
5/16	680	200	NR	NR
3/8	1,000	375	200	155
7/16	1,380	500	300	235
1/2	1,840	805	470	395
5/8	2,370	1,105	635	520
3/4	2,940	1,340	805	670
7/8	4,340	2,115	1,190	1,040
1	6,000	2,815	1,740	1,475
1 1/8	7,880	3,670	2,390	2,110
1 1/4	9,920	4,660	3,010	2,610
1 3/8	12,600	5,896	3,752	3,350
1 1/2	18,260	8,575	5,495	4,960
1 3/4	24,700	11,524	7,500	6,700
2	32,500	15,210	9,915	8,880
2 1/2	52,000	24,500	16,800	14,000

NOTES:

(1) Not all sizes may be standard production or available. Suppliers should be consulted prior to attempting procurement.

(2) Warning: Side (angular) loading of plain pattern eyebolts is not recommended for any size. Extreme caution should be taken when side loading these eyebolts.

(3) Primary consideration for the use of stainless steel is its anticorrosion characteristics. Strength is the secondary consideration. Therefore, while calculations determine that stainless steel to ASTM A473 has higher mechanical properties than ASTM A489, ASME does not list stainless steel with capacities higher than carbon steel capacities.

(4) See Nonmandatory Appendix A for information regarding the use of rigger's capacity.

Table 4 Type 2, Shoulder Pattern Eyebolt

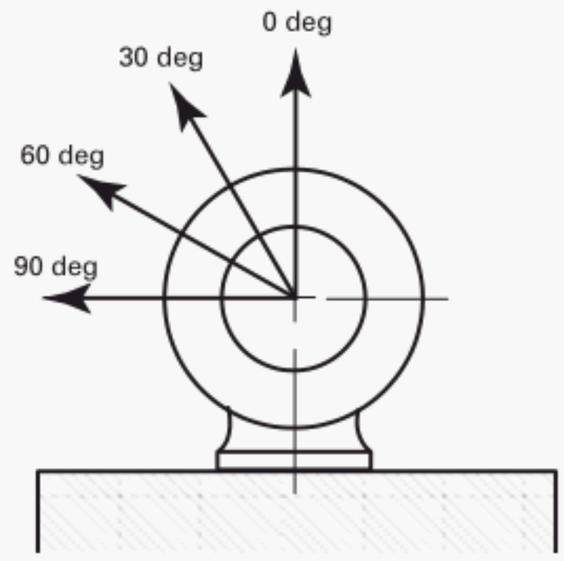

Nominal Size	Carbon, Alloy Steel, and Corrosion-Resistant Stainless Steel Rated Rigger's Capacity, lb [Notes (1)–(3)]			
	0 deg	30 deg	60 deg	90 deg
1/4	400	75	NR	NR
5/16	680	210	NR	NR
3/8	1,000	400	220	180
7/16	1,380	530	330	260
1/2	1,840	850	520	440
5/8	2,370	1,160	700	570
3/4	2,940	1,410	890	740
7/8	4,340	2,230	1,310	1,140
1	6,000	2,960	1,910	1,630
1 1/8	7,880	3,850	2,630	2,320
1 1/4	9,920	4,790	3,840	3,390
1 3/8	12,600	6,200	4,125	3,690
1 1/2	18,260	9,010	6,040	5,460
1 3/4	24,700	12,100	8,250	7,370
2	32,500	15,970	10,910	9,740

NOTES:

(1) Primary consideration for the use of stainless steel is its anticorrosion characteristics. Strength is the secondary consideration. Therefore, while calculations determine that stainless steel to ASTM A473 has higher mechanical properties than ASTM A489, ASME does not list stainless steel with capacities higher than carbon steel capacities.

(2) Not all sizes may be standard production or available. Suppliers should be consulted prior to attempting procurement.

(3) See Nonmandatory Appendix A for information regarding the use of rigger's capacity.

NONMANDATORY APPENDIX A
TWO METHODS OF SPECIFYING EYEBOLT CAPACITIES

A-1 INTRODUCTION

Two methods are currently used in specifying the capacities of forged steel eyebolts. One is more commonly used by riggers and shop personnel, while the other is generally preferred by engineers and designers of lifting rigs. Care must be exercised in selecting and using the correct type of capacity for each application.

A-2 RIGGER'S CAPACITY

The rigger's capacity refers to the actual load a single eyebolt can lift. The allowable load varies with the angle between the leg of the lifting rig and the shank of the eyebolt. In general, it also assumes that the load to be lifted acts along the axis through the shank. (The primary exception is where the eyebolts are mounted on the sides of the load.) Rigger's capacities are most easily used when the eyebolts are mounted on the top of a uniformly distributed load. In such cases, the total load is divided by the number of eyebolts to be used for the lift in order to determine the required capacity, taking into account the angle of the legs of the rig. Figure A-1 shows such an application.

By symmetry in Fig. A-1, it is apparent that each eyebolt carries one-half of the total load, i.e., 500 lb in a vertical direction. Therefore, two eyebolts must be used, each having a rigger's capacity of at least 500 lb for a sling angle of 30 deg.

A-3 ENGINEERING CAPACITY

The engineering capacity, on the other hand, refers to the allowable tension in the leg of the lifting rig as it is applied to the eyebolt. This type of capacity is particularly useful when the load distribution is nonuniform, requiring nonsymmetrical slings, or when the eyebolts are not placed on the top surface of the load. In such cases, the load to be lifted does not act through the shank of the eyebolt. It is necessary to determine the tension in each leg of the rig before sizing the eyebolts. Simply dividing the total load by the number of eyebolts to be used may give erroneous and unsafe results. Figure A-2 shows such an application.

In Fig. A-2

$$T_1 \sin 45 = T_2 \sin 30$$

Thus

$$T_1 = T_2 \frac{\sin 30}{\sin 45}$$

Fig. A-1 Uniform Weight Distribution

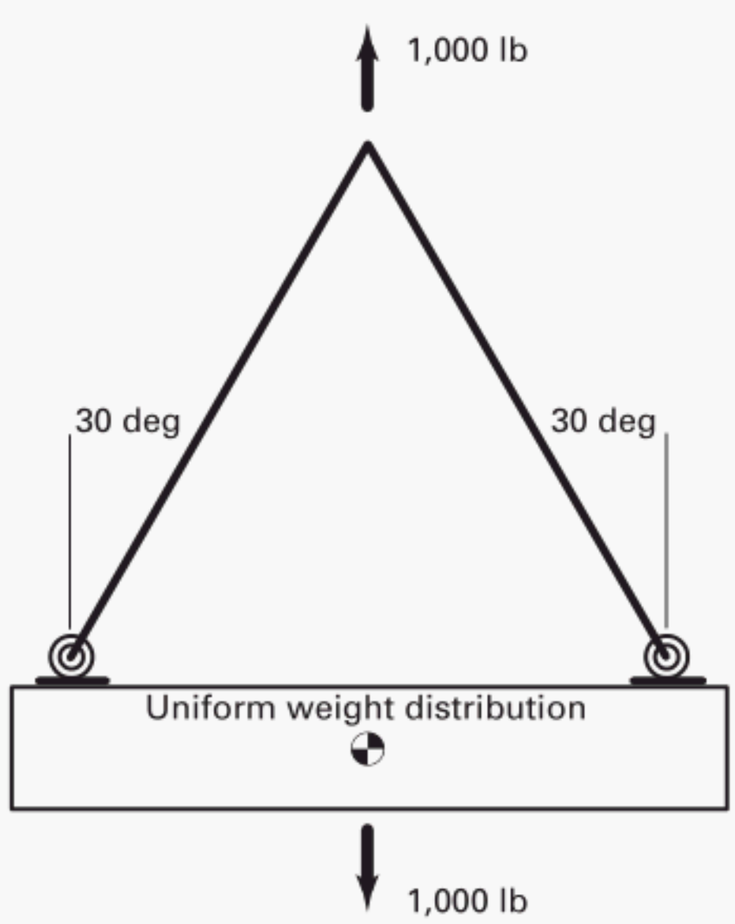

Fig. A-2 Nonuniform Weight Distribution

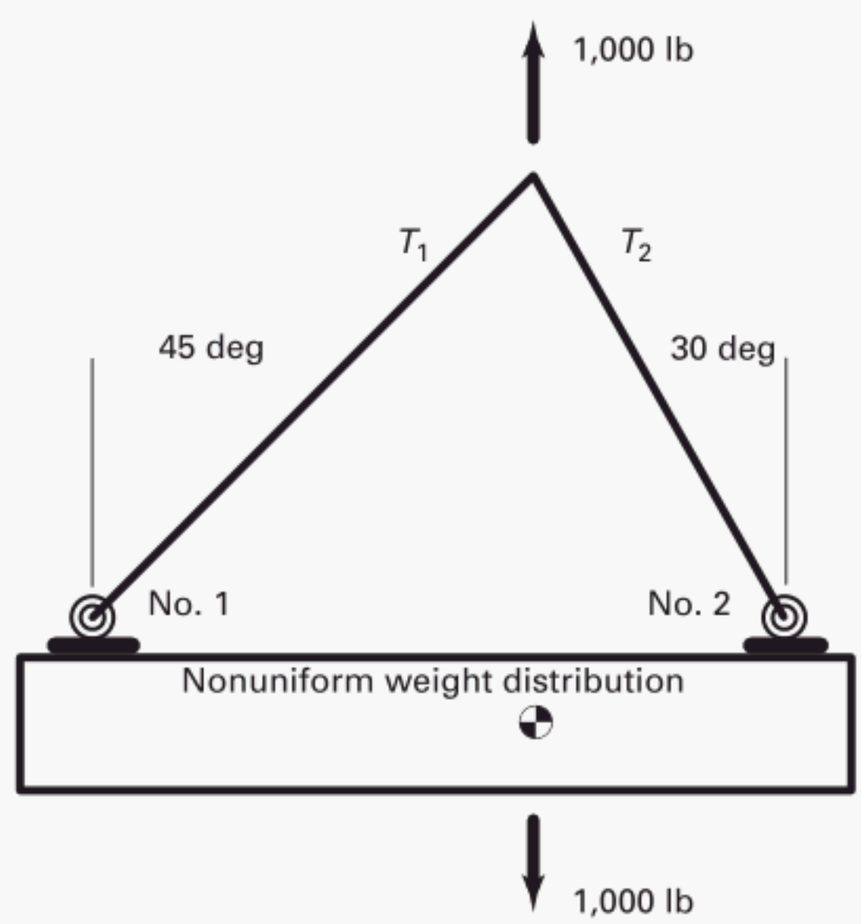

Also

$$T_1 \cos 45 + T_2 \cos 30 = 1{,}000$$

Substituting for T_1 yields

$$T_2 \frac{\cos 45}{\sin 45} \sin 30 + T_2 \cos 30 = 1{,}000$$

$$T_2 = \frac{1{,}000}{\dfrac{\sin 30}{\tan 45} + \cos 30}$$

Thus

$$T_2 = 732.05 \text{ lb}$$

Substitution yields

$$T_1 = 732.05 \frac{\sin 30}{\sin 45}$$

$$T_1 = 517.64 \text{ lb}$$

Thus, eyebolt no. 1 requires an engineering capacity of at least 518 lb for an angle of 45 deg, while eyebolt no. 2 requires an engineering capacity of at least 732 lb for an angle of 30 deg.

A-4 ADDITIONAL INFORMATION

Additional information on lifting hardware can be found in ASME B30.26.

NONMANDATORY APPENDIX B
CAUTIONS AND DEFINITIONS

B-1 ALTERING OF EYEBOLTS

Eyebolts should never be ground, notched, undercut, or welded. Such alterations will weaken the eyebolt. Eyebolts showing signs of having been so altered should immediately be destroyed.

B-2 EXTREME HEAT

Eyebolts should never be subjected to heat in excess of 900°F (480°C). Important physical properties are likely to be changed by such heating, creating an unsafe bolt. Eyebolts having been subjected to such heating should be immediately destroyed.

B-3 HOW TO DESTROY

Eyebolts that are being removed from service should be rendered unusable. Crushing or cutting clear across the eye is recommended.

B-4 ALWAYS STAND CLEAR

Never stand, work, or crawl under the load. If the load could swing, or if the pieces could fly in the event of a drop, allow for this possibility by establishing a safe distance from the load.

B-5 ELONGATION AND BENDING

Any visible bending or elongation of the eyebolt is a danger signal and indicates that it has been stressed beyond rated capacity. The bolt should be removed and destroyed, and the application should be investigated.

B-6 DEFINITION OF RATED CAPACITY

Rated capacity is the maximum recommended load that should be exerted on the item. All rated capacities, unless otherwise noted, are for in-line pull with respect to the centerline of the item.

B-7 DEFINITION OF SAFETY FACTOR

Safety factor is an industry term denoting theoretical reserve capacity. It is usually computed by dividing the catalog-stated ultimate load by the catalog-stated working load limit and generally expressed as a ratio, e.g., 5 to 1.

NONMANDATORY APPENDIX C
APPLICATION INFORMATION

C-1 CAPACITY

Capacities shown in Tables 3 and 4 are for carbon steel ASTM A489 eyebolts, at temperatures between 30°F (−1°C) and 275°F (135°C). Carbon steel is subject to failure from shock loading at temperatures below 30°F (−1°C) and loses strength at temperatures above 275°F (135°C).

C-2 ANGULAR LIFT

Refer to Tables 3 and 4 for reduced loads on angular lift capacities.

C-3 LOAD APPLICATION

Loads must always be applied to eyebolts in the plane of the eye, not at some angle to this plane (see Fig. C-1).

C-4 TYPE 1 INSTALLATION

Type 1 plain eyebolts must be engaged to within one-half turn from the eye end of the threads to obtain rated capacities.

C-5 TYPE 2 INSTALLATION

Type 2 shoulder eyebolts should bear firmly against the mating part; otherwise, the rated capacity must be reduced to those indicated for Type 1 eyebolts. A steel washer or spacer not to exceed one thread pitch may be required to put the plane of the eye in the direction of the load when the shoulder is seated. An additional safety factor should be considered when a washer or spacer is used, as this may reduce the capacity of the shoulder eyebolt based on the load pattern.

C-6 RATED CAPACITIES

To attain the rated capacities in Tables 3 and 4, minimum thread shank length of engagement must be as follows:

(a) steel — one thread diameter

(b) cast iron, brass, bronze — 1.5 thread diameter

(c) aluminum, magnesium, zinc, plastic — two thread diameters

C-7 VISUAL INSPECTION

Eyebolts should be visually inspected for flaws prior to applying a coating. Coating, painting, galvanizing, or plating covers flaws and interferes with inspection. Coatings are not recommended.

C-8 USE IN TAPPED HOLES

Tapped holes for plain pattern (straight shank) eyebolts are threaded for the full length of eyebolt engagement. Tapped holes for shoulder pattern eyebolts are

Fig. C-1 Load Application

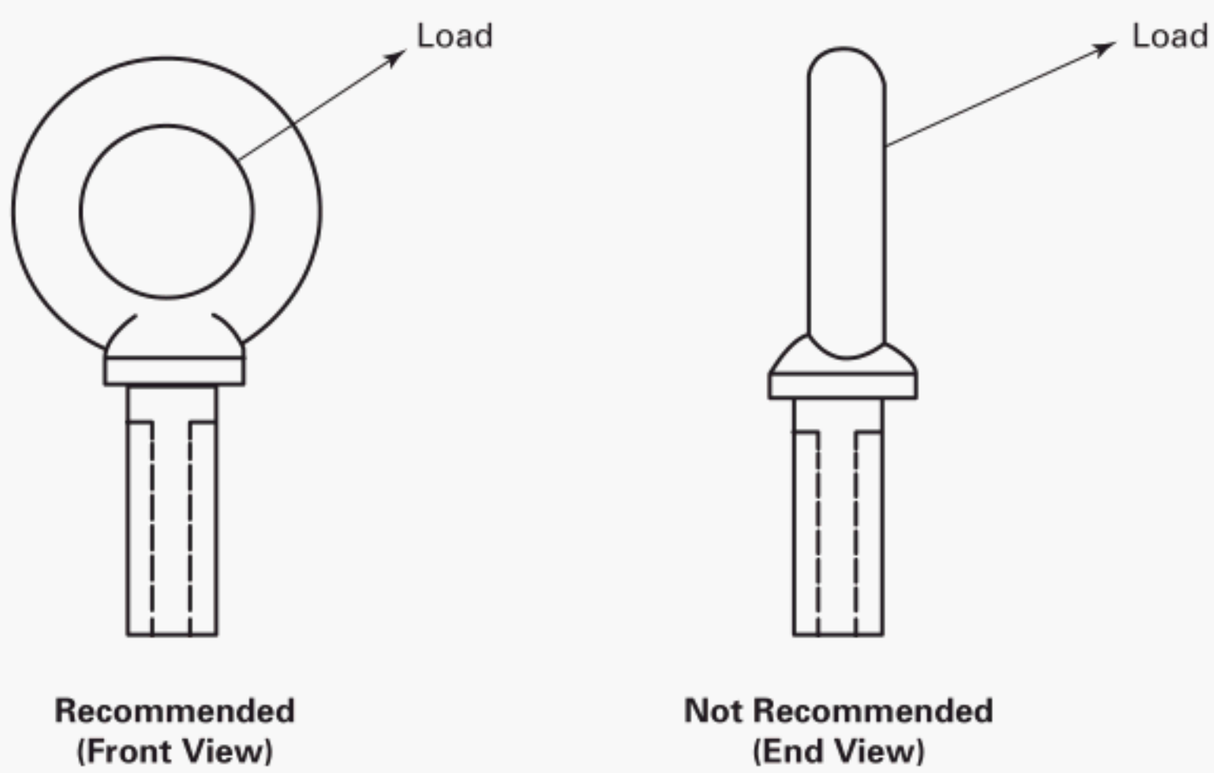

threaded for the full length with clearance for the unthreaded portion of the eyebolt to allow shoulder seating.

C-9 USE IN UNTAPPED HOLES

For untapped through-hole applications, shoulder pattern, long-length (Type 2, Style A) eyebolts are recommended, using a steel washer and nut with the required thread engagement.

NONMANDATORY APPENDIX D
INCH FORGED EYEBOLTS WITH METRIC THREADS

D-1 DIMENSIONS

ISO Standards are available for fully dimensioned metric eyebolts (e.g., ISO 3266, Forged steel eyebolts grade 4 for general lifting purposes). This Nonmandatory Appendix is for the use of inch dimensioned eyes with metric threads. ASME B18.15 metric eyebolts are soft conversion metric except for thread dimensions.

NOTE: The appropriate forged eyebolt for the metric thread being requested is a matter of interpretation and should be agreed upon in the purchase order. The information in this Nonmandatory Appendix is a compilation of information from several manufacturers.

D-2 THREADS

D-2.1 Thread Dimensions

D-2.1.1 Thread dimensions are in accordance with ASME B1.13M[1] and shall be class 6g before plating or coating and shall be accepted using 6g GO and NOT GO gages in accordance with ASME B1.16M.

D-2.1.2 Plated or coated threads shall be accepted using 6h GO and 6g NOT GO unless otherwise agreed to between purchaser and buyer.

[1] ASME B1.13M, Metric Screw Threads: M Profile

D-2.2 Thread Acceptance

Thread acceptance shall be determined by the use of System 21 gages in accordance with ASME B1.3.

D-3 MATERIALS

D-3.1 Carbon and Alloy Steel

The material and mechanical property requirements for general purpose carbon steel eyebolts are covered by ASTM A489. Eyebolts requiring improved toughness or intended primarily for low temperature applications to −40°F (−40°C) are covered by ASTM F541.

D-3.2 Corrosion-Resistant Steel

When corrosion-resistant steel is required, refer to ASTM A473.

D-3.3 Other Materials

When other materials are required, the material shall be as agreed upon by the purchaser and supplier.

D-4 METRIC CAPACITY

Capacity values for 0 deg were derived from various supplier catalogs (see Notes in Tables D-1 and D-2). Angle load capacity percentages from 0 deg calculated at 60% at 30 deg, 30% at 45 deg, 25% at 60 deg, and 20% at 90 deg. It is recommended that if eyebolts require complete metric dimensions and performance, ISO 3266 or DIN 580 should be procured.

Table D-1 Type 1, Metric Plain Pattern (Straight Shank) Eyebolt

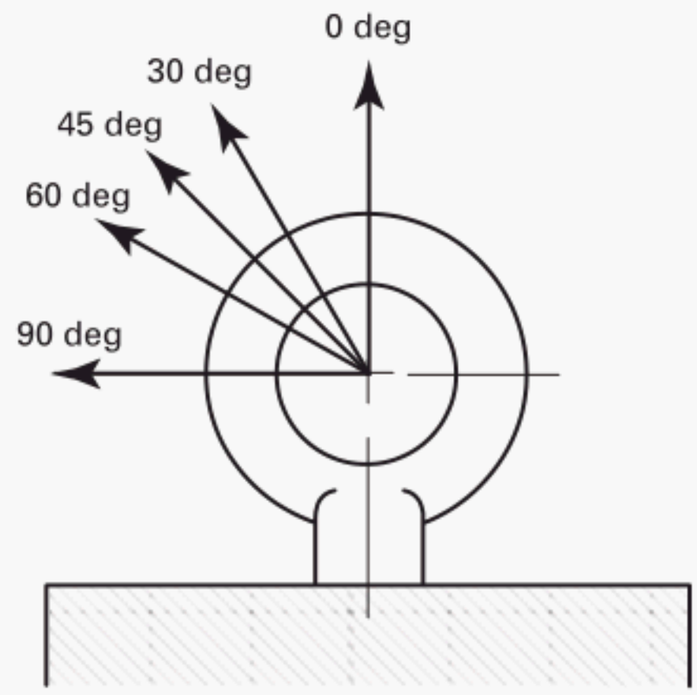

Nominal Size Metric	Nominal Size Inch Blank [Note (1)]	Carbon, Alloy Steel, and Corrosion-Resistant Stainless Steel Rated Rigger's Capacity, lb [Notes (1)–(4)]				
		0 deg	30 deg	45 deg	60 deg	90 deg
M6	1/4	460	NR	NR	NR	NR
M7	5/16	815	NR	NR	NR	NR
M8	3/8	990	NR	NR	NR	NR
M10	7/16	1,630	NR	NR	NR	NR
M12	1/2	2,260	NR	NR	NR	NR
M14	9/16	3,520	NR	NR	NR	NR
M16	5/8	3,520	NR	NR	NR	NR
M18	3/4	4,710	NR	NR	NR	NR
M20	7/8	6,290	NR	NR	NR	NR
M22	1	6,290	NR	NR	NR	NR
M24	1	8,470	NR	NR	NR	NR
M27	1 1/8	11,440	NR	NR	NR	NR
M30	1 1/4	14,080	NR	NR	NR	NR
M36	1 1/2	19,735	NR	NR	NR	NR
M42	1 5/8	26,310	NR	NR	NR	NR
M45	1 3/4	27,985	NR	NR	NR	NR
M48	2	36,080	NR	NR	NR	NR
M52	2	38,060	NR	NR	NR	NR
M64	2 1/2	53,930	NR	NR	NR	NR

NOTES:

(1) Inch blanks are listed for machining to add metric threads. Metric to inch cross reference was derived from supplier catalogs. ASME makes no claim as to the correctness. Not all inch sizes may be standard production or available for adding metric threads. Suppliers should be consulted prior to attempting procurement.

(2) Warning: There are no loads given for inch blanks to be used with metric threads for plain pattern eyebolts in supplier catalogs. Zero-deg load is as listed by various supplier catalogs for inch plain pattern eyebolts with metric threads for shoulder eyebolts. While plain pattern and shoulder eyebolts should have the same load capacity at 0 deg, ASME makes no claim to the validity of any load values on plain pattern in this Table. Suppliers should be consulted. Side (angular) loading of plain pattern eyebolts is not recommended for any size. Extreme caution should be taken when side loading these eyebolts.

(3) Primary consideration for the use of stainless steel is its anticorrosion characteristics. Strength is the secondary consideration. Therefore, while calculations determine that stainless steel to ASTM A473 has higher mechanical properties than ASTM A489, ASME does not list stainless steel with capacities higher than carbon steel capacities.

(4) See Nonmandatory Appendix A for information regarding the use of rigger's capacity.

Table D-2 Type 2, Metric Shoulder Pattern Eyebolt

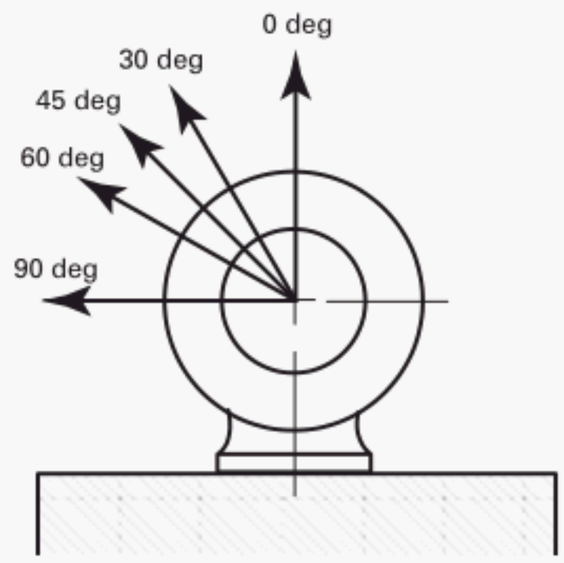

Nominal Size	Nominal Size Inch Blank [Note (1)]	Carbon, Alloy Steel, and Corrosion-Resistant Stainless Steel Rigger's Rated Capacity, lb [Notes (1)–(4)]				
		0 deg	30 deg	45 deg	60 deg	90 deg
M6	1/4	460	276	138	115	92
M7	5/16	815	489	245	204	163
M8	3/8	990	594	297	248	198
M10	7/16	1,630	978	489	408	326
M12	1/2	2,260	1,356	678	565	452
M14	9/16	3,520	2,112	1,056	880	704
M16	5/8	3,520	2,112	1,056	880	704
M18	3/4	4,710	2,826	1,413	1,178	972
M20	7/8	6,290	3,774	1,887	1,573	1,258
M22	1	6,290	3,774	1,887	1,573	1,258
M24	1	8,470	5,082	2,541	2,118	1,694
M27	1 1/8	11,440	6,864	3,432	2,860	2,288
M30	1 1/4	14,080	8,448	4,224	3,520	2,816
M36	1 1/2	19,735	11,841	5,921	4,934	3,947
M42	1 5/8	26,310	15,786	7,893	6,578	5,262
M45	1 3/4	27,985	16,791	8,396	6,996	5,597
M48	1 7/8	36,080	21,648	10,824	9,020	7,216
M52	2	38,060	22,836	11,418	9,515	7,612
M64	2 1/2	53,930	32,358	16,179	13,483	10,786

NOTES:

(1) Inch blanks are listed for machining to add metric threads. Metric to inch cross reference was derived from supplier catalogs. ASME makes no claim as to the correctness. Not all inch sizes may be standard production or available for adding metric threads. Suppliers should be consulted prior to attempting procurement.

(2) Warning: Zero-deg load is as listed by various supplier catalogs. ASME makes no claim to the validity of any load values in this Table. Side (angular) loads were calculated by ASME, but suppliers should be consulted. Extreme caution should be taken when side loading any eyebolt.

(3) Primary consideration for the use of stainless steel is its anticorrosion characteristics. Strength is the secondary consideration. Therefore, while calculations determine that stainless steel to ASTM A473 has higher mechanical properties than ASTM A489, ASME does not list stainless steel with capacities higher than carbon steel capacities.

(4) See Nonmandatory Appendix A for information regarding the use of rigger's capacity.

ASME B18.15-2015

ISBN 978-0-7918-7019-8

9 780791 870198

M03715