ASME A17.4-2015
(Revision of ASME A17.4-1999)

Guide for Emergency Personnel

(Includes Evacuation Procedures and Firefighters' Service Operating Procedures)

AN AMERICAN NATIONAL STANDARD

The American Society of Mechanical Engineers

Copyright © 2015 by the American Society of Mechanical Engineers.
No reproduction may be made of this material without written consent of ASME.

ASME A17.4-2015
(Revision of ASME A17.4-1999)

Guide for Emergency Personnel

(Includes Evacuation Procedures and Firefighters' Service Operating Procedures)

AN AMERICAN NATIONAL STANDARD

The American Society of Mechanical Engineers
Two Park Avenue • New York, NY • 10016 USA

Copyright © 2015 by the American Society of Mechanical Engineers.
No reproduction may be made of this material without written consent of ASME.

Date of Issuance: February 20, 2015

The next edition of this Guide is scheduled for publication in 2019.

Errata to codes and standards may be posted on the ASME Web site under the Committee Pages to provide corrections to incorrectly published items, or to correct typographical or grammatical errors in codes and standards. Such errata shall be used on the date posted.

The Committee Pages can be found at http://cstools.asme.org/. There is an option available to automatically receive an e-mail notification when errata are posted to a particular code or standard. This option can be found on the appropriate Committee Page after selecting "Errata" in the "Publication Information" section.

ASME is the registered trademark of The American Society of Mechanical Engineers.

This Guide was developed under procedures accredited as meeting the criteria for American National Standards. The Standards Committee that approved the Guide was balanced to assure that individuals from competent and concerned interests have had an opportunity to participate. The proposed Guide was made available for public review and comment that provides an opportunity for additional public input from industry, academia, regulatory agencies, and the public-at-large.

ASME does not "approve," "rate," or "endorse" any item, construction, proprietary device, or activity.

ASME does not take any position with respect to the validity of any patent rights asserted in connection with any items mentioned in this document, and does not undertake to insure anyone utilizing a standard against liability for infringement of any applicable letters patent, nor assumes any such liability. Users are expressly advised that determination of the validity of any such patent rights, and the risk of infringement of such rights, is entirely their own responsibility.

Participation by federal agency representative(s) or person(s) affiliated with industry is not to be interpreted as government or industry endorsement of this Guide.

No part of this document may be reproduced in any form,
in an electronic retrieval system or otherwise,
without the prior written permission of the publisher.

The American Society of Mechanical Engineers
Two Park Avenue, New York, NY 10016-5990

Copyright © 2015 by
THE AMERICAN SOCIETY OF MECHANICAL ENGINEERS
All rights reserved
Printed in U.S.A.

Copyright © 2015 by the American Society of Mechanical Engineers.
No reproduction may be made of this material without written consent of ASME.

CONTENTS

Foreword v
Committee Roster vi

Part I **Evacuation Procedures** 1
Section 1.1 Introduction 1
Section 1.2 Rescue Team Organization and Training 1
Section 1.3 Evacuation Procedures 4
Section 1.4 Rescue Following an Earthquake or Other Catastrophe 14
Section 1.5 Elevator System Lockdown 16

Part II **Firefighters' Service Operating Procedures** 17
Section 2.1 A Brief History of the Evolution of Firefighters' Service or Firefighters' Emergency Operation 17
Section 2.2 Communication Systems 19
Section 2.3 Firefighters' Emergency Operation and How it Works Today 20

Part III **Emergency/Standby Power Operation** 27
Section 3.1 History 27
Section 3.2 Operation 27

Nonmandatory Appendix
A Summary of Firefighters' Emergency Operation (ASME A17.1-2010/CSA B44-10) 29

Figures
1.2.1 Rescue Team and Equipment 3
1.3.3 Car at or Near Landing 5
1.3.4(a) Car Within 3 ft of Landing 6
1.3.4(b) Use of Hoistway Door-Unlocking Device 7
1.3.4(c) Opening of Car Door by Hand (Not Possible on Some Elevators) 8
1.3.4(d) Opening Hoistway Door by Hand (Not Possible on Some Elevators) 9
1.3.4(e) Guarding of Hoistway Opening Below the Car 10
1.3.4(f) Proper Use of Forcible Entry Tool 11
1.3.5(a) Use of Top Emergency Exit 13

Copyright © 2015 by the American Society of Mechanical Engineers.
No reproduction may be made of this material without written consent of ASME.

1.3.5(b) Evacuation Bridge in Between Side Emergency Exits 15
2.3.1.1 Fire Recall Key Switches and Markings 21
2.3.2.1 Phase I Emergency Recall Operation Instructions 23
2.3.2.2 Fire Operation Key Switch in Firefighters' Operation Cabinet 24

Table

A-1 Summary of Firefighters' Emergency Operation (ASME A17.1-2010/CSA B44-10) 29

Copyright © 2015 by the American Society of Mechanical Engineers.
No reproduction may be made of this material without written consent of ASME.

FOREWORD

Since 1921, The American Society of Mechanical Engineers (ASME) has developed and published safety codes and standards for elevators, escalators, and related equipment.

In the 1960s, a demand from many building owners, lessees, and operating managements emphasized a need for a guide for the evacuation of passengers from stalled elevator cars. To meet this need relating to safety, the A17 Executive Committee initiated a project of study that resulted in the development of the A17 Guide for the Evacuation of Passengers From Stalled Elevator Cars. This first edition was endorsed by the A17 Standards Committee in December 1972 and was published in 1973.

Since the publication of the first edition of the Guide, changes to the A17.1 Safety Code for Elevators and Escalators prompted the ASME A17 Committee to revise the Guide and keep it updated with new editions. The procedures contained in this Guide are based on past or current A17.1 editions and do not take into account any local jurisdictional revisions that may have been made.

The following is a list of approval dates and dates of issuance of all of the editions of the Guide:

Edition	Approved	Issued
A17 Guide	December 1972	1973
A17.4–1986	July 28, 1986	October 31, 1986
A17.4–1991	October 7, 1991	May 15, 1992
A17.4–1999	October 20, 1999	December 20, 1999
A17.4–2015	January 8, 2015	February 20, 2015

Acknowledgment. We gratefully acknowledge the Massachusetts Firefighting Academy for providing the photographs used in this Guide.

Copyright © 2015 by the American Society of Mechanical Engineers.
No reproduction may be made of this material without written consent of ASME.

ASME A17 ELEVATOR AND ESCALATOR COMMITTEE

(June 2014)

STANDARDS COMMITTEE

H. E. Peelle III, *Chair*
R. A. Gregory, *Vice Chair*
C. W. Rogler, *Vice Chair*
G. A. Burdeshaw, *Staff Secretary*

E. V. Baker, IUEC
M. Morand, Alternate, EIWPF

T. D. Barkand, U.S. Department of Labor

R. E. Baxter, Baxter Residential Elevators, LLC
K. S. Lloyd, Jr., Alternate, Abell Elevator International

L. Bialy, Otis Elevator Co.

B. D. Black, BDBlack & Associates

J. R. Brooks, Wagner Consulting

G. A. Burdeshaw, The American Society of Mechanical Engineers

J. W. Coaker, Coaker & Co., PC

J. Filippone, Port Authority of New York and New Jersey
J. H. Humphrey, Alternate, Port Authority of New York and New Jersey

C. C. Fox, Rainbow Security Control Ltd.
B. D. Fox, Alternate, Fox & Sons Quality Elevator Inspection

G. W. Gibson, George W. Gibson & Associates, Inc.
R. S. Seymour, Alternate, Robert L. Seymour & Associates, Inc.

R. A. Gregory, Vertex Corp.

R. F. Hadaller, Technical Standards and Safety Authority
M. Tevyaw, Alternate, Technical Standards and Safety Authority

P. Hampton, ThyssenKrupp Elevator
R. J. Walker, Alternate, ThyssenKrupp Elevator Manufacturing, Inc.

J. T. Herrity, U.S. Department of the Navy

D. A. Kalgren, Kone, Inc.
D. S. Boucher, Alternate, Kone, Inc.

J. W. Koshak, Elevator Safety Solutions, Inc.
H. Simpkins, Alternate, ThyssenKrupp Elevator

Z. R. McCain, Jr., McCain Engineering Associates, Inc.
M. V. Farinola, Alternate, MV Farinola, Inc.

D. McColl, Otis Canada, Inc.

J. L. Meyer, National Elevator Inspection Services

H. E. Peelle III, The Peelle Company
S. P. Reynolds, Alternate, The Peelle Company

Copyright © 2015 by the American Society of Mechanical Engineers.
No reproduction may be made of this material without written consent of ASME.

A. Rehman, Schindler Elevator Corp.

V. P. Robibero, Schindler Elevator Corp.
J. Carlson, Alternate, Schindler Elevator Corp.

C. W. Rogler, State of Michigan Elevator Safety Division

D. M. Stanlaske, NAESA International
J. R. Runyan, Alternate, Retired

D. L. Turner, Davis L. Turner & Associates, LLC
R. S. Caporale, Alternate, Elevator World, Inc.

A. H. Verschell, Dwan Elevator

D. A. Witham, GAL Manufacturing Corp.
J. Varon, Alternate, GAL Manufacturing Corp.

Ex Officio Members

G. A. Burdeshaw, *Staff Secretary*
R. E. Baxter
L. Bialy
B. D. Black
B. Blackaby
K. L. Brinkman
J. R. Carrick
W. D. George
N. B. Martin
D. McColl
H. E. Peelle III
J. S. Rearick
H. Simpkins
D. L. Turner
D. Witt

Honorary Members

G. A. Burdeshaw, *Staff Secretary*
L. J. Blaiotta
E. A. Donoghue
H. E. Godwin, Jr.
C. E. Hempel
C. L. Kort
A. A. Mascone
E. M. Philpot
R. L. Rogers
L. E. White

Regulatory Advisory Council

G. A. Burdeshaw, *Staff Secretary*
D. McLellan, *Secretary*
G. Antona
G. Barnes
J. L. Borwey
J. H. Burpee
J. R. Calpini
P. Caploon
R. Capuani
J. Day
N. C. Dimitruck
M. Dorosk
C. Gardiner
L. A. Giovannetti
J. M. Gould
A. N. Griffin
R. F. Hadaller
W. J. Hartung
S. J. Hickory
D. Holmes
G. Johnson
R. E. Kaspersma
D. Leonard
C. C. Mann
M. J. Mellon, Jr.
I. D. Mercer
S. Mercier
K. P. Morse
M. E. Pedersen
M. R. Poulin
W. Reinke
J. P. Roche
C. W. Rogler
A. Smith
D. M. Stanlaske
J. Stewart
M. K. Stewart
S. F. Stout
D. Tudor
L. E. Watson
W. C. Watson
W. J. Witt
D. L. Barker, *Alternate*
D. Melvin, *Alternate*

Copyright © 2015 by the American Society of Mechanical Engineers.
No reproduction may be made of this material without written consent of ASME.

NATIONAL INTEREST REVIEW COMMITTEE

G. A. Burdeshaw, *Staff Secretary*
J. P. Andrew
D. M. Begue
R. J. Blatz
M. T. Brierley
B. B. Calhoun
J. A. Caluori
C. S. Carr
M. A. Chavez
R. F. Dieter
B. Faerber
H. S. Frank
J. G. Gerk
L. A. Giovannetti
J. M. Gould
S. H. Grainer
N. R. Herchell
J. E. Herwig
R. Howkins
J. M. Imgarten
J. Inglis
T. Isaacs
F. A. Kilian
M. Krstanoski
M. L. Lane
W. R. Larsen
M. A. Malek
J. J. Mancuso
C. C. Mann
N. E. Marchitto
D. Mason
J. L. Meyer
T. S. Mowrey
F. G. Newman
J. W. O'Boyle
J. J. O'Donoghue
B. Peyton
M. J. Pfeiffer
M. R. Poulin
P. M. Puno
L. S. Rigby
J. R. Runyan
R. D. Schloss
S. Shanes
J. L. Stabler
D. M. Stanlaske
D. A. Swerrie
L. M. Taylor
Q. J. Xiong

B44.1/A17.5 ELEVATOR AND ESCALATOR ELECTRICAL EQUIPMENT COMMITTEE

M. L. Hite, *Chair*
J. L. Della Porta, *Vice Chair*
G. A. Burdeshaw, *Staff Secretary*
M. Dodd, *Secretary*
P. D. Barnhart
J. W. Blain
J. D. Busse
J. Caldwell
D. A. Donner
B. T. Irmacher
J. Lee
R. A. MacKenzie
B. J. Mierzejewski
M. Mihai
M. A. Mueller
J. H. Shull
R. S. Williams
A. Zemanek
P. F. McDermott, *Alternate*
B. Shah, *Alternate*
O. Simonetta, *Alternate*

CODE COORDINATION COMMITTEE

B. D. Black, *Chair*
G. A. Burdeshaw, *Staff Secretary*
L. Bialy
R. Bukowski
P. Caploon
R. Cote
G. W. Gibson
J. W. Koshak
V. P. Robibero
B. Tubbs
J. Blain, *Alternate*
K. Paarlberg, *Alternate*

DUMBWAITER AND ATD COMMITTEE

D. Witt, *Chair*
J. B. Peskuski, *Vice Chair*
R. Mohamed, *Staff Secretary*
R. A. Gregory
R. Helps
B. P. McCune

Copyright © 2015 by the American Society of Mechanical Engineers.
No reproduction may be made of this material without written consent of ASME.

EARTHQUAKE SAFETY COMMITTEE

B. Blackaby, *Chair*
W. C. Schadrack III, *Vice Chair*
M. Gerson, *Staff Secretary*
L. C. Barulich
G. W. Gibson
A. Jahn
R. Lorenzo
J. L. Meyer
W. C. Ribeiro
A. J. Schiff
A. J. Shelton
M. J. Smith
R. Taylor
D. A. Kalgren, *Alternate*
R. D. Shepherd, *Alternate*

EDITORIAL COMMITTEE

G. A. Burdeshaw, *Staff Secretary*
B. D. Black
J. Filippone
D. McColl

ELECTRICAL COMMITTEE

B. Blackaby, *Chair*
J. Caldwell, *Vice Chair*
D. Henderson, *Vice Chair*
C. Ramcharran, *Staff Secretary*
T. D. Barkand
P. D. Barnhart
S. H. Benjamin
J. W. Blain
J. D. Busse
S. J. Carlton
B. C. Castillo
J. L. Della Porta
J. P. Donnelly
R. Elias
S. E. Fisher
W. J. Hartung
G. N. Henry
M. L. Hite
Y. C. Ho
J. Kleine
P. F. McDermott
M. Mihai
P. Ojapalo
B. Ortiz
A. L. Peck
D. K. Prince
P. M. Puno
V. P. Robibero
M. Stergulc
S. P. Wood
J. C. Carlson, *Alternate*
P. C. Hoppie, *Alternate*
S. D. Larson, *Alternate*
C. Mason, *Alternate*
B. J. Mierzejewski, *Alternate*

ELEVATORS USED FOR CONSTRUCTION COMMITTEE

C. W. Rogler, *Chair*
G. A. Burdeshaw, *Staff Secretary*
R. E. Baxter
C. C. Fox
R. A. Gregory
G. W. Kosinski
J. A. Lowery, Jr.
N. B. Martin

EMERGENCY OPERATIONS COMMITTEE

C. Koenig, *Chair*
B. D. Black, *Vice Chair*
C. Ramcharran, *Staff Secretary*
M. Abbott
D. R. Beste
T. Bitz
M. T. Brierley
M. W. Bunker, Jr.
C. Burch
P. Caploon
J. C. Carlson
G. B. Cassini
D. Cook
R. B. Fraser
D. Henderson
D. Holmes
B. T. Irmscher
S. R. James
J. Latham
J. A. Marinelli
M. Martin
D. McColl
S. A. Morse
C. H. Murphy
T. F. Norton
J. J. O'Donoghue
B. F. O'Neill
D. K. Prince
P. D. Rampf
A. Rehman
L. F. Richardson
M. Tevyaw
D. Warne
S. Weiss-Ishai
D. J. Winslow
K. Broughton, *Alternate*
R. F. Hadaller, *Alternate*
J. K. O'Donnell, *Alternate*
G. G. Rees, *Alternate*
R. Reiswig, *Alternate*
R. J. Roux, *Alternate*
J. W. Stockstill, *Alternate*
D. A. Witham, *Alternate*

Copyright © 2015 by the American Society of Mechanical Engineers.
No reproduction may be made of this material without written consent of ASME.

ESCALATOR AND MOVING WALK COMMITTEE

T. R. Nurnberg, *Chair*
D. L. Turner, *Vice Chair*
R. Mohamed, *Staff Secretary*
P. R. Bothwell
S. Broder
P. L. Edwards
D. R. Evans
J. A. Fernandez Fidalgo
J. Filippone
J. G. Gerk
R. A. Glanzmann
H. A. Hausmann
R. Herndobler
J. A. Kinahan
T. F. Martel
D. McLellan
R. D. Shepherd
R. C. Shumate
K. J. Smith
J. L. Stabler
P. Velasquez, Jr.
P. J. Welch
D. Winkelhake
C. Anayiotos, *Alternate*
C. Banks, *Alternate*
C. S. Carr, *Alternate*
K. G. Hamby, *Alternate*
T. P. Kenny, *Alternate*
T. Lee, *Alternate*
D. E. Rush, *Alternate*

EXISTING INSTALLATIONS COMMITTEE

J. S. Rearick, *Chair*
D. B. Labrecque, *Vice Chair*
M. Gerson, *Staff Secretary*
R. E. Baxter
J. Bera
J. M. Block
C. A. Buckley
J. H. Butler
J. D. Carlisle, Jr.
G. B. Cassini
C. J. Duke
A. T. Gazzaniga
J. G. Gerk
R. A. Gregory
J. T. Herrity
J. A. Jaudes
R. Kremer
K. S. Lloyd, Jr.
G. M. Losey
Z. R. McCain, Jr.
P. McPartland
N. R. Mistry
R. C. Morrical
G. Nyborg III
S. A. Quinn
P. Reid
A. J. Saxer
R. D. Shepherd
J. L. Stabler
G. Stiffler
H. M. Vyas
T. Waardenburg
P. J. Welch
E. A. Heath III, *Alternate*
D. Keller, *Alternate*
V. P. Robibero, *Alternate*
D. J. Winslow, *Alternate*

GUIDE FOR EMERGENCY PERSONNEL COMMITTEE

D. L. Turner, *Chair*
R. S. Seymour, *Vice Chair*
G. A. Burdeshaw, *Staff Secretary*
J. R. Brooks
R. S. Caporale
D. Cook
D. L. Flint
C. C. Fox
J. L. Meyer
J. J. O'Donoghue
C. W. Rogler

HAND AND SIDEWALK ELEVATOR COMMITTEE

N. J. Montesano, *Chair*
R. S. Caporale, *Vice Chair*
G. A. Burdeshaw, *Staff Secretary*
V. G. Bahna
R. Carter
J. Doyle
J. Duffy
G. Greenberg
E. L. Krull, Jr.
C. Robinson
G. West
B. Casas, *Alternate*

Copyright © 2015 by the American Society of Mechanical Engineers.
No reproduction may be made of this material without written consent of ASME.

HOISTWAY COMMITTEE

D. McColl, *Chair*
S. P. Reynolds, *Vice Chair*
C. Ramcharran, *Staff Secretary*
B. D. Black
L. J. Blaiotta, Jr.
D. S. Boucher
C. Burch
A. S. Conkling
G. W. Gibson
H. J. Gruszynski
R. F. Hadaller
J. L. Harding
E. A. Heath III
D. Holmes
B. T. Irmscher
J. A. Marinelli
S. A. Morse
G. L. Nuschler
H. E. Peelle III
A. Rehman
H. Simpkins
D. Warne
S. Weiss-Ishai
L. C. Woods
W. Ziegert
L. Bialy, *Alternate*
L. J. Blaiotta, Sr., *Alternate*
F. R. Cooper, *Alternate*
D. Henderson, *Alternate*
W. M. Miller, *Alternate*
D. K. Quinn, *Alternate*
M. Tevyaw, *Alternate*
D. A. Witham, *Alternate*

HYDRAULIC COMMITTEE

H. Simpkins, *Chair*
C. B. Jackson, *Vice Chair*
G. A. Burdeshaw, *Staff Secretary*
D. M. Begue
L. Bialy
S. A. Bruno
P. E. Burge
C. C. Fox
H. A. Hammerstrom
R. S. Hultstrom
A. Jahn
M. G. Miller
T. S. Mowrey
M. J. Paschke
A. Rehman
L. S. Rigby
C. W. Rogler
J. L. Shrum
B. Giddens, *Alternate*
K. A. Grunden, *Alternate*
J. W. Koshak, *Alternate*
A. M. McClement, *Alternate*
W. M. Shrum, Jr.Alternate

INCLINED ELEVATOR COMMITTEE

J. R. Carrick, *Chair*
A. H. Verschell, *Vice Chair*
G. A. Burdeshaw, *Staff Secretary*
J. T. Herrity
J. Rearick

INSPECTIONS COMMITTEE

J. Filippone, *Chair*
M. Tevyaw, *Vice Chair*
R. Mohamed, *Staff Secretary*
G. Antona
C. Archer
R. E. Baxter
J. L. Borwey
J. R. Brooks
C. Buckley
J. W. Coaker
P. Donigain
C. Duke
M. V. Farinola
H. S. Frank
K. Garst
R. F. Hadaller
P. Hampton
J. T. Herrity
R. S. Hultstrom
J. J. Knolmajer
G. W. Kosinski
Z. R. McCain, Jr.
J. S. Rearick
A. Rehman
C. P. Robinson
C. W. Rogler
J. D. Rosenberger
J. R. Runyan
R. D. Schloss
R. S. Seymour
R. D. Shepherd
W. M. Snyder
D. M. Stanlaske
J. Strzelec
D. Warne
D. Winslow
P. G. Bender, *Alternate*
M. Boutin, *Alternate*
C. S. Carr, *Alternate*
D. McLellan, *Alternate*
M. D. Morand, *Alternate*
F. C. Slater, *Alternate*
J. L. Stabler, *Alternate*
S. Swett, *Alternate*

Copyright © 2015 by the American Society of Mechanical Engineers.
No reproduction may be made of this material without written consent of ASME.

INTERNATIONAL STANDARDS COMMITTEE (US TAG to TC 178)

L. Bialy, *Chair*
V. P. Robibero, *Vice Chair*
G. A. Burdeshaw, *Staff Secretary*
B. D. Black
B. Blackaby
R. S. Caporale
J. W. Coaker
G. W. Gibson
P. Hampton
J. T. Herrity
D. A. Kalgren
G. A. Kappenhagen
J. W. Koshak
D. McColl
J. A. Popp
J. Rearick
J. Strzelec
D. L. Turner
T. Derwinski, *Alternate*
D. R. Evans, *Alternate*
D. McKee, *Alternate*

LIMITED-USE/LIMITED-APPLICATION ELEVATOR COMMITTEE

R. E. Baxter, *Chair*
P. Chance, *Vice Chair*
M. Gerson, *Staff Secretary*
K. L. Brinkman
C. C. Fox
P. W. Lackler
S. J. Mehalko
R. J. Murphy
J. E. Newstrom
W. Richardson
J. P. Schumacher
F. C. Slater
A. H. Verschell
R. B. Weber
D. M. Winkle, Jr.

MAINTENANCE, REPAIR, AND REPLACEMENT COMMITTEE

R. A. Gregory, *Chair*
D. B. Labrecque, *Vice Chair*
M. Gerson, *Staff Secretary*
R. E. Baxter
J. M. Block
G. B. Cassini
J. J. DeLorenzi
C. J. Duke
M. V. Farinola
J. Filippone
J. G. Gerk
S. P. Greene
R. F. Hadaller
R. E. Haukeness
J. T. Herrity
A. S. Hopkirk
J. A. Jaudes
J. J. Knolmajer
R. Kremer
K. S. Lloyd, Jr.
G. M. Losey
Z. R. McCain, Jr.
D. McColl
C. McDilda
P. J. McPartland
J. L. Meyer
N. R. Mistry
M. D. Morand
R. C. Morrical
J. Murphy
W. B. Pletch
J. S. Rearick
A. Rehman
P. Reid
V. P. Robibero
P. S. Rosenberg
A. Saxer
R. D. Schloss
R. D. Shepherd
J. Strzelec
H. M. Vyas
T. Waardenburg
C. Buckley, *Alternate*
C. S. Carr, *Alternate*
E. A. Heath III, *Alternate*
D. Kelly, *Alternate*
J. L. Stabler, *Alternate*
D. J. Winslow, *Alternate*

MARINE ELEVATOR COMMITTEE

W. D. George, *Chair*
M. R. Tilyou, *Vice Chair*
G. A. Burdeshaw, *Staff Secretary*
D. Brady
E. J. Crawford
T. J. Ingram
H. Moran
R. Wagner

Copyright © 2015 by the American Society of Mechanical Engineers.
No reproduction may be made of this material without written consent of ASME.

MECHANICAL DESIGN COMMITTEE

L. Bialy, *Chair*
D. L. Turner, *Vice Chair*
R. J. Walker, *Vice Chair*
A. B. Byk, *Staff Secretary*
E. V. Baker
D. L. Barker
F. Belio
R. E. Creak
C. C. Fox
H. S. Frank
G. W. Gibson
R. F. Hadaller
B. W. Horne
D. A. Kalgren
R. E. Kaspersma
V. King
K. Konyar
J. W. Koshak
R. Kremer
M. P. Lamb
A. Rehman
M. Rhiner
H. Simpkins
C. E. Vlahovic
S. P. Wurth
S. Conrey, *Alternate*
R. K. Leckman, *Alternate*

MINE ELEVATOR COMMITTEE

N. B. Martin, *Chair*
M. Gerson, *Staff Secretary*
C. C. Adkins, Sr.
C. D. Barchet
T. D. Barkand
W. M. Dietz
P. E. Fernatt
W. M. Heimbuch
J. B. Ketchem
A. L. Martin
J. Moore
H. E. Newcomb
A. J. Saxer
M. P. Snyder
J. K. Taylor

NEW TECHNOLOGY COMMITTEE

L. Bialy, *Chair*
D. McColl, *Vice Chair*
A. L. Guzman, *Staff Secretary*
B. D. Black
S. Bornstein
R. S. Caporale
S. J. Carlton
T. M. Chambers
J. W. Coaker
M. Dodd
G. W. Gibson
A. N. Griffin
J. T. Herrity
D. A. Kalgren
R. E. Kaspersma
J. W. Koshak
G. W. Kosinski
J. L. Meyer
M. Mihai
M. Pedram
J. Rearick
V. P. Robibero
C. W. Rogler
D. Schroeter
J. H. Shull
D. W. Soos
D. L. Turner
R. E. Baxter, *Alternate*
M. Chan, *Alternate*
M. D. Morand, *Alternate*
O. Simonetta, *Alternate*

OUTSIDE EMERGENCY ELEVATOR COMMITTEE

G. L. Nuschler, *Chair*
B. D. Black
W. C. Christensen
R. F. Fahy
J. K. O'Donnell
J. J. O'Donoghue
H. E. Peelle III
J. Shimshoni
D. M. Stanlaske

Copyright © 2015 by the American Society of Mechanical Engineers.
No reproduction may be made of this material without written consent of ASME.

QUALIFICATION OF ELEVATOR INSPECTORS COMMITTEE

J. Brooks, *Chair*
M. Tevyaw, *Vice Chair*
G. Burdeshaw, *Staff Secretary*
E. V. Baker
R. E. Baxter
L. Bialy
B. Black
J. Coaker
J. Cosbey
D. L. Flint
G. W. Gibson
P. Hampton
J. T. Herrity
G. W. Kosinski
E. L. Krull, Jr.
J. A. Marchack
Z. R. McCain, Jr.
V. P. Robibero
C. P. Robinson
C. W. Rogler
J. R. Runyan
R. S. Seymour
D. M. Stanlaske
J. Strzelec
D. S. Warne
D. McLellan, *Alternate*
J. L. Meyer, *Alternate*
M. Morand, *Alternate*
D. Turner, *Alternate*
D. J. Winslow, *Alternate*

RACK AND PINION AND SPECIAL PURPOSE PERSONNEL ELEVATOR COMMITTEE

A. J. Marchant, *Chair*
S. Harris, *Vice Chair*
G. A. Burdeshaw, *Staff Secretary*
K. M. Harrison, *Secretary*
J. L. Borwey
T. A. Gross
R. E. Haukeness
R. E. Kaspersma
J. W. Koshak
S. D. Larson
R. C. Meiresonne
B. L. O'Neill
S. P. Wood, *Alternate*

RESIDENCE ELEVATOR COMMITTEE

K. L. Brinkman, *Chair*
A. H. Verschell, *Vice Chair*
M. Gerson, *Staff Secretary*
R. E. Baxter
P. Chance
P. Edwards
F. M. Hoch
S. D. Holat
C. S. Jones
L. Katz
T. C. Kingsley
P. W. Lackler
M. Lewis
J. C. Lund
W. M. McKinley
S. J. Mehalko
R. J. Murphy
J. E. Newstrom
T. L. Pope
W. Richardson
J. P. Schumacher
F. C. Slater
R. B. Weber
D. M. Winkle, Jr.
J. B. Peskuski, *Alternate*
J. Tometich, *Alternate*
G. Ziebell, *Alternate*

WIND TURBINE ELEVATOR COMMITTEE

J. Koshak, *Chair*
R. J. Gromek, *Vice Chair*
M. Gerson, *Staff Secretary*
J. L. Borwey
G. Brickell
J. R. Dunlop
S. H. Franklin
A. Freixas
K. Govaert
P. S. Grewal
J. J. Haigh
J. T. Herrity
R. S. Hultstrom
R. E. Kaspersma
G. J. Kolodziej
A. J. Marchant
K. Matharu
L. Metzinger
J. Rearick
G. A. Rogers
J. H. Shull
P. D. Smith
S. Swett
C. Vanhoutte
S. W. Weaver
R. Weinmuller
T. Westphal
L. Williams
C. Barrett, *Alternate*
C. E. Cuenin, *Alternate*
E. M. Elzinga, *Alternate*

Copyright © 2015 by the American Society of Mechanical Engineers.
No reproduction may be made of this material without written consent of ASME.

GUIDE FOR EMERGENCY PERSONNEL

PART I

EVACUATION PROCEDURES

SECTION 1.1
INTRODUCTION

It is recommended that any evacuation of passengers from elevator cars be performed under the direct supervision of elevator personnel, as their experience and expertise ensure the resourcefulness necessary to cope with the various complex hazards that may arise. However, in the event of an emergency, time may be of the essence in evacuating passengers, and waiting for elevator personnel may be impractical. Under emergency conditions, the passenger evacuation must be performed by personnel who are carefully selected and trained as described in this Guide.

Elevator personnel should also follow these procedures. However, due to their knowledge of elevator systems, they may utilize other procedures to safely evacuate passengers (e.g., move the car to a landing to allow egress through the elevator door).

CAUTION

Newer elevators may not be equipped with an in-car emergency stop switch, so utilizing the mainline disconnect with proper lockout/tagout procedures is extremely important.

SECTION 1.2
RESCUE TEAM ORGANIZATION AND TRAINING

1.2.1 Organization

In order to ensure that a rescue by people other than experienced elevator personnel is performed safely, the building management must select and train their employees in the proper evacuation procedures. A rescue team should be organized for each shift, with specific duties assigned to each member. Where this is impractical, the building management should coordinate with the local authorities responsible for rescue operations, such as the police department or

Copyright © 2015 by the American Society of Mechanical Engineers.
No reproduction may be made of this material without written consent of ASME.

fire department. The rescue teams must be similarly organized and trained. Training should always be done with experienced, qualified elevator personnel present.

Prior to attempting any rescue, it is imperative that the rescue team has the proper tools and equipment ready for use. It is equally important that they be trained in the proper use of the tools and equipment. Some of the tools and equipment that may be necessary to make a safe rescue are (see Fig. 1.2.1)

(a) short extension ladder (when using the top emergency exit, a short extension ladder may be helpful in assisting passengers going over the crosshead and for reaching the floor above the car)

(b) collapsible or folding ladder

(c) hoistway door-unlocking devices (elevator door interlock release keys)

(d) two-way radios or portable radios

(e) personnel fall arrest system

(f) lifelines

(g) forcible entry tools

(h) flashlights

(i) lockout/tagout equipment

(j) tool for poling (pike pole)

1.2.2 Training and Instruction

The rescue team should be given training in the proper procedures for evacuating passengers as required by ASME A17.1/CSA B44, requirement 8.6.11.5.4 to prepare them for actual emergency situations that may arise in the elevator operation at every building within their jurisdiction. In training personnel, advantage should be taken of the experience and expertise that may be provided by the elevator maintenance organization servicing the elevator equipment. Rescue drills should be planned to simulate various emergency conditions and should be conducted to determine the effectiveness of the rescue operation and organization. On observation elevators and elevators with nonenclosed hoistways, considerable preplanning may be necessary since conditions vary.

Written instructions on the steps to be taken to affect a rescue should be furnished to all personnel designated and trained to perform rescue duties. These instructions must also be in a location known and accessible to the rescue team, where they can be readily referred to during an evacuation, if necessary. These instructions should include the telephone numbers of persons or organizations to be contacted for assistance, e.g., elevator maintenance personnel. The keys necessary for elevator evacuation are required by ASME A17.1/CSA B44 to be available to the rescue team. All required keys should be permanently labeled for function.

1.2.3 Lockout/Tagout Procedures

Whenever persons are being assisted from a stalled elevator car, adherence to strict lockout/tagout procedures must be followed. The mainline disconnect switch must be turned to the "OFF" position and a lock and tag installed on the disconnect switch in order to prevent anyone from turning the switch to the "ON" position. The mainline disconnect switch is typically located in the elevator machine room when a machine room is provided.

Copyright © 2015 by the American Society of Mechanical Engineers.
No reproduction may be made of this material without written consent of ASME.

Fig. 1.2.1 Rescue Team and Equipment

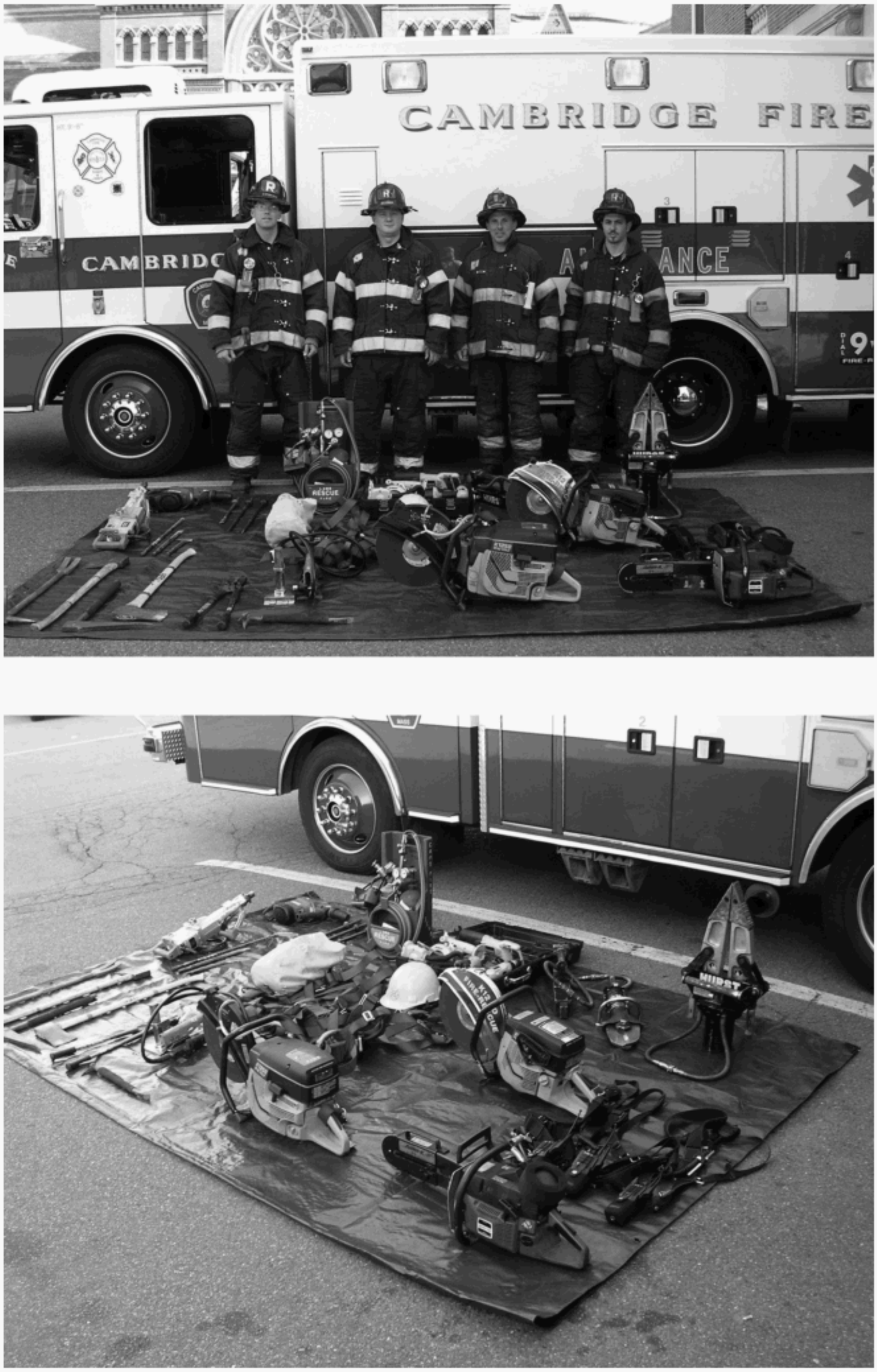

Copyright © 2015 by the American Society of Mechanical Engineers.
No reproduction may be made of this material without written consent of ASME.

1.2.4 Door Restrictors (Restricted Door Operation)

Many elevator car and/or landing doors are equipped with door restrictors to prevent opening of the car doors or landing doors from inside the car when the car is outside the unlocking zone. These devices are required by ASME A17.1/CSA B44 and ASME A17.3 to be installed in such a manner that the doors can be opened from outside the car without special tools. Emergency personnel should become familiar with how these devices can be opened from the landing before an actual emergency occurs.

SECTION 1.3
EVACUATION PROCEDURES

1.3.1 Communication

Prior to conducting an evacuation, the following steps should be taken:

(a) The responsible personnel in the building should immediately be stationed outside of the stalled elevator and communicate with the occupants of the elevator car to inform them that

(1) they are safe

(2) steps are being taken to evacuate them from the elevator car

(3) they should stand clear of doors since they may be opened

(4) they should refrain from smoking

(5) they should not attempt to exit the car

(b) In communicating with the occupants of the elevator car, the following information should be obtained for guidance in making decisions on actions to be taken in the rescue operation:

(1) the number of persons in the elevator car

(2) whether any of the occupants of the elevator car have an immediate medical concern

(3) whether the lights are on in the elevator car

(4) the location of the elevator car in the hoistway, if known

(c) One member of the rescue team should be stationed at the location of the elevator mainline disconnect to open or close the mainline disconnect switch as required by the evacuation team. Two-way communication should be maintained between these team members.

The rescue team should verify that these steps have been taken, and while the rescue operation is in progress, the occupants of the elevator car should continually be kept informed and reassured of their safety.

1.3.2 Assessment of Conditions

It is recognized that the preferred safe practice in evacuating passengers is to move the elevator car to a landing level. The procedures outlined herein do not require the movement of the elevator car by any means other than normal inspection or Phase I operation. The elevator car will not move if the safety circuit is open.

Copyright © 2015 by the American Society of Mechanical Engineers.
No reproduction may be made of this material without written consent of ASME.

Movement of the elevator car by any other means should be attempted only under the direct supervision of experienced elevator personnel.

Before utilizing any of these procedures, ascertain that the mainline disconnect switch is in the "ON" position (closed) and that the emergency stop switch, if the car is so equipped, is in the "RUN" position, not in the "STOP" position.

If the elevator is equipped with firefighters' service operation, try activating the Phase I lobby key switch to recall the elevator car to the main floor.

If the elevator car is stalled due to a loss of power to the building, and the building has a standby or emergency power source equipped to operate the elevators, it may be possible to run the elevators by turning the emergency recall switch in the main floor lobby to the "ON" position. Use the manual elevator standby power selection switch, if provided, to bring the elevator cars to the main floor, one by one.

If these methods do not work, determine the position of the elevator car as specified in 1.3.3 through 1.3.5 and continue with the evacuation procedure that is appropriate.

1.3.3 Procedure With Car at or Near a Landing

When an elevator car is located at or near a landing (see Fig. 1.3.3), it may be that the hoistway door is unlocked, and the hoistway and car doors can be opened by hand. Under these conditions, proceed as follows:

(a) Set the mainline disconnect switch for the stalled elevator in the "OFF" position. Lockout/tagout the mainline disconnect switch.

(b) Open the doors by hand.

Fig. 1.3.3 Car at or Near Landing

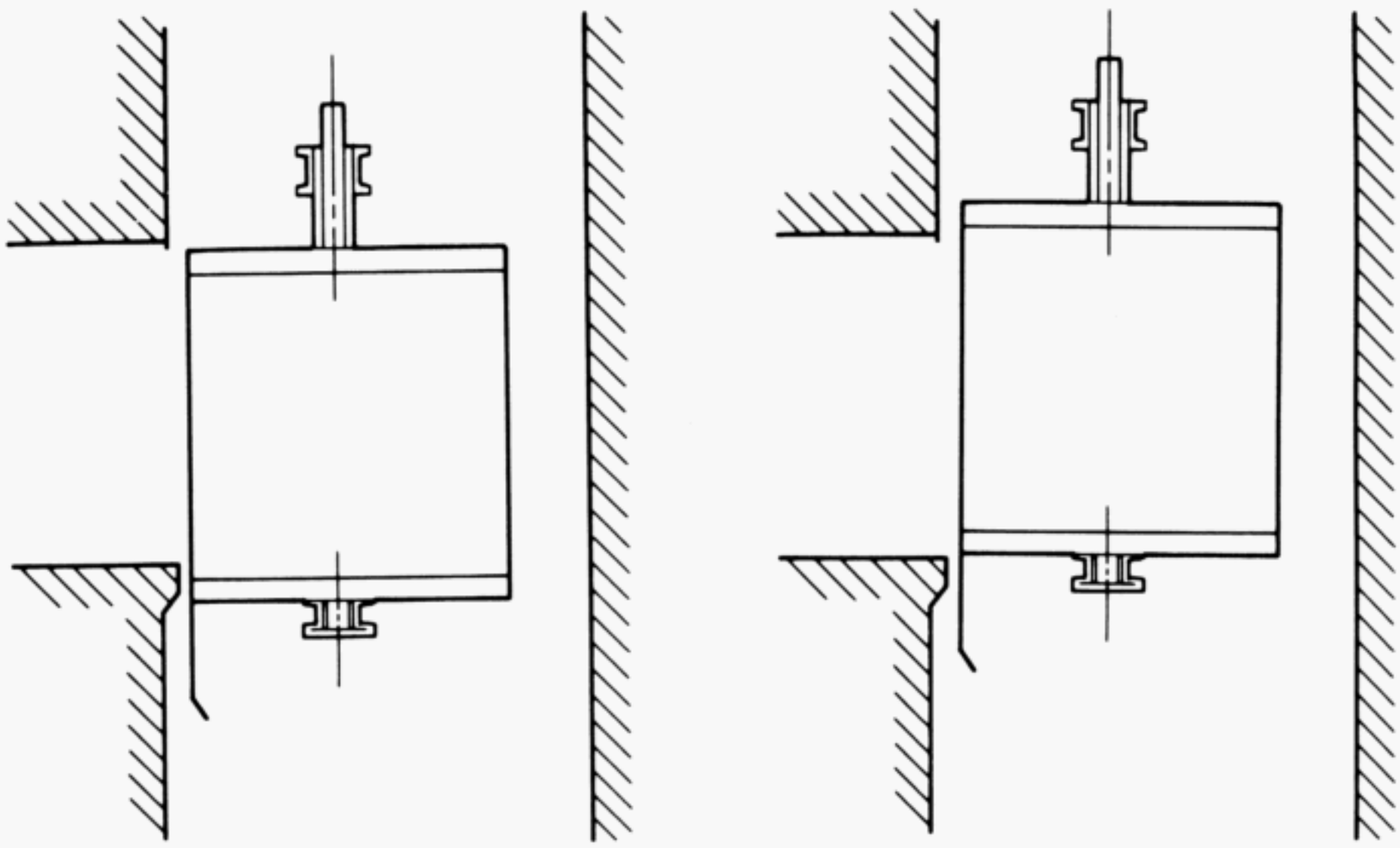

Copyright © 2015 by the American Society of Mechanical Engineers.
No reproduction may be made of this material without written consent of ASME.

(c) Enter the elevator car, and set the emergency stop switch, if the car is so equipped, in the "STOP" or "OFF" position. If the car is equipped with a key-operated, in-car stop switch, use the key, if available, to turn the switch to the "OFF" position.

(d) Assist the passengers in leaving the elevator car, one at a time. If the car is not level with the landing, make sure that the passengers do not trip or fall while leaving the car.

1.3.4 Procedure With Car Within 3 ft (914 mm) of Landing

When the hoistway doors are not unlocked and the elevator car floor (platform) is within 3 ft (914 mm) of the landing level [see Fig. 1.3.4(a)], the following methods of removing the passengers should be used:

(a) Opening Doors From Landing or From Inside Elevator Car

(1) Set the mainline disconnect switch for the stalled elevator in the "OFF" position. Lockout/tagout the mainline disconnect switch.

(2) Unlock the hoistway door at the floor nearest to the stalled elevator car by means of the hoistway door-unlocking device (elevator door interlock release key), if provided, and open the hoistway and car doors by hand [see Fig. 1.3.4(b)]. If hoistway door-unlocking devices are not provided, it may be possible on some installations for a passenger to manually open the car and hoistway doors from within the elevator car [see Figs. 1.3.4(c) and 1.3.4(d)]. If this is not possible, see 1.3.4(b).

(3) A member of the rescue party should then enter the elevator car and place the emergency stop switch, if the car is so equipped, in the "STOP" or "OFF"

Fig. 1.3.4(a) Car Within 3 ft of Landing

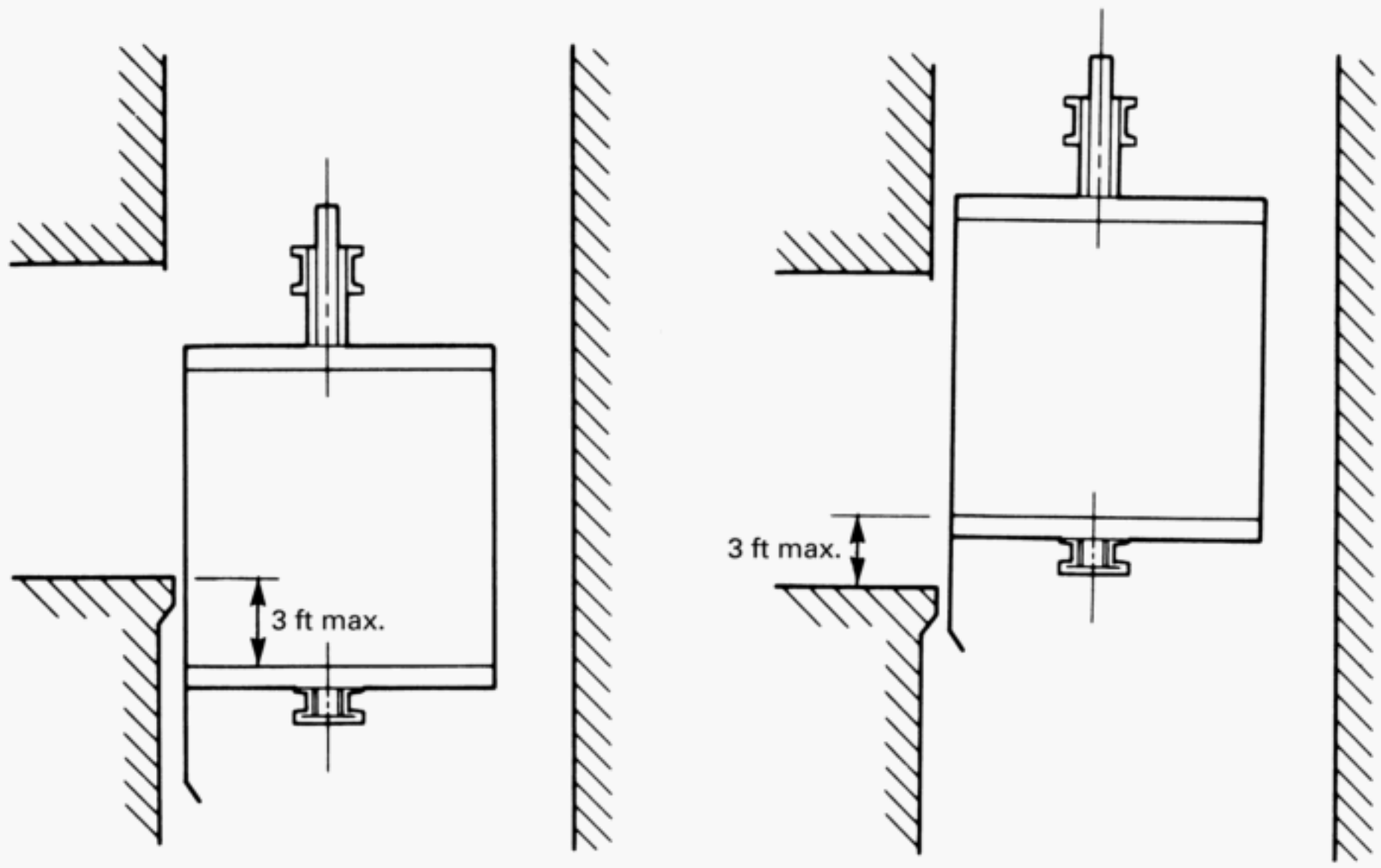

Copyright © 2015 by the American Society of Mechanical Engineers.
No reproduction may be made of this material without written consent of ASME.

Fig. 1.3.4(b) Use of Hoistway Door-Unlocking Device

position. If the stalled car is equipped with a key-operated, in-car stop switch, use the key, if available, to turn the switch to the "OFF" position. Where the in-car stop switch is located behind a locked panel, unlock the panel and activate the stop switch.

(4) The passengers should then be assisted from the stalled elevator car, one at a time, by rescue personnel located both in the car and on the landing. A sturdy stepladder or footstool should be used for safe removal. Precautions should be taken to guard any hoistway opening below the elevator car floor (platform) when the car is above the landing [see Fig. 1.3.4(e)]. A ladder, backboard, basket stretcher, or solid piece of furniture can be used for this purpose.

(b) Opening Doors From Adjacent Elevator Car. When a hoistway door-unlocking device (elevator door interlock release key) is not provided, or the doors cannot be opened from within the elevator car by the passengers, and an adjacent car is operable, the following procedures should be utilized:

(1) Take an adjacent elevator car to the floor closest to the stalled car and open its doors.

(2) Set the mainline disconnect switches for both the stalled elevator and the rescue elevator in the "OFF" position. Lockout/tagout the mainline disconnect switches. Also, place the emergency stop switch of the rescue elevator car, if the car is so equipped, in the "STOP" or "OFF" position. If the car is equipped with a key-operated, in-car stop switch, use the key, if available, to turn the switch to

Copyright © 2015 by the American Society of Mechanical Engineers.
No reproduction may be made of this material without written consent of ASME.

Fig. 1.3.4(c) Opening of Car Door by Hand (Not Possible on Some Elevators)

the "OFF" position. Where the in-car stop switch is located behind a locked panel, unlock the panel and place the stop switch in the "OFF" position.

(3) By extending a poling tool (pike pole) through the opening between the car and hoistway doors of the rescue elevator car, it may be possible on most types of elevator installations to engage the interlock roller of the stalled elevator car so that its doors can be opened by hand. When using this method, be careful not to extend the pole into the hoistway of any elevator that is still in service. If this is not possible, see 1.3.4(c).

(4) A member of the rescue team should then enter the stalled elevator car and set the emergency stop switch, if the car is so equipped, in the "STOP" or "OFF" position. If the car is equipped with a key-operated, in-car stop switch, use the key, if available, to turn the switch to the "OFF" position. Where the in-car stop switch is located behind a locked panel, unlock the panel and place the stop switch in the "OFF" position.

(5) The passengers should then be assisted from the stalled elevator car, one at a time, by rescue personnel located both in the car and on the landing. A sturdy stepladder or footstool should be used for safe removal. Precautions should be taken to guard any hoistway opening below the car floor (platform) when the

Copyright © 2015 by the American Society of Mechanical Engineers.
No reproduction may be made of this material without written consent of ASME.

Fig. 1.3.4(d) Opening Hoistway Door by Hand (Not Possible on Some Elevators)

elevator car is above the landing [see Fig. 1.3.4(e)]. A ladder, backboard, basket stretcher, or solid piece of furniture can be used for this purpose.

(c) Opening Doors With Forcible Entry Tool. Where the hoistway doors cannot be unlocked by an unlocking device or by other means, and an adjacent elevator in the same hoistway is not available, the hoistway door at the floor nearest to the stalled elevator car can be forcibly opened. Proceed as follows:

(1) Set the mainline disconnect switch for the stalled elevator in the "OFF" position. Lockout/tagout the mainline disconnect switch.

(2) Open the doors with the use of the forcible entry tool. For most newer elevators with center-opening doors, the forcible entry tool should be used at the top of the door where the doors meet; for those with side-opening doors, the tool should be used on the side the door closes into. This results in quicker release of the passengers and minimizes the overall damage so the elevator can be returned to service more quickly [see Fig. 1.3.4(f)].

(3) Some older elevators have a "broken arm" interlock and nothing at the top closing part of the door. It may be possible to check this at the lowest landing or on adjacent cars. In this situation, the forcible entry tool should be used at the approximate level where the broken arm attaches to the door, about center from

Copyright © 2015 by the American Society of Mechanical Engineers.
No reproduction may be made of this material without written consent of ASME.

Fig. 1.3.4(e) Guarding of Hoistway Opening Below the Car

the top to bottom where center-opening doors meet or where side-opening doors close. The arms usually do not conveniently "break" but continue bending as the door is forced open.

(4) A member of the rescue team should enter the elevator car and set the emergency stop switch, if the car is so equipped, in the "STOP" or "OFF" position. If the car is equipped with a key-operated, in-car stop switch, use the key, if available, to turn the switch to the "OFF" position. Where the in-car stop switch is located behind a locked panel, unlock the panel and activate the stop switch.

(5) The passengers should then be assisted from the stalled elevator car, one at a time, by rescue personnel located both in the car and on the landing. A sturdy stepladder or footstool should be used for safe removal. Precautions should be taken to guard any hoistway opening below the car floor (platform) when the elevator car is above the landing [see Fig. 1.3.4(e)]. Again, a ladder, backboard, basket stretcher, or solid piece of furniture can be used for this purpose.

1.3.5 Procedure With Car More Than 3 ft (914 mm) From Landing

When an elevator car is stalled so that the car floor (platform) is more than 3 ft (914 mm) above a landing level, it is inadvisable to remove the passengers through the elevator door opening, as the excessive distance between the car floor

Copyright © 2015 by the American Society of Mechanical Engineers.
No reproduction may be made of this material without written consent of ASME.

Fig. 1.3.4(f) Proper Use of Forcible Entry Tool

(platform) and landing level creates a danger due to the possibility that a passenger may fall into the hoistway. In addition, it is inadvisable to remove passengers through the elevator door opening when the car floor (platform) is more than about 3 ft (914 mm) below the landing level, since the reduced opening clearance makes exiting too difficult.

The recommended methods for removing the passengers under these conditions are as follows:

(a) Removal Through Top Emergency Exit

CAUTION:

Do not use the car top emergency exit on an elevator in an unenclosed hoistway. New elevators in unenclosed hoistways will not have top emergency exits. If exiting through the elevator entrance is not possible, have experienced elevator personnel move the elevator car to a landing level. The tops of elevator cars may have a lot of equipment, and secure footing may not be obvious. Additionally, debris can collect, along with dirt, oil, etc.

Copyright © 2015 by the American Society of Mechanical Engineers.
No reproduction may be made of this material without written consent of ASME.

(1) The mainline disconnect switches in the machine room for the stalled elevator and the adjacent elevators (if the stalled elevator car is located in a multiple hoistway) should be set in the "OFF" position. Lockout/tagout the mainline disconnect switch.

(2) The rescue team should open the hoistway door at the nearest landing or an emergency access door, where provided, above the stalled elevator car top. This entry can be made by the use of the hoistway door-unlocking device or the emergency door key, or by forcing open the hoistway doors.

(3) A ladder with nonskid feet should be lowered to the elevator car top and securely positioned on the elevator car top. This ladder should be of sufficient length to extend at least 3 ft (914 mm) above the landing floor [see Fig. 1.3.5(a)].

(4) One member of the rescue team, equipped with a personal fall arrest system and properly tied off to a secured lifeline, should descend to the top of the stalled elevator car. The top of car stop switch should be placed in the "STOP" position to ensure that the elevator will not move. A second ladder should be lowered through the top emergency exit and positioned between the elevator car floor and car top in order to safely transport the passengers to the car top.

(5) A second rescue team member, also equipped with a personal fall arrest system and properly tied off to a secured lifeline, should then descend to the car top. The team member should carry an additional personal fall arrest system for use in rescuing the passengers.

(6) One team member should then enter the stalled elevator car through the top emergency exit. The other rescue team member should remain on the top of the stalled elevator car. A third member should be at the landing used to gain access to the hoistway.

(7) The emergency stop switch in the stalled elevator car, if the car is so equipped, should be set in the "STOP" or "OFF" position. If the car is equipped with a key-operated, in-car stop switch, use the key, if available, to turn the switch to the "OFF" position. Where the in-car stop switch is located behind a locked panel, unlock the panel and place the stop switch in the "OFF" position.

(8) The passengers should then be assisted, one at a time, from within the elevator car to the car top, then to the landing above with the use of personal fall arrest systems and secured lifelines.

(b) Removal Using Side Emergency Exit, When an Adjacent Elevator With a Matching Side Emergency Exit Is Available.

CAUTION:

Due to the difficulty in lining up the adjacent openings, the following procedure should be used only if top emergency exits are not installed, there are experienced elevator personnel present, or the rescue team has been thoroughly trained in this procedure.

(1) Move the rescue car using the independent service, firefighters' service, or inspection mode to line up the floor of the rescue car with that of the stalled car.

Copyright © 2015 by the American Society of Mechanical Engineers.
No reproduction may be made of this material without written consent of ASME.

Fig. 1.3.5(a) Use of Top Emergency Exit

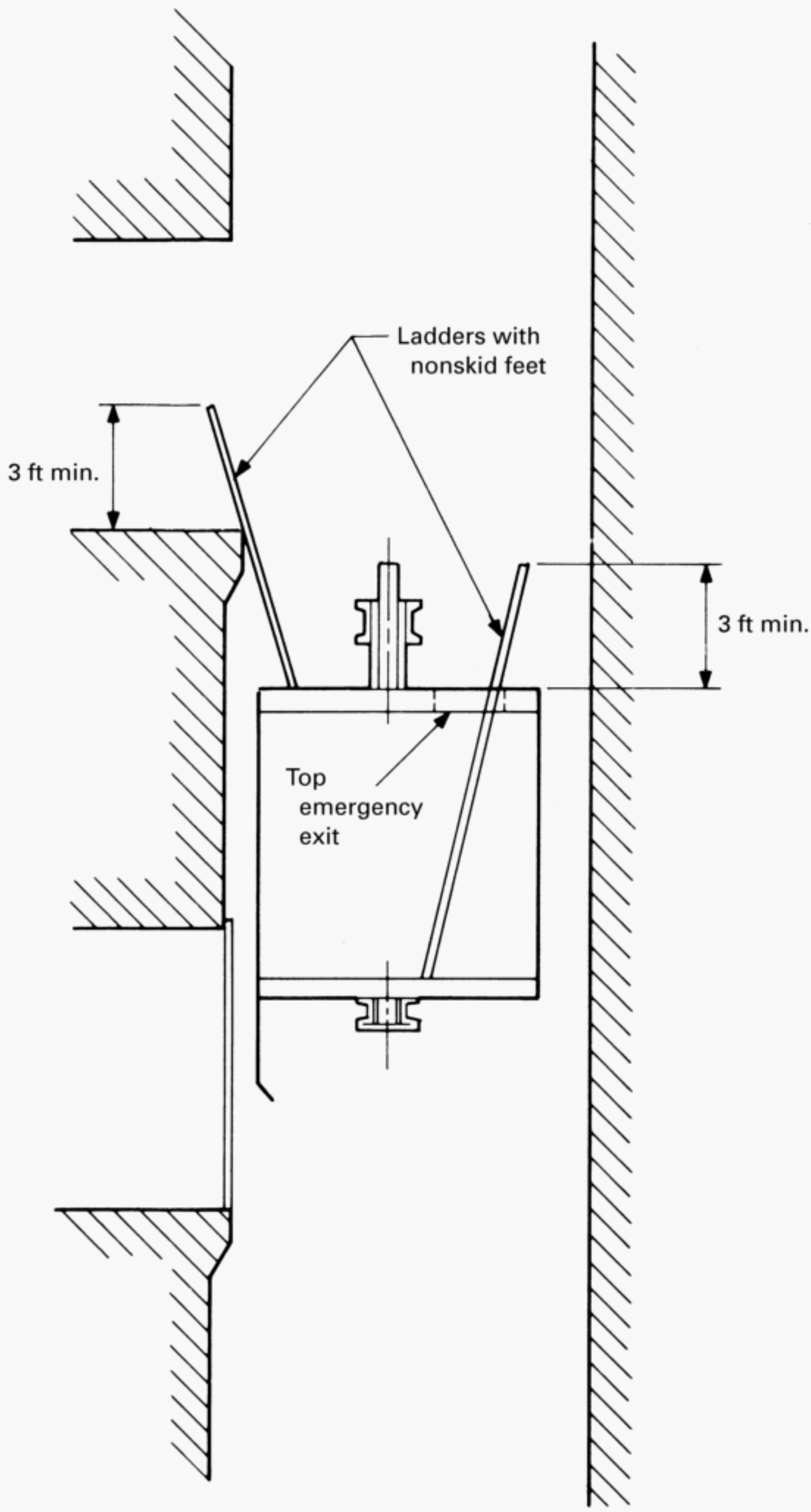

Copyright © 2015 by the American Society of Mechanical Engineers.
No reproduction may be made of this material without written consent of ASME.

(2) The mainline disconnect switches in the machine room for the stalled elevator and the rescue elevator should be set in the "OFF" position using proper lockout/tagout procedures.

(3) A member of the rescue team wearing a personal fall arrest system and properly tied off to a secured lifeline should enter the stalled elevator car through the side emergency exit.

(4) The emergency stop switch in the stalled elevator car and the rescue elevator car, if the cars are so equipped, should be set in the "STOP" or "OFF" position. If the cars are equipped with a key-operated, in-car stop switch, use the key, if available, to turn the switch to the "OFF" position. Where the in-car stop switch is located behind a locked panel, unlock the panel and place the stop switch in the "OFF" position.

(5) If available, an evacuation bridge equipped with guard ropes or rails with a height of 42 in. (1 070 mm) should be placed securely between the side emergency exits of the stalled elevator car and rescue elevator car. If an evacuation bridge is not available, other suitable means must be provided. The distance spanned should not exceed 30 in. (762 mm) [see Fig. 1.3.5(b)].

(6) Personal fall arrest systems and secured lifelines must be used to protect the passengers, whether or not an evacuation bridge is used.

(7) The rescue team members should assist the passengers, one at a time, in the transfer to the rescue elevator car. Passengers should be wearing a personal fall arrest system and be tied off to a lifeline until they are well inside the rescue car.

1.3.6 Restoration of Elevator Service

Do not attempt to restore power to the stalled elevator. After the rescue has been completed, have a rescue team member stand by to inform the elevator personnel which switches were pulled and which doors were forced open. The mainline disconnect switch should remain locked and tagged out until such time that elevator personnel arrive to return the elevator to normal service. If the emergency personnel must leave with their lockout/tagout device(s), the building must supply and install an appropriate lockout/tagout device.

SECTION 1.4
RESCUE FOLLOWING AN EARTHQUAKE OR OTHER CATASTROPHE

There should be no attempt to move the elevator by the emergency personnel unless it is done under the direct supervision of experienced elevator personnel. A rescue team selected and trained to perform evacuations should use the rescue procedures found in Section 1.3 to evacuate passengers.

Copyright © 2015 by the American Society of Mechanical Engineers.
No reproduction may be made of this material without written consent of ASME.

Fig. 1.3.5(b) Evacuation Bridge in Between Side Emergency Exits

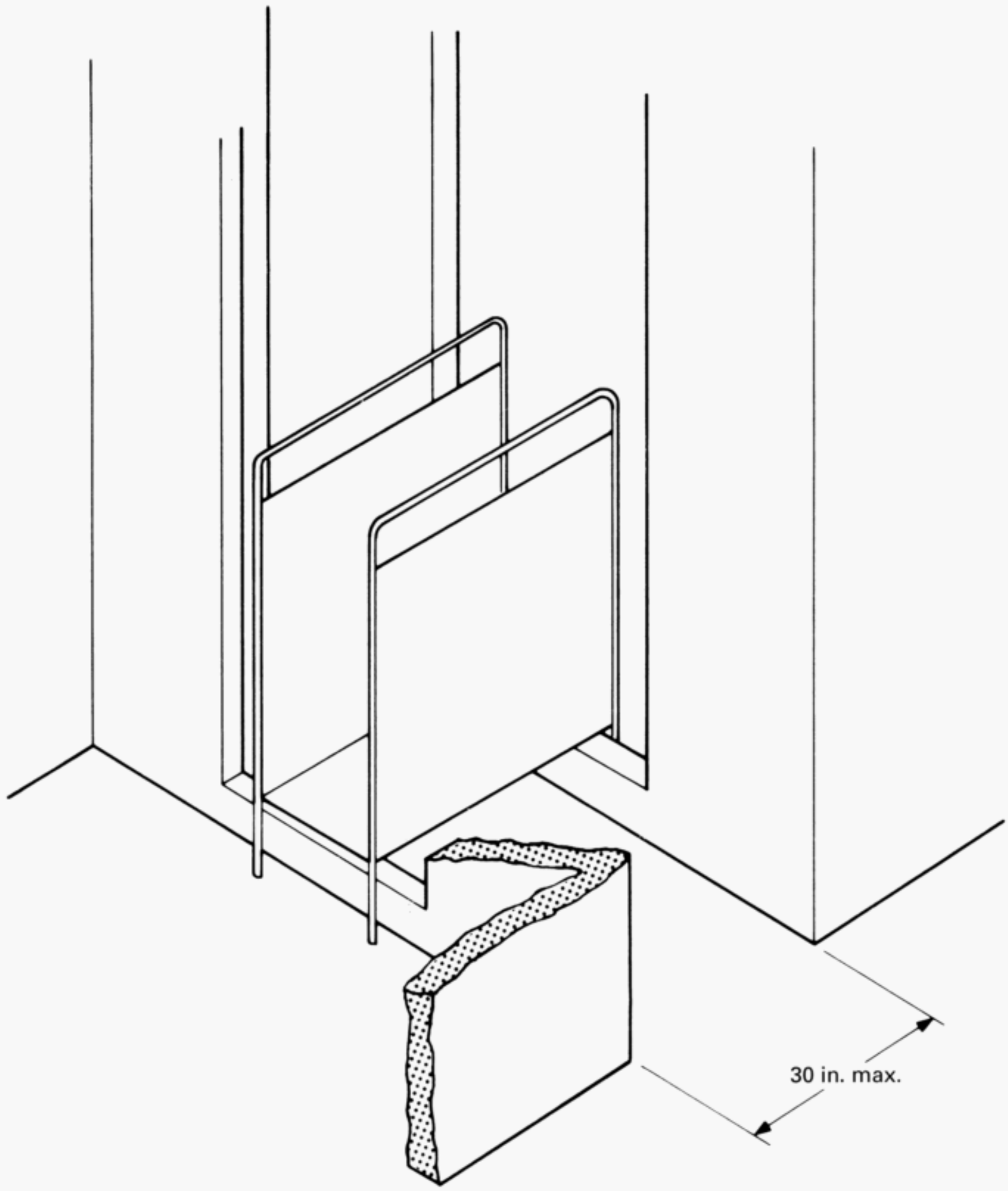

Copyright © 2015 by the American Society of Mechanical Engineers.
No reproduction may be made of this material without written consent of ASME.

SECTION 1.5
ELEVATOR SYSTEM LOCKDOWN

Firefighters' Operation, Phase I may be used to secure the elevator system at the designated landing should it become necessary to do so. See 2.3.1.1 for activation of Phase I using the three-position key switch located at the designated landing to gain control of the elevator system.

Possible circumstances that may warrant "lockdown procedures" are

(a) damage to adjacent buildings or other structures

(b) ensuing natural disasters, such as earthquakes, hurricanes, and floods

(c) police emergencies, such as

(1) bomb scares

(2) biohazards/chemical hazards

(3) terrorist threats

Appropriate security measures should be taken to secure each elevator and its contents, if any, as it returns to the designated landing and opens the doors.

Copyright © 2015 by the American Society of Mechanical Engineers.
No reproduction may be made of this material without written consent of ASME.

PART II
FIREFIGHTERS' SERVICE OPERATING PROCEDURES

SECTION 2.1
A BRIEF HISTORY OF THE EVOLUTION OF FIREFIGHTERS' SERVICE OR FIREFIGHTERS' EMERGENCY OPERATION

In the 1973 supplement to the A17.1-1971 Elevator Code, a new rule was introduced as Rule 211.3. This Rule addressed the operation of an elevator under fire or other emergency conditions. The original rule required that all elevators servicing three or more landings or having a travel of 25 ft (7.6 m) or more have a three-position switch located in the main lobby adjacent to the elevators, as well as smoke detectors in the elevator lobbies to recall the elevators in the event of a fire. The three-position switch had an "ON" position, an "OFF" position, and a "BYPASS" position. The different switch positions operated as follows:

(a) The "OFF" position would allow normal operation of the elevator(s).

(b) The "ON" position would cause all elevators to return to the recall floor and to open their doors and shut down.

(c) The "BYPASS" position would override the elevator lobby smoke detectors and allow normal operation of the elevator(s).

The key would be removable only in the "ON" or "OFF" position.

The 1973 supplement also required a three-position switch to be installed in all elevator cars having a travel of 70 ft (21 m) or more for use by firefighters or other emergency personnel. This switch was marked "ON," "OFF," and "BYPASS." The "ON" position would allow a firefighter to manually control the elevator to travel to other floors. The "OFF" position kept the car at the landing on Phase I Fire Service. The "BYPASS" position was a continuous pressure switch that allowed the car gate contact and hoistway door interlocks to be bypassed and the car to travel downward to the main or recall floor. This "BYPASS" position was deleted by a change in the next supplement to the Code. (If this feature is still on an elevator, it should be recommended to the owner that it be deactivated, as it is dangerous to use.) The other significant change in this supplement to the Code was the removing of the car from Phase II by returning it to the main floor. The basic operation remained pretty much unchanged until the 1981 edition of the Code introduced the idea of returning the cars to an alternate level if the smoke sensor (previously not required) in the main lobby operated. The 1981 edition also eliminated the limit of three landings before the need to install Phase I and Phase II on all elevators equipped with firefighters' service.

Copyright © 2015 by the American Society of Mechanical Engineers.
No reproduction may be made of this material without written consent of ASME.

In Canada, in the 1975 edition of the B44 Elevator Code, a new clause was introduced as 3.12.15. This clause addressed the operation of an elevator under fire or other emergency conditions. Where elevators were required by the building code to be arranged for firefighters' operation, the new requirements would apply. This included a two-position switch located in the main lobby adjacent to the elevators, as well as a two-position key switch in the elevator car. The two-position switch at the lobby had an "ON" position and an "OFF" position. The "OFF" position allowed normal operation of the elevator(s); the "ON" position would cause all elevators to return to the recall floor and park with open doors. There was also provision for connection of the fire alarm system to the elevators. When this feature was provided, the switch at the main floor lobby had an additional position marked "AUTO." When in the "AUTO" position, a signal from the fire alarm would also initiate recall operation. The two-position switch installed in all elevator cars was marked "ON" and "OFF." The "ON" position would allow a firefighter to manually control the elevator to travel to other floors. The use of a red hat icon in the lobby on the outside of the elevators was introduced, which identified elevators that were in full compliance with additional building code requirements.

ASME A17.1 and Canadian Standards Association (CSA) B44 codes describe two special landings with respect to firefighters' service: the designated level or landing and the alternate level or landing. The designated landing is the preferred landing where the elevator cars will be sent for most efficient evacuation of passengers and best access for arriving firefighters. This is typically the lobby or ground floor of the building. Recognizing that this landing may contain the source of the fire, a second (alternate) landing is defined as well. If the building smoke detectors at the designated landing are the initial trigger for Phase I, the elevators will be sent to the alternate landing, typically a level or landing other than the lobby, with access to a street level exit. Once the cars have returned to a given recall level (designated or alternate), subsequent smoke alarms are not permitted to move the car. During a fire, smoke may move through the building and trigger additional fire alarm-initiating devices (FAIDs). The secondary FAIDs would not be good indicators of the source of the fire, only the location of smoke. Only direct action by the firefighter(s) onsite (turn both "FIRE RECALL" switches to the "ON" position) after confirming the designated lobby is safe will allow the elevators to be moved to the designated landing.

In the 1985 edition of the B44 Code, the "HOLD" position was added to the key switch in the elevator car. This was provided to give the firefighter more control over the elevator car by locking it at the floor with the doors open, allowing the firefighter to leave the car unattended.

The next major change in the operation of Phase II came in 1986, when the requirement for a three-position switch in the car replaced the previous requirement for a two-position switch (ASME A17.1). The in-car switch required the addition of a "HOLD" position. This was provided to give the firefighter more control over the elevator car by locking it at the floor to which it was taken. It would remain there with the doors open and the "DOOR CLOSE" button inoperative. Turning the switch to the "OFF" position would return the car to Phase I and return it to the recall floor.

Copyright © 2015 by the American Society of Mechanical Engineers.
No reproduction may be made of this material without written consent of ASME.

In 2000, a change was made to replace the "BYPASS" function in the Phase I key switch with the "RESET" function. The ASME A17 Standards Committee decided that the work of smoke detectors belonged to the National Fire Protection Association (NFPA) and NFPA 72, and that with the advent of modern fire actuation systems, it was best to eliminate the "BYPASS" feature. A fire alarm system that conforms to NFPA 72 can place one or more smoke detectors in trouble (bypassed), whereas the former ASME A17.1 "BYPASS" feature bypassed all smoke detectors used for recall. This was decided during the harmonization meetings between the ASME A17 Standards Committee and the CSA B44 Technical Committee. With the harmonization of the CSA B44 and ASME A17.1 elevator codes, we now have the same operation requirements in Canada and the United States. The "RESET" function is used to exit Phase I, provided that there are no FAIDs in the triggered condition. The "RESET" function will also extinguish the audible and visual indicators in the elevator and return the car to use by the general public.

The 2004 and later editions grouped the firefighters' operation key switch with the "DOOR OPEN," "DOOR CLOSE," "CALL CANCEL," and in-car "STOP" switches on a panel behind a locked cover. The firefighters' operation panel is opened with the same key that operates the "FIRE OPERATION" switch.

In the 2007 edition, requirements were added to describe how an electric traction elevator should operate when equipped with a battery rescue device. In addition, requirements were added for Firefighters' Emergency Operation for double-deck elevators providing a means in the upper compartment (likely a video screen) to display the contents of the lower compartment so the firefighters can verify there are no passengers in the lower compartment. Once the lower compartment is empty, the "LOWER CAR LOCKOUT" key switch in the upper compartment is turned to the "ON" position to close the lower compartment doors and allow the firefighter to run the car from the Phase II controls in the upper compartment. Another change was the introduction of the FEO-K1 key (tubular barrel key), which is to be used for all applications, except where a local code authority has specified a different key.

NOTE: Certain cities have Firefighters' Emergency Operation that is distinctly different from the ASME A17.1/CSA B44 Code requirements. Those cities must write their own explanation of how their version of Firefighters' Emergency Operation operates.

SECTION 2.2
COMMUNICATION SYSTEMS

2.2.1 High-Rise Buildings

Buildings having floors used for human occupancy located more than 60 ft (18 m) above the lowest level of fire department vehicle access will be provided with an automatic fire alarm system and an emergency voice/alarm communication system in accordance with the Building Code. The fire command center is where the fire department and emergency voice/alarm communication systems are located.

Copyright © 2015 by the American Society of Mechanical Engineers.
No reproduction may be made of this material without written consent of ASME.

The telephone for fire department use and the public address system, if required, are also located at the fire command center.

2.2.2 Fire Department Communication System

Depending on the edition of the Building Code in effect at the time of the elevator installation, the requirements for communication may mandate a hardwired system with the alternative use of a fire department radio system if the radio system is approved by the fire department, or they may allow a hardwired system where approved by the fire department in lieu of a radio coverage system in accordance with the International Fire Code.

The wired fire department communication system must be designed and installed in accordance with NFPA 72. It operates between the fire command center and elevators, elevator lobbies, and other areas of the building. Hardwired phone jacks may be found in the elevators and elevator lobbies. The fire department communication device should be found at each floor level within the enclosed exit stairway.

2.2.3 Emergency Voice/Alarm Communication System

The operation of any automatic fire detector, sprinkler water-flow device, or manual fire alarm box will automatically sound an alert tone followed by voice instructions. On high-rise buildings, the system will operate on a minimum of the alarming floor, the floor above, and the floor below. Elevator groups are listed as one of the necessary paging zones where speakers for the system must be provided. This system must be designed and installed in accordance with NFPA 72.

The emergency voice/alarm communication system will also have the capability to broadcast live voice messages through paging zones on a selective and all-call basis.

SECTION 2.3
FIREFIGHTERS' EMERGENCY OPERATION AND HOW IT WORKS TODAY

The ASME A17.1-2010/CSA B44-10 Code requires Firefighters' Emergency Operation (Phase I and Phase II) on all elevators except where the hoistway or a portion thereof is not required to be of fire-resistive construction, the travel does not exceed 80 in. (2 000 mm), and the hoistway does not penetrate a floor. The CSA B44 Code requires this feature when the National Building Code of Canada requires it. This feature is divided into two separate operations commonly referred to as Phase I and Phase II.

2.3.1 Phase I and Phase II Operation

Paragraphs 2.3.1.1 and 2.3.1.2 describe Phase I and Phase II operation, respectively.

Copyright © 2015 by the American Society of Mechanical Engineers.
No reproduction may be made of this material without written consent of ASME.

Fig. 2.3.1.1 Fire Recall Key Switches and Markings

Three-Position Switch (in Elevator Lobby)

Two-Position Switch (in Remote Location)

2.3.1.1 Phase I Emergency Recall Operation. Phase I can be activated by a Phase I key switch(es) or by a fire alarm-initiating device (FAID). The FAID is typically a smoke detector located in elevator lobbies, machine room(s), or hoistway(s). The three-position "FIRE RECALL" key switch located at the designated landing is marked "RESET," "OFF," and "ON." The two-position "FIRE RECALL" key switch may be located in a fire control center or security station and is marked "ON" and "OFF." Each group of elevators will be equipped with its own "FIRE RECALL" key switch(es) (see Fig. 2.3.1.1). Thus, the "FIRE RECALL" switch for a group of elevators may not affect all elevators in the building.

When the two- or three-position "FIRE RECALL" key switch is turned to the "ON" position, it will place that group of elevators on Phase I. If a car is standing at a landing with the doors open, the doors will close, and the car will return nonstop to the designated level. If a car is in motion, it will stop to reverse direction (if necessary) and return to the designated landing.

If a FAID is triggered before one of the "FIRE RECALL" key switches is turned on, all cars affected by that FAID will return to the designated landing. Where the FAID indicates the designated landing is the likely source of the fire, the car will instead be directed to the alternate landing. Note that some buildings will have elevators in a single group with equipment in different machine rooms/spaces or hoistways. Therefore, a given FAID may cause different cars in a single group to return to different landings.

For three-position switches marked "BYPASS," "OFF," and "ON," if Phase I has been initiated by a malfunctioning FAID and the system has been checked and cleared, the switch can be turned to the "BYPASS" position, which will return the elevator(s) to normal service. The key is not to be removable in the "BYPASS" position in order to encourage repair of the malfunctioning smoke detector.

For three-position switches marked "RESET," "OFF," and "ON," the "RESET" position is used to remove the elevator from Phase I operation as long as the additional two-position switch, where provided, is in the "OFF" position and no FAID is activated. The "RESET" position does not override a FAID.

Where buildings are supplied with an additional two-position switch ("OFF" and "ON") in a remote location such as the fire control or guard station, turning both the three-position and two-position switches to the "ON" position will override an active FAID at the designated landing and will recall the elevator(s) to the designated level.

Copyright © 2015 by the American Society of Mechanical Engineers.
No reproduction may be made of this material without written consent of ASME.

An automatic elevator will respond in the following manner if Phase I is initiated:

(a) All cars traveling away from the recall level will stop at or before the next available landing and reverse direction without opening their doors.

(b) All cars standing at a floor will immediately close their doors and return to the recall level.

(c) Upon activation of Phase I and closing of doors, the emergency stop switch and/or in-car stop switch becomes inoperative as soon as the car moves away from the landing.

(d) Smoke- or flame-sensitive, door-reopening devices also become inoperative. Door-reopening devices not sensitive to smoke or flame (e.g., mechanically actuated devices) are permitted to remain operative.

(e) An audible and visual signal in the car activates and remains so until the car returns to the recall level. Activation of a FAID in the machine room or hoistway, or other conditions that will render the elevator inoperable for a firefighter, is indicated by the intermittent flashing of the visual signal. The audible and visual signals alert persons having control of the elevator that the elevator is to be returned to the designated level or alternate level [see (g), (h), and (j)].

(f) When Phase I is initiated, the in-car "DOOR OPEN" button becomes inoperative when the car moves away from the landing.

(g) Cars that have manually operated doors will have an audible and visual signal. Once the doors are manually closed, the car will return nonstop to the recall level.

(h) If the elevator is on Attendant Operation, it will not return to the recall level until a set time period (from 10 sec to 30 sec) has passed or it is returned to Normal Operation by the attendant.

(i) If the elevator is on Hospital Service, it will remain under the control of the operator and not return to the recall floor until removed from Hospital Service.

(j) If the elevator is on Inspection Operation or Hoistway Access switches have been enabled, the elevator will not return to the designated level or the alternate level until the person having control of the elevator removes the car from Inspection Operation or Hoistway Access operation.

(k) If the elevator has vertically sliding doors with constant pressure or momentary pressure operation, the "DOOR CLOSE" buttons will remain operative in order to close the doors. When the doors are fully closed, the cars will then return nonstop to the recall level.

2.3.1.2 Phase II Emergency In-Car Operation. Phase II Operation is key activated by placing the Fire Service key into the Fire Service Phase II switch in or adjacent to the car opening panel or in the firefighters' operation panel. This switch as previously described has three positions. The "ON" position is to place the elevator under the direct control of the firefighter in the car. This switch when turned on gives the firefighter control of the car but does not move it. The "OFF" position is the normal operating position, while the "HOLD" position allows the user to control the use of the elevator to hold the elevator at the floor. A firefighter equipped with a portable radio should be assigned the task of car operator and should stay with the car. If available, a firefighter's phone jack in the panel may be used to establish communication.

Copyright © 2015 by the American Society of Mechanical Engineers.
No reproduction may be made of this material without written consent of ASME.

Fig. 2.3.2.1 Phase I Emergency Recall Operation Instructions

FIREFIGHTERS' OPERATION

To recall elevators
Insert fire key and turn to "ON"

2.3.2 Phase I and Phase II Instructions

Paragraphs 2.3.2.1 and 2.3.2.2 provide instructions on the use of Phase I and Phase II operation.

2.3.2.1 Phase I Instructions. Instructions for operation are located adjacent to the "FIRE RECALL" switch at the designated level (see Fig. 2.3.2.1).

(a) For Automatic Elevators

(1) On arrival at the building lobby, obtain the Fire Service key(s). The Fire Service key operates the three-position "FIRE RECALL" key switch at the designated level and the two-position "FIRE RECALL" switch in the fire control station.

(2) Determine if elevators are on Phase I. Phase I may have been initiated by a FAID or by the two-position "FIRE RECALL" key switch in the fire control station. The visual signal will be illuminated, indicating that Phase I is on.

(3) Ensure the car is on Phase I by turning the "FIRE RECALL" switch(es) in the lobby or fire command center to the "ON" position. The elevator(s) return to the designated level as described in 2.3.1.1.

(b) For Nonautomatic Elevators. Operation of the "FIRE RECALL" switch or a FAID will activate an audible and visual signal in the car to alert the attendant or the person having control of the elevator to return the elevator to the designated level or alternative level [see 2.3.1.1(h)].

2.3.2.2 Phase II Operating Instructions. The instructions for operation of the elevator while on Phase II Emergency In-Car Operation or Fire Emergency Operation (FEO) are located near the "FIRE OPERATION" key switch in the car. Where the switch is located behind a locked panel, the instructions are located inside the panel. Otherwise, the instructions are located on the car operating panel.

Where the "FIRE OPERATION" controls are located behind a locked panel, the panel may be automatically unlocked when Phase I is initiated or manually unlocked using the Fire Service key. The same key is used to operate the key switch in the corridor at the designated level and the key switch inside the panel. The three-position "FIRE OPERATION" key switch in the panel is marked "OFF," "HOLD," and "ON," and the key is removable in the "OFF" and "HOLD" positions. The control buttons and switches in the panel are located as shown in Fig. 2.3.2.2.

Copyright © 2015 by the American Society of Mechanical Engineers.
No reproduction may be made of this material without written consent of ASME.

Fig. 2.3.2.2 Fire Operation Key Switch in Firefighters' Operation Cabinet

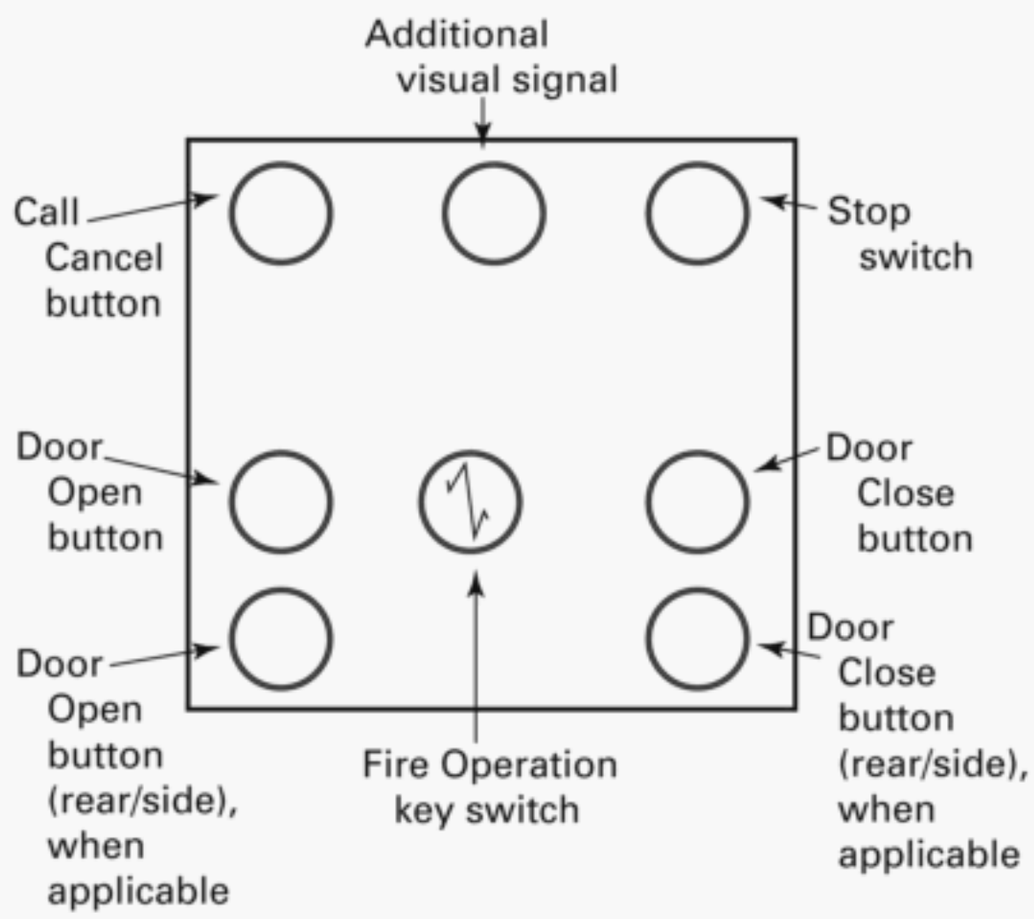

GENERAL NOTES:
(a) Switches and buttons show only the location, not the labeling.
(b) Not to scale.

The instructions read as follows:

To operate car	**Insert fire key and turn to "ON"** **Enter floor selection**
Instructions: After the panel is unlocked, the Fire Service key may be removed and inserted into the "FIRE OPERATION" key switch in the panel and turned to the "ON" position. The elevator is now on Phase II Emergency In-Car Operation. Press the button for the floor desired. Make several intermediate stops before stopping two floors below the fire floor and check the hoistway for the presence of smoke and water. Check around the car door openings for heat prior to the operation of the "DOOR OPEN" button.	
To cancel floor selection	**Press "CALL CANCEL" button**
Instructions: In the event that an incorrect floor button has been selected or instructions from the incident commander are received to go to a floor other than the one previously selected, the floor selection may be cancelled and a different floor selection entered.	

Copyright © 2015 by the American Society of Mechanical Engineers.
No reproduction may be made of this material without written consent of ASME.

To close door	Press and hold "CLOSE" button

Instructions: Elevators with automatic doors will not close automatically after the floor selection is made. The "DOOR CLOSE" button must be pressed and held until the doors are fully closed.

With manual doors, close the doors by hand and ensure that the doors do not drift open.

To open door	Press and hold "OPEN" button

Instructions: When the elevator arrives at the desired floor, first check around the doors for smoke or water. After confirming no presence of smoke or water, partly open the doors by momentarily pressing the "DOOR OPEN" button. If conditions outside the car prove safe, the doors may be fully opened by pressing and holding the "DOOR OPEN" button until the doors are fully opened.

To hold car at floor	With doors open, turn key to "HOLD"

Instructions: To hold the car at the floor, turn the key to the "HOLD" position when the doors are fully open and remove the key. This is intended to keep the car at the floor and not allow someone to take it from you.

For emergency stop	Use "STOP" switch

Instructions: The firefighters' operation panel will be equipped with a toggle or push–pull stop switch. Elevators installed under older editions of the Code may include an additional key-operated stop switch. The Fire Service key does not operate this additional in-car stop switch.

To automatically return to recall floor	Turn key to "OFF"

Instructions: To return the car to the recall floor, with power doors, turn the key to the "OFF" position. The doors will close. With manual doors, close the doors by hand and turn the key switch to the "OFF" position. If a firefighter is assigned as the operator, the firefighter can follow the incident commander's instructions and, if directed, return the car to the designated level.

NOTE: If the elevator does not operate as expected, move to a different elevator in the bank and follow the instructions.

To remove the car from Phase II operation, the car must be returned to the recall floor with the Phase II key in the "OFF" position.

To remove the car from Phase I operation

(a) all FAIDs (smoke detectors) must be cleared or individually bypassed at the fire control panel

(b) the second Phase I key switch (when provided) must be in the "OFF" position

Copyright © 2015 by the American Society of Mechanical Engineers.
No reproduction may be made of this material without written consent of ASME.

(c) the Phase I key switch must be turned momentarily to the "RESET" position, then the "OFF" position (for older vintage elevators with an "ON"—"OFF"—"BYPASS" switch, simply turn the switch to "OFF")

NOTES:
(1) If there is an interruption of power while the elevator is on either Phase I or Phase II operation, the elevator(s) will remain on Phase I or Phase II operation when power (from utility or emergency power generator) is restored.
(2) It is the responsibility of the firefighter to verify the version of firefighters' service that is in the buildings within their jurisdiction.

Copyright © 2015 by the American Society of Mechanical Engineers.
No reproduction may be made of this material without written consent of ASME.

PART III
EMERGENCY/STANDBY POWER OPERATION

SECTION 3.1
HISTORY

The first mention of emergency power in the A17.1 Code came in 1978 in Rule 211.2, which basically stated an elevator may be powered by an emergency power system, provided it is in conformance with Rules 207.8 (Passenger Overload) and 210.10 (Absorption of Regenerated Power).

The first technical change to Rule 211.2 came in 1989 (A17.1b). The rule title changed from "Emergency Power" to "Standby (Emergency) Power" and the requirement for a manual selection switch was added.

In 1992, the A17.1 Code dropped the word "Emergency" from the rule title altogether.

In 2000, the first year of the harmonized Code, several additions were introduced. The title now reads, "Emergency or Standby Power System" (2.27.2). Other additions were as follows:

(a) Where an emergency or standby power system was provided, it had to be capable of operating at least one elevator with rated load at a time.

(b) The transfer between normal and emergency or standby power was required to be automatic.

(c) An illuminated signal was now required in the elevator lobby at the designated level.

(d) More stringent requirements were added for the manual selector switch.

SECTION 3.2
OPERATION

When provided, emergency or standby power is activated when the normal power source is lost. When the alternate power source is activated, one or more elevators will resume service automatically in one of the following manners:

(a) An illuminated signal at the designated landing marked "Elevator Emergency Power" will activate, and all elevators will resume normal service.

(b) An illuminated signal at the designated landing marked "Elevator Emergency Power" will activate, one elevator at a time will resume operation and immediately return to the designated landing, the doors will open, and the elevator will shut

Copyright © 2015 by the American Society of Mechanical Engineers.
No reproduction may be made of this material without written consent of ASME.

down. The next elevator will resume operation and follow the same steps. This procedure will continue until the last car has returned to the designated landing. Once all cars have returned to the designated landing, one car will remain on normal service. A selector switch at the designated landing containing positions marked with elevator identifications and "AUTO" will give the authorized personnel the means to manually select a specific elevator to operate. The switch will be keyed or located behind a locked panel. The switch or panel will be keyed the same as the Fire Service key switch.

Copyright © 2015 by the American Society of Mechanical Engineers.
No reproduction may be made of this material without written consent of ASME.

NONMANDATORY APPENDIX A SUMMARY OF FIREFIGHTERS' EMERGENCY OPERATION (ASME A17.1-2010/CSA B44-10)

Table A-1 illustrates the quick, high-level summary of the 2010 edition of Firefighters' Emergency Operation.

Table A-1 Summary of Firefighters' Emergency Operation (ASME A17.1-2010/CSA B44-10)

Item	Summary
1	All elevators will have Phase I and Phase II (with limited exceptions).
2	The FEO-K1 key (or local code key) is designed to operate all fire controls on the elevator system.
3	Firefighters understand the risks associated with using an elevator in a building that is on fire and are trained to recognize the danger(s) and react accordingly. Few elevators are hardened against smoke, water, or fire, so plan accordingly.
	Phase I Operation
4	Phase I operation is triggered by one of two key switches (in elevator lobby and in an optional second location), by a smoke alarm, or by a FAID.
5	Once triggered, normal passenger controls and signal devices are disabled, and all cars are returned to the designated (egress) landing to park with doors open.
6	The FAID may send the car to the alternate landing if conditions indicate the source of the fire may be at or near the designated landing. The firefighters can override this with the Phase I key switch(es) when they determine it is safe to send the car(s) to the designated landing.
7	When the building has been cleared, the car is removed from Phase I by resetting any tripped FAIDs (at fire alarm panel), removing the car from Phase II, and turning the Phase I switch to "RESET" momentarily, then to "OFF."

Copyright © 2015 by the American Society of Mechanical Engineers.
No reproduction may be made of this material without written consent of ASME.

Table A-1 Summary of Firefighters' Emergency Operation (Cont'd) (ASME A17.1-2010/CSA B44-10)

Item	Summary
	Phase II Operation
8	Phase II provides a means for firefighters to run the elevator to any floor the elevator is capable of reaching. The means to select a floor may be a one-per-floor button or telephone style keypad.
9	The "CALL CANCEL" button stops a moving elevator at the next available floor. The "STOP" switch stops a moving elevator immediately (may stop between floors). If all goes according to plan, the firefighter will not need these controls, but they are provided in case the unexpected happens.
10	Power doors open and close by constant pressure on the "OPEN" or "CLOSE" button. Doors will reverse direction if the "OPEN"/"CLOSE" button is released before the door reaches the full open/closed position. Manual doors are opened and closed manually by the firefighter.
11	The Phase II "HOLD" position is provided to allow the firefighter to lock the car at a landing and be reasonably assured the car will still be waiting when the firefighter returns. (Evacuating passengers cannot take the car away from the firefighter.)
12	The doors should be in the fully open position before attempting to change the position of the Phase II key switch. The "OFF" position is an exception. Turning the Phase II key switch to the "OFF" position will always cause the doors to close and the car to return to the original (designated or alternate) landing.
13	If the elevator control system determines that there is an impending failure that will render the elevator inoperative on Phase II, the visual signal (fire hat) will start to flash. Firefighters are thus cautioned to exit the elevator at the first safe opportunity.
14	As conditions permit, the firefighters may choose to keep one or more cars on Phase II mode and return the remaining cars of a group to normal mode (see item 7).

Copyright © 2015 by the American Society of Mechanical Engineers.
No reproduction may be made of this material without written consent of ASME.

ASME A17.4-2015

ISBN 978-0-7918-6967-3

Copyright © 2015 by the American Society of Mechanical Engineers.
No reproduction may be made of this material without written consent of ASME.