INTERNATIONAL STANDARD

ISO/ASME 14414

First edition
2015-04-01

Pump system energy assessment

Évaluation énergétique des systèmes de pompage

Reference number
ISO/ASME 14414:2015(E)

© ISO/ASME 2015

ASME International
Provided by IHS under license with ASME
No reproduction or networking permitted without license from IHS

Licensee=Chongqing Institute of quality and Standardization 5990390
Not for Resale, 2015/7/22 06:49:48

COPYRIGHT PROTECTED DOCUMENT

© ISO/ASME 2015

All rights reserved. Unless otherwise specified, no part of this publication may be reproduced or utilized otherwise in any form or by any means, electronic or mechanical, including photocopying, or posting on the internet or an intranet, without prior written permission. Permission can be requested from either ISO at the address below or ISO's member body in the country of the requester.

ISO copyright office
Case postale 56 • CH-1211 Geneva 20
Tel. + 41 22 749 01 11
Fax + 41 22 749 09 47
E-mail copyright@iso.org
Web www.iso.org

ASME
Two Park Avenue • New York, NY 10016-5990 • USA
Tel. 800-843-2763
Fax 973-882-1717
E-mail CustomerCare@asme.org
Web www.asme.org

Published in Switzerland

--`,`,`,`,`,`,,`,`,`,`,`,`,`,`,`,`,`,`,-`-`,`,`,`,`,`,`,,,`---

ASME International
Provided by IHS under license with ASME
No reproduction or networking permitted without license from IHS

Licensee=Chongqing Institute of quality and Standardization 5990390
Not for Resale, 2015/7/22 06:49:48

Contents

Page

Foreword ..... **v**
Introduction ..... **vi**
1 Scope **7**
2 Normative references **7**
3 Terms and definitions **8**
4 Identification of the assessment team, authority and functions **8**
4.1 Identification of assessment team functions 8
4.2 Assessment team structure, leadership and competency 9
4.3 Facility management support 9
4.4 Communications 9
4.5 Access to facilities, personnel and information 9
4.6 Assessment objectives, scope and boundaries 10
4.7 Action plan 10
4.7.1 General 10
4.7.2 Assessment scheduling 11
4.8 Initial Data Collection and Evaluation 11
4.8.1 General 11
4.8.2 Initial facility specialist interviews 11
4.8.3 Energy project history 11
4.8.4 Energy cost 11
4.8.5 Initial system data 12
4.9 Objective check 12
5 Conducting the Assessment **12**
5.1 Assessment Levels 12
5.1.1 General 12
5.1.2 Level 1 assessments 13
5.1.3 Level 2 assessments 14
5.1.4 Level 3 Assessments 14
5.2 Walk Through 15
5.3 Understanding system functional requirements 16
5.4 Determining system boundaries and system energy demand 16
5.5 Information needed to assess the efficiency of a pumping system 16
5.5.1 General 16
5.5.2 Electrical motor/drive information 16
5.5.3 Pump information 17
5.5.4 Liquid properties information 18
5.5.5 Detailed system data 18
5.5.6 Measured data 19
5.6 Data collection 19
5.6.1 System information 19
5.6.2 Measurement of pump and motor operating data 20
5.6.3 Pressure 20
5.6.4 Flow 20
5.6.5 Input power 20
5.7 Cross validation 21
5.8 Wrap-up meeting and presentation of initial findings and recommendations 21
6 Reporting and documentation **21**
6.1 Final assessment report 21
6.2 Data for third party review 21
6.3 Review of final report by assessment team members 22
Annex A (normative) **Report Contents** **23**

--`,,`,,`,`,,`,,`,

Annex B (informative) **Recommendations on efficient system operation and energy reduction - Examples** **27**
Annex C (informative) **Expertise, experience and competencies** **45**
Annex D (informative) **Recommended guidelines for analysis software** **48**
Annex E (informative) **Example of prescreening worksheet** **50**
Annex F (informative) **Specific Energy** **51**
Annex G (informative) **Pumping system parasitic power** **55**
Annex H (informative) **Example of pumping system efficiency indicator** **58**
Bibliography **61**

© ISO/ASME 2015 – All rights reserved
ASME International
Provided by IHS under license with ASME
No reproduction or networking permitted without license from IHS
Licensee=Chongqing Institute of quality and Standardization 5990390
Not for Resale, 2015/7/22 06:49:48

Foreword

ISO (the International Organization for Standardization) is a worldwide federation of national standards bodies (ISO member bodies). The work of preparing International Standards is normally carried out through ISO technical committees. Each member body interested in a subject for which a technical committee has been established has the right to be represented on that committee. International organizations, governmental and non-governmental, in liaison with ISO, also take part in the work. ISO collaborates closely with the International Electrotechnical Commission (IEC) on all matters of electrotechnical standardization.

The procedures used to develop this document and those intended for its further maintenance are described in the ISO/IEC Directives, Part 1. In particular the different approval criteria needed for the different types of ISO documents should be noted. This document was drafted in accordance with the editorial rules of the ISO/IEC Directives, Part 2. www.iso.org/directives

Attention is drawn to the possibility that some of the elements of this document may be the subject of patent rights. ISO shall not be held responsible for identifying any or all such patent rights. Details of any patent rights identified during the development of the document will be in the Introduction and/or on the ISO list of patent declarations received. www.iso.org/patents

Any trade name used in this document is information given for the convenience of users and does not constitute an endorsement.

For an explanation on the meaning of ISO specific terms and expressions related to conformity assessment, as well as information about ISO's adherence to the WTO principles in the Technical Barriers to Trade (TBT), see the following URL: Foreword - Supplementary information

ISO/ASME 14414 was prepared by ISO/TC 115, *Pumps,* in collaboration with ASME EA Standards Committee — *Industrial System Energy Assessment*.

ASME is the registered trademark of The American Society of Mechanical Engineers.

This standard was developed under procedures accredited as meeting the criteria for American National Standards. The Standards Committee that approved the standard was balanced to assure that individuals from competent and concerned interests have had an opportunity to participate. The proposed code or standard was made available for public review and comment that provides an opportunity for additional public input from industry, academia, regulatory agencies, and the public-at-large.

ASME does not "approve", "rate", or "endorse" any item, construction, proprietary device, or activity. ASME does not take any position with respect to the validity of any patent rights asserted in connection with any items mentioned in this document, and does not undertake to insure anyone utilizing a standard against liability for infringement of any applicable letters patent, nor assumes any such liability. Users of a standard are expressly advised that determination of the validity of any such patent rights, and the risk of infringement of such rights, is entirely their own responsibility.

Participation by federal agency representative(s) or person(s) affiliated with industry is not to be interpreted as government or industry endorsement of this standard.

ASME accepts responsibility for only those interpretations of designated documents issued in accordance with the established ASME procedures and policies, which precludes the issuance of interpretations by individuals. ASME will not issue written interpretations of this edition of this standard.

ISO/ASME 14414 was approved as an American National Standard by the American National Standards Institute on 2015-02-06.

© ISO/ASME 2015 – All rights reserved

ASME International
Provided by IHS under license with ASME
No reproduction or networking permitted without license from IHS
Licensee=Chongqing Institute of quality and Standardization 5990390
Not for Resale, 2015/7/22 06:49:48

Introduction

Pumping systems account for a significant portion of a facility's energy consumption in many industries. In the majority of pumping systems the energy added to the working liquid by the pump is much greater than is required by the process. The excess energy added to the system (e.g. due to throttled control valve) increases heat, noise and vibration but also can bring the system's maintenance costs. The addition of excessive energy to the system often results in over-sizing piping system components such as pumps, process components, and control valves, resulting in an increase in capital costs.

This International Standard provides a method to assess pump systems, to identify and quantify pump system energy consumption reduction opportunities and reliability improvement opportunities. It gives a common definition for what constitutes an assessment for both users and providers of assessment services. Its objective is to provide clarity for these types of services which have been variously described as energy assessments, energy audits, energy surveys and energy studies.

In all cases, systems (energy-using logical groups of equipment organized to perform a specific function) are analysed through various techniques such as measurement, resulting in identification, documentation and prioritization of energy performance improvement opportunities.

When contracting for assessment services, facility personnel may use this International Standard to define and communicate their desired scope of assessment activity to third party contractors or consultants.

This International Standard is expected to contribute to decreased energy consumption and consequently to decreased carbon footprint.

This International Standard includes the required assessment report content in Annex A. It gives examples of efficient system operation and energy reduction opportunities in Annex B, information on competencies and experiences welcomed to perform audit in Annex C, guidelines for analysis software in Annex D, a typical example of pre-screening worksheet in Annex E, information on specific energy in Annex F, information on the concept of parasitic power in Annex G and examples of pumping system efficiency indicator in Annex H.

This International Standard is developed within the framework of ISO 50001, ISO 50002 and ISO 50003.

© ISO/ASME 2015 – All rights reserved
ASME International
Provided by IHS under license with ASME
No reproduction or networking permitted without license from IHS
Licensee=Chongqing Institute of quality and Standardization 5990390
Not for Resale, 2015/7/22 06:49:48

Pump system energy assessment

1 Scope

This International Standard sets the requirements for conducting and reporting the results of a pumping system energy assessment (hereafter referenced as "assessment") that considers the entire pumping system, from energy inputs to the work performed as the result of these inputs.

The objective of a pumping system energy assessment is to determine the current energy consumption of an existing system and identify ways to improve system efficiency.

These requirements consist of

— organizing and conducting an assessment,

— analysing the data from the assessment, and

— reporting and documenting assessment findings.

This International Standard is designed to be applied, to open and closed loop pumping systems typically used at industrial, institutional, commercial, and municipal facilities, when requested.

This International Standard is focused on assessing electrically-driven pumping systems, which are dominant in most facilities, but is applicable with other types of drivers, such as steam turbines and engines, and drives such as belt.

The International Standard does not

a) specify how to design a pumping system,

b) give detailed qualifications and expertise required of the person using the International Standard although provides a list of body of knowledge in Annex C,

c) address the training or certification of persons,

d) specify how to implement the recommendations developed during the assessment, but does include requirements for an action plan,

e) specify how to measure and validate the energy savings that result from implementing assessment recommendations,

f) specify how to make measurements and how to calibrate test equipment used during the assessment,

g) specify how to estimate the implementation cost or conduct financial analysis for recommendations developed during the assessment,

h) specify specific steps required for safe operation of equipment during the assessment. The facility personnel in charge of normal operation of the equipment are responsible for ensuring that it is operated safely during the data collection phase of the assessment,

i) address issues of intellectual property, security, confidentiality, and safety.

2 Normative references

The following documents, in whole or in part, are normatively referenced in this document and are indispensable for its application. For dated references, only the edition cited applies. For undated references, the latest edition of the referenced document (including any amendments) applies.

© ISO/ASME 2015 – All rights reserved

ASME International
Provided by IHS under license with ASME
No reproduction or networking permitted without license from IHS
Licensee=Chongqing Institute of quality and Standardization 5990390
Not for Resale, 2015/7/22 06:49:48

ISO 17769-1, *Liquid pumps and installation — General terms, definitions, quantities, letter symbols and units — Part 1: Liquid pumps*

ISO 17769-2, *Liquid pumps and installation — General terms, definitions, quantities, letter symbols and units — Part 2: Pumping system*

3 Terms and definitions

For the purposes of this document, the terms and definitions given in ISO 17769-1 and ISO 17769-2, and the following apply.

3.1
system energy demand
minimum amount of energy which a pumping system in a specified process requires

3.2
components
individual items of equipment within a system

EXAMPLE Pump, motor, drive, valve, heat exchanger.

3.3
hydraulic power
water horsepower
power imparted to the liquid by the pump

3.4
electrical power input
power required to support the pumping system operation

3.5
specific energy
energy consumed to move a certain volume of liquid through the system

3.6
parasitic power
power imparted to the shaft of a pump and not used to move the fluid through the system

4 Identification of the assessment team, authority and functions

4.1 Identification of assessment team functions

The assessment team composed of knowledgeable personnel shall have members that are assigned responsibility and authority to carry out the following functions:

- resource allocation, in order to:
  - allocate funding and resources necessary to plan and execute the assessment,
  - exercise final decision making authority on resources,
  - oversee the eventual participation of non-facility personnel including contracts, scheduling, confidentiality agreements, and statement of work.
- coordination, logistics and communications, in order to:
  - obtain necessary support from facility personnel and other individuals and organizations during the assessment,

© ISO/ASME 2015 – All rights reserved
ASME International
Provided by IHS under license with ASME
No reproduction or networking permitted without license from IHS
Licensee=Chongqing Institute of quality and standardization 5990390
Not for Resale, 2015/7/22 06:49:48

— participate in organizing the assessment team and coordinate access to relevant personnel, systems, and equipment,

— organize, schedule activities and manage the assessment.

4.2 Assessment team structure, leadership and competency

The assessment team should comprise of personnel from cross functional backgrounds. It shall include:

— an assessor who has the pump system analysis competencies as described in Annex C;

— the host organization representative who has overall responsibility and ownership for the assessment;

— experts on the processes and the function of the system;

— experts on the maintenance practises of the pumping system;

— experts who can provide the team with cost data.

The assessment team may be from the host organization or enhanced by using outsourced specialists particularly considering the competence of the assessor

The host organization shall appoint the assessment team leader. This person may be a host facility employee or an external assessor. In small organisations, the team leader may be the competent assessor.

4.3 Facility management support

Facility management shall understand and support the purpose of the assessment.

Facility management shall allow assessment team members from the facility to participate in the assessment to the extent necessary.

The assessment team shall gain written support of facility management prior to conducting the assessment, as follows:

— commit the necessary funding, personnel, and resources to support the assessment;

— communicate to facility personnel the assessment's importance to the organization.

4.4 Communications

Lines of communication required for the assessment shall be established.

The assessment team shall provide clear guidance to facilitate communications among members of the assessment team so all necessary information and data can be communicated in a timely manner. This shall include administrative data, logistics information, as well as operational and maintenance data.

4.5 Access to facilities, personnel and information

The assessment team shall have access to:

— facility areas and pump systems required to conduct the assessment,

— facility personnel (engineering, operations, maintenance, ...), their equipment vendors, contractors and others, to collect information pertinent and useful to the assessment activities and analysis of data used for preparation of the report,

— other information sources such as drawings, manuals, data sheet, maintenance records, test reports, historical utility bill information, computer monitoring and control data, electrical equipment panels, and calibration records.

© ISO/ASME 2015 – All rights reserved

ASME International
Provided by IHS under license with ASME
No reproduction or networking permitted without license from IHS
Licensee=Chongqing Institute of quality and Standardization 5990390
Not for Resale, 2015/7/22 06:49:48

All data initially identified as essential to the assessment shall be obtained in discussions with knowledgeable facility staff.

4.6 Assessment objectives, scope and boundaries

The overall objectives and scope of the assessment including portion(s) of the facility and boundaries of the system(s) that are to be assessed shall be discussed and agreed upon at an early stage by the assessment team.

The assessment team shall develop a list of site specific objectives for each pumping system, such as performance improvement targets.

4.7 Action plan

4.7.1 General

An action plan for the assessment shall be developed and agreed upon by the assessment team and system owners in order to facilitate the assessment and to make it clear to all assessment team members how the assessment shall be conducted.

The plan shall be flexible and should accommodate various outcomes depending on findings during the assessment, among others:

a) establish information objectives, in particular:

- determine system boundaries (see 5.4);
- review information that has been collected before the start of the assessment;
- identify how much is known about the systems and what information has to be obtained;
- start with a level 1 assessment (see 5.1.2);

b) identify informational objectives for the assessment (see 5.1):

- determine how extensive the assessment is;
- identify the systems that are included in the assessment;
- identify what information is available and what is necessary to collect;
- identify information that is available on paper records (such as logs) or in the facility computer systems and what system parameters are necessary to measure;
- identify who is going to be involved and responsible for the collection of necessary data;

c) establish measurement requirements (see 5.6) in particular:

- identify whether a snapshot of the conditions is sufficient (level 2 according to Table 1) or if it is necessary to collect information during an extended period of time (level 3 according to Table 2);
- identify if permanently installed measurement equipment is available and trustworthy;

d) identify additional informational objectives and in particular true process demands (see 5.4);

e) identify the methods required to meet assessment informational objectives:

- identify how the data are going to be analysed, taking into account the recommendations from Annex B;
- identify tools/software programs that are going to be used;

© ISO/ASME 2015 – All rights reserved
ASME International
Provided by IHS under license with ASME
No reproduction or networking permitted without license from IHS
Licensee=Chongqing Institute of quality and standardization 5990390
Not for Resale, 2015/7/22 06:49:48

f) identify content of the report and responsibilities.

4.7.2 Assessment scheduling

The dates of the assessment, and dates and times of key meetings shall be designated in advance of beginning the assessment.

The assessment meetings shall include:

— kick-off meeting. It shall occur just prior to the commencement of the assessment. The purpose of this meeting is to review information to be collected in the initial data collection and evaluation (see 4.8) and establish the work schedule. At this meeting, the assessment team should discuss the safety protocols, tools, methods, measurement, metering and diagnostic equipment required;

— daily schedule(s) for the on-site assessment;

— periodic reporting to facility managers in the form of debriefings should occur as agreed-upon by the assessment team;

— wrap-up meeting at the conclusion of the onsite activities. It is designed to outline the assessment investigations and initial recommendations (see 5.8).

The assessment team shall determine corrective courses of action for irregularities that may or do occur during an assessment (e.g. the failure of a computerized records system).

4.8 Initial Data Collection and Evaluation

4.8.1 General

Before the start of the assessment, the initial data collection shall be made. To expedite the process, precollection data are optional.

NOTE This information is used in all assessment phases.

4.8.2 Initial facility specialist interviews

The assessment team shall collect information on operating practices and any specific operating considerations that affect energy use for the equipment through contact with personnel and specialists.

The assessment team shall also have access to facilities personnel who understand connected systems that will be influenced by changes made to the pumping system.

4.8.3 Energy project history

The assessment team shall collect and review information on energy saving projects, assessments, audits, baselines, or benchmarking already conducted for the pumping systems being assessed.

4.8.4 Energy cost

The assessment team shall collect cost data including electricity cost per kWh, or other similar terms, considering all charges such as demand charges, peak rates, time-of-the-day rate and any other costs up to the point of use. Where necessary, appropriate costs should be assigned to onsite generated electricity. These costs should be used in subsequent analyses. If electricity is generated on site the avoided cost or potential sales cost of the energy should be used.

The assessment team shall agree on the period during which the costs are considered valid.

The assessment team should also consider issues such as demand charges and trends to identify situations not made obvious by the use of average values.

© ISO/ASME 2015 – All rights reserved

ASME International
Provided by IHS under license with ASME
No reproduction or networking permitted without license from IHS
Licensee=Chongqing Institute of quality and Standardization 5990390
Not for Resale, 2015/7/22 06:49:48

From this information, the assessment team shall determine an average annual energy cost per kWh over the previous 12 months.

If a facility has established a marginal cost for energy, it may be used in the energy cost saving calculation

4.8.5 Initial system data

The assessment team shall:

— define the functional needs of the system(s);

— identify high energy consumption equipment;

— identify control method(s);

— identify throttle control systems;

— identify high, low or negative static head systems;

— identify inefficient devices (obvious signs of disrepair or incorrect operation);

— identify lower mean time before failure (MTBF) pump systems, which generally indicate poor efficiency operation (see Annexes F and H);

— identify small power input systems that have significant influence on facility reliability and efficiency. All of them shall be considered, not because of their energy consumption but for the consequence on the efficiency of the whole facility.

4.9 Objective check

Prior to conducting the assessment, the assessment team shall ensure that the action plan meets the stated assessment objectives.

The action plan of assessment and the objectives shall be reviewed for relevance, cost-effectiveness, and capacity to produce the desired results.

5 Conducting the Assessment

5.1 Assessment Levels

5.1.1 General

Depending on the needs of the host organization, one or more of the levels of assessment given in Table 1 shall be selected.

© ISO/ASME 2015 – All rights reserved
ASME International
Provided by IHS under license with ASME
No reproduction or networking permitted without license from IHS
Licensee=Chongqing Institute of quality and Standardization 5990390
Not for Resale, 2015/7/22 06:49:48

Table 1 — Assessment Level Overview

Activities	Level 1 assessment	Level 2 assessment	Level 3 assessment
Pre-screening opportunities	Required	Required	Required
Walk through	Optional	Required	Required
Identify systems with potential saving opportunities	Required	Required	Required
Evaluate systems with potential saving opportunities	Optional	Required	Required
Measurement of operating data for a typical single operating point	Optional	Required	Required
Measurement/data logging of systems with variable operating conditions	Not Applicable	Not Applicable	Required

NOTE 1 A level 1 assessment is a qualitative review with possible quantitative elements intended to determine the potential for significant energy savings based on further assessments and to identify specific systems that merit a greater level of attention.

NOTE 2 A level 2 assessment is a quantitative review intended to determine energy consumption and potential savings based on measurement of a single steady-state operating condition requiring a single set of measurements.

NOTE 3 A level 3 assessment is a quantitative review that takes varying system demands into account by monitoring the system over a time span long enough to capture the various operating conditions which require their own set of measurements.

Depending on the level of assessment, data shall be collected in accordance with Table 2.

5.1.2 Level 1 assessments

Level 1 assessment shall include gathering of system information for pumping systems considered for evaluation within the scope of the assessment.

Level 1 assessment shall start with the pre-screening.

During the pre-screening, the control methods for the different systems shall be noted. It shall be determined which systems are best suited for a closer evaluation. It should also be noted if changes to the pump system will affect other systems, thereby introducing constraints on potential optimization strategies for the pump system.

As much information as practical should be collected during the level 1 assessment.

The availability at the facility of some types of data (see 5.5) should also be reported during the level 1 assessment even if it is not collected.

A pre-screening worksheet shall be used to assist in this pre-screening exercise. A typical example of worksheet to aid in the data collection process is given in Annex E.

In general, the steps taken during the pre-screening shall include the following:

a) sort by driver size, annual operating hours, and estimated energy cost;

b) focus on centrifugal pumps operating at fixed speed;

c) focus on pumping systems that throttle and recirculate for flow control;

d) look for energy-waste symptoms such as large difference in supply and demand, commonly achieved through valve throttling and by-pass flows (see 5.5.5);

e) identify inefficient pumping systems via maintenance and operational staff interviews and review of maintenance records;

f) select for assessment those systems that appear most likely to exhibit savings potential.

© ISO/ASME 2015 – All rights reserved

ASME International
Provided by IHS under license with ASME
No reproduction or networking permitted without license from IHS
Licensee=Chongqing Institute of quality and Standardization 5990390
Not for Resale, 2015/7/22 06:49:48

From this information the assessment team shall make estimates regarding the potential for energy savings in each system and shall select the pumping systems that meet the criteria for level 2 or level 3 assessments.

5.1.3 Level 2 assessments

Level 2 assessments shall be performed when it is clear that the observed operating conditions are representative for the operation of the systems and the changes in operating condition are small or non-existent.

Level 2 assessments shall be performed using data taken from the facility information systems, in paper or electronic format, or by using portable measuring devices. The measurements shall cover a limited amount of time, thus giving a snapshot of the operating conditions at the time of measurement.

5.1.4 Level 3 Assessments

Level 3 assessments shall be made on pumps systems where conditions vary substantially over time. For such systems, the assessment team shall record the system performance data over the time period or capture data at the extreme duty points. This activity shall be associated with more extensive use of *in situ* monitoring to ensure that the operating conditions can be accurately determined at the various duty points (i.e. design point, normal, rated, maximum and minimum flow rates). The monitoring shall be made by connecting transducers to data logging equipment and recording the sensor output, or in some facilities, where historical information is stored, the relevant information should be downloaded from the facility information system.

Table 2 — Required and optional data for assessment level 1, 2 and 3

System information	Level 1 assessment	Level 2 assessment	Level 3 assessment
Description of the facility	Required	Required	Required
Pumping system inventory (provided prior to assessment start) for systems that meet pre-screening criteria - List of pumps - Pump description (including pumped media) - Pump type - Pump application - Physical location of pump - Installed motor data (rated nameplate power, voltage, full load amperage, and frequency) - Annual operational hours (or % operation) - Control method e.g. control valve, variable speed drive (VSD), bypass	Required	Required	Required
Operating parameters (including flow and pressure)	Optional	Required	Required
Pump curve(s)	Optional	Required	Required
Design point	Optional	Required	Required
Cavitation at pump or in system	Optional	Required	Required
Maintenance level (low, medium, high)	Optional	Required	Required
Equipment information (service type, time in service, shared duty, voltage)	Optional	Required	Required
Typical flow rates and variations thereof	Optional	Required	Required
Duration diagrams	Optional	Required	Required
Histograms	Optional	Required	Required

© ISO/ASME 2015 – All rights reserved
ASME International
Provided by IHS under license with ASME
No reproduction or networking permitted without license from IHS
Licensee=Chongqing Institute of quality and Standardization 5990390
Not for Resale, 2015/7/22 06:49:48

Table 2 *(continued)*

System information	Level 1 assessment	Level 2 assessment	Level 3 assessment
Maintenance costs	Optional	Required	Required
Process and instrument diagrams (PID)/Digital control system (DCS) screen-shots	Optional	Required	Required
Rating of any other drive system (e.g. steam turbine drive)	Optional	Required	Required

5.2 Walk Through

A walk through is required for level 2 and 3 assessments and may be required for some pumping systems undergoing a level 1 assessment.

The walk through shall entail examination throughout ensuring that the information provided to the assessment team reflects the configuration of the existing systems.

For the pumping systems undergoing level 2 and 3 assessments, after the walk through is completed, the information listed in 5.5 shall be collected using the methodologies specified in 5.6.

All components of the system shall be considered and pertinent information such as valve locations, locations of available pressure taps, flow meters, valve positions etc. should be noted.

During the walk through, information about the control methods for the different systems such as valve settings should be noted.

The assessment team shall also identify any existing conditions that are often associated with inefficient pumping system operation.

These conditions may be identified through the following potential indicators:

a) pumping systems where significant throttling takes place[1)]

b) pumping systems with recirculation of flow used as a control scheme;

c) pumping systems with large flow or pressure variations;

d) systems with multiple pumps where the number of operated pumps is not adjusted in response to changing conditions;

e) systems serving multiple end uses where a minor user sets the pressure requirements[1)];

f) cavitating equipment[1)];

g) high vibration and/or noisy pumps, motors or piping[1)];

h) equipment with high maintenance requirements (low MTBF) [1)],

i) systems for which the functional requirements have changed with time, but the pumps have not;

j) worn, eroded, corroded, distorted or broken impellers/diffusers/vanes or wear rings and casings (if available, this information can be provided by facility staff);

k) clogged pipelines or pumps (usually requires historical data to be discovered);

l) systems which have a low pumping system efficiency indicator (for information, see Annex H);

m) seized valves or leaking recirculation valves;

n) sealing systems, especially high temperature, requiring cooling (see B.4.3);

---

1) Possible indication of excessive parasitic power level (see Annex H).

© ISO/ASME 2015 – All rights reserved

ASME International
Provided by IHS under license with ASME
No reproduction or networking permitted without license from IHS
Licensee=Chongqing Institute of quality and Standardization 5990390
Not for Resale, 2015/7/22 06:49:48

o) lack of proper inlet screening, where appropriate.

5.3 Understanding system functional requirements

The assessment team shall determine what are the normal operating conditions as well as operation under extreme and abnormal conditions, knowing the limits within which the system is designed to operate and how the operating conditions are distributed overtime.

If accurate records are not available and the facility personnel may be unable to supply the needed information, the assessment team shall monitor the system over some period of time in order to establish the demands on the system.

5.4 Determining system boundaries and system energy demand

The assessment team shall determine the system boundaries and system energy demand of each pumping system undergoing a level 2 or 3 assessment.

A pumping system assessment shall consider the overall efficiency of the existing system.

NOTE If the subsystems are part of a larger facility system, the system boundary is complex and the boundary is determined prior to any measurements and calculations

5.5 Information needed to assess the efficiency of a pumping system

5.5.1 General

After the decision is taken on which pumping systems require further investigation, the following information from 5.5.2 to 5.5.6 shall be gathered.

The assessment team shall determine the data collection needs for each system being evaluated.

The assessment team shall maintain quality assurance in the design and execution of a measurement plan as a consistent, repeatable, and reproducible process.

The measurement plan shall adhere to principles of safety, transparency, and reliability.

The measurement plan shall include the measurements required to develop an annual energy consumption baseline for the pumping system. This is typically done by taking instantaneous flow, pressure and electrical measurements and determining operating hours at varying system conditions.

Cross-checking should be done to ensure the data are correct.

5.5.2 Electrical motor/drive information

Initial motor/drive information to be collected from the nameplate (if available) or manufacturer's data sheets shall include:

a) line frequency;

b) motor size (rated power);

c) motor rated speed;

d) motor rated voltage;

e) motor full load amps (FLA) - the current to the motor when operating at rated power;

f) motor power rating information;

g) nominal efficiency or efficiency class (if provided);

© ISO/ASME 2015 – All rights reserved
ASME International
Provided by IHS under license with ASME
No reproduction or networking permitted without license from IHS
Licensee=Chongqing Institute of quality and Standardization 5990390
Not for Resale, 2015/7/22 06:49:48

h) motor type and characteristics;

i) type of drive (e.g. variable frequency drive, belt, gear, direct);

j) motor history (e.g. original, rewound, replaced).

5.5.3 Pump information

5.5.3.1 Rotodynamic pumps

This information should be obtained from the pump nameplate (if available) and any records that may be kept on file for the pump.

If the information from the nameplate and records differ, this should be noted and addressed later in the assessment of the system. Pump information required (when available) shall include:

a) type of pump and model;

b) manufacturer name;

c) serial number;

d) customer tag number;

e) number of stages;

f) type of drive;

g) nominal speed – (r/min);

h) design point (flowrate and head);

i) impeller diameter (installed and maximum);

j) pump performance curves, if available, including rated total head, flow, power, efficiency and net positive suction required (NPSHR),

k) maintenance records;

l) pump cavitation or recirculation problems;

m) sealing system data.

5.5.3.2 Positive displacement (PD) Pumps

This information should be obtained from the pump nameplate (if available) and any records that may be kept on file for the pump.

If the information from the nameplate and records differ, this should be noted and addressed later in the assessment of the system. Pump information required (when available) shall include:

a) type of pump and model;

b) manufacturer name;

c) serial number;

d) customer tag number;

e) pump description/model number;

© ISO/ASME 2015 – All rights reserved

ASME International
Provided by IHS under license with ASME
No reproduction or networking permitted without license from IHS
Licensee=Chongqing Institute of quality and Standardization 5990390
Not for Resale, 2015/7/22 06:49:48

f) rated data:

— speed (r/min);

— pressure;

— temperature;

— power;

g) system data (operating conditions);

h) relief valve setting;

i) pump performance curves;

j) maintenance records;

k) pump cavitation, recirculation line, or other operational problems;

l) sealing system.

5.5.4 Liquid properties information

Required liquid information shall include:

a) name of the liquid;

b) dynamic viscosity;

c) temperature;

d) density;

e) presence of solids and their characterization;

f) vapour pressure at running pressure and temperature conditions;

g) free gas percentage, when applicable;

h) hazards,

i) inflammability.

5.5.5 Detailed system data

Required systems data information shall include:

a) system layout,

b) unusual operating conditions;

c) PID diagrams,

d) pump control method:

— variable speed drive (VSD);

— throttled (valve percentage open if available);

— by-pass/recirculation;

— on/off;

— pumps in series or in parallel, or split duty;

© ISO/ASME 2015 – All rights reserved
ASME International
Provided by IHS under license with ASME
No reproduction or networking permitted without license from IHS
Licensee=Chongqing Institute of quality and Standardization 5990390
Not for Resale, 2015/7/22 06:49:48

— not controlled (pumps just run).

For rotodynamic pumps, the following additional information shall be collected:

— static head and if possible system curve;

— net positive suction head available (NPSHA);

— load profile. Through discussion with operating personnel, note approximate annual, seasonal, weekly, and daily operating hours at various flows.

For PD pumps, the following additional information shall be collected:

— discharge pressure;

— suction pressure;

— relief valve set pressure;

— net positive inlet pressure available (NPIPA).

Additional information should be collected on NPSHA for rotodynamic pumps and NPIPA for PD pumps, when needed.

5.5.6 Measured data

5.5.6.1 Electrical data

Required electrical data shall include:

— power;

— actual motor voltage and current to calculate power.

5.5.6.2 Operating system data

Sufficient operating data should be collected during the assessment to determine where energy is expanded in the system. This should include:

— flowrate in each flow circuit of the system;

— as stated;

— pump shaft (r/min), when appropriate;

— control valve set points and valve positions

— supply and destination tank levels and pressures

— installed equipment in operation.

5.6 Data collection

5.6.1 System information

When possible, the assessment team shall identify the system curve of the pumping system. For most systems, the system curve may be calculated from two different operating points on the curve: the static head at zero flow and one operating point.

NOTE The system curve is essential for the understanding of the complete pumping system and the consequences resulting from changes to any part of the system. In some rare cases it is impossible to determine a system curve; however, the pump operating point can still be determined.

© ISO/ASME 2015 – All rights reserved

ASME International
Provided by IHS under license with ASME
No reproduction or networking permitted without license from IHS
Licensee=Chongqing Institute of quality and Standardization 5990390
Not for Resale, 2015/7/22 06:49:48

Demand variations as a function of time shall be established so that the appropriate measurements can be made.

5.6.2 Measurement of pump and motor operating data

The primary required data to be measured shall be head, flow, power, and operating time.

If the operating conditions of the pumping system are constant or only vary minimally in time, a snapshot of the operating conditions may be enough to assess the system.

If the system demand varies over time, the assessment team shall determine if the system needs to be monitored over time and what time period is reasonable to get a representation of all operating conditions.

Operating data may also be used if readily available in the facility process control or database of historical operating conditions.

Uncertainty on measurements and uncertainty on final results should be estimated during the evaluation of the assessment.

5.6.3 Pressure

Pressure measurements should be made using calibrated instruments with the ideal measurement location being approximate 2 diameters of straight pipe, from inlet/outlet flanges if available.

To measure pump efficiency, pressure measurements should be made close to the pump on both the suction and the discharge side.

When measuring pump performance it is recommended that head losses between the suction and discharge head measurement points and the pump be estimated.

For accurate calculation of the pump total head, the velocity and the instrument elevation shall be taken into account.

5.6.4 Flow

The system flow rate shall be determined to establish pump and system efficiencies. Flow rates shall be measured using properly sized instruments, whether it be for an individual pump or total system flow.

Measurements shall be made with calibrated flow meters that are properly installed into the system and known to be accurate across the range of measured conditions. The flow meter should be installed according to the manufacturer's recommendations. When it is necessary to use portable flow meters, verification of the measurements should be performed by re-installing the flow meter in an alternate location or using multiple measurement techniques. If large variations are found, then the measurements shall be considered unreliable.

If the flow rate is determined from the pressure drop across a component with known characteristics or by using data from the pump manufacturer's performance curve, the data should be cross-correlated with both pressure and power measurements or by using multiple measurement techniques if there is doubt about the accuracy of the measurements.

5.6.5 Input power

Whenever possible, the input power should be measured directly using a power meter, which should give the most accurate results. When it is not possible to measure power directly, an acceptable alternative shall be to measure voltage and current delivered to the motor. Then using the estimated power factor, the motor input power shall be calculated. If a power drive system is used, the input power shall be measured before the variable frequency drive.

Electrical measurements shall be performed only by a qualified person.

© ISO/ASME 2015 – All rights reserved
ASME International
Provided by IHS under license with ASME
No reproduction or networking permitted without license from IHS
Licensee=Chongqing Institute of quality and standardization 5990390
Not for Resale, 2015/7/22 06:49:48

5.7 Cross validation

When the needed parameter is not directly measurable, it may be estimated through measures of other parameters, such as:

— pump head combined with pump head curve to estimate flow rate;

— electric power combined with motor performance curve (or estimates) to estimate shaft power, and then use the shaft power and pump shaft power curve to estimate flow rate;

— measured valve position and flow rate combined with the valve characteristic curve to estimate differential pressure;,

— measured drawdown and fill times, along with well or sump dimensional data to estimate pump flow rate.

Such estimation methods may be used for preliminary quantification of potential energy savings opportunities and to help determine whether the magnitude of savings is sufficient to warrant further investigation.

NOTE It is beyond the scope of this International Standard to detail the various cross-validation techniques, but they are vital tools in the assessment and solution development process.

5.8 Wrap-up meeting and presentation of initial findings and recommendations

The presentation of findings and preliminary recommendations shall be conducted as final step in conducting the assessment. This wrap-up meeting should be attended by the entire assessment team. During this meeting, outstanding questions and issues from the assessment team should be addressed. The tentative results of the assessment shall be formally presented and should include but not be limited to:

— review of the assessment process used;

— efficiency of the system(s) and components assessed;

— tentative recommended improvements, with preliminary energy and cost savings, if available;

— discussion of any further analysis recommended, and;

— any general comments and observations.

The results presented shall be qualified as preliminary, subject to further analysis and refinement. Target dates for the delivery of a draft and final versions of the written report shall be set by mutual agreement.

For more information, see Annex B.

6 Reporting and documentation

6.1 Final assessment report

At the conclusion of the onsite assessment and any required follow-up data analysis, the assessment results shall be reported in a final written report, as described in Annex A.

6.2 Data for third party review

The report or other documentation delivered with the report shall include sufficient raw data from the assessment so that the analyses performed in 5.6 can be confirmed by a third party. This documentation shall be structured so it can be easily accessed by verifiers and other persons not involved in its development.

© ISO/ASME 2015 – All rights reserved

ASME International
Provided by IHS under license with ASME
No reproduction or networking permitted without license from IHS
Licensee=Chongqing Institute of quality and Standardization 5990390
Not for Resale, 2015/7/22 06:49:48

6.3 Review of final report by assessment team members

Before the assessment report is finalized, members of the assessment team shall review the assessment report for accuracy and completeness and provide comments. Upon review of the draft report and requests for modifications, the assessment team shall provide a consensus acceptance, and then prepare and issue the report in final form.

ASME International
Provided by IHS under license with ASME
No reproduction or networking permitted without license from IHS
Licensee=Chongqing Institute of quality and Standardization 5990390
Not for Resale, 2015/7/22 06:49:48
© ISO/ASME 2015 – All rights reserved

Annex A
(normative)

Report Contents

A.1 Executive Summary

This section shall condense and summarize the report in brief. The executive summary shall provide an overview of:

a) facility background, products made and energy objectives;

b) objectives and scope of the assessment;

c) system(s) assessed and measurement boundaries used;

d) annual energy usage;

e) performance opportunities identified with associated energy and cost savings;

f) estimated energy and cost savings ;

g) list of recommendations to accomplish the estimated energy and cost savings identified.

A.2 Introduction and facility information

Brief description and background, team and scope of the assessment shall be included in this section.

A.3 Assessment objectives and scope

This report section shall contain a brief statement of the assessment's objectives. The report shall identify the boundaries of the specific system(s) on which the assessment was performed and why the boundaries were selected. This report section shall include a description of the general approach and methodology used to conduct the assessment.

A.4 Description of system(s) studied in assessment and significant system issues

The report shall include a detailed description of the specific system(s) on which the assessment was performed. Depending on the system assessed, the discussion of system operation can be extensive and should be supported by graphs, tables and system schematics. Supporting documentation should also be included to clarify the operation of the system components and their interrelationships.

Any significant system issues shall be described, including an operational review of system. Any existing best practices found (methods and procedures found to be most effective at energy reduction) shall be documented.

© ISO/ASME 2015 – All rights reserved

ASME International
Provided by IHS under license with ASME
No reproduction or networking permitted without license from IHS
Licensee=Chongqing Institute of quality and Standardization 5990390
Not for Resale, 2015/7/22 06:49:48

A.5 Assessment data collection and measurements

The methods used to identify and interview key facility personnel, obtain data, and conduct measurements shall be identified, including an overview of the measurement plan. Relevant data for level 2 and 3 assessments shall include:

— definition of system requirements and a determination of how system operation changes during the year (drawings, system process data);

— pump total head (TH), flow and system estimated curve;

— electrical energy consumption data;

— determination of pump operating hours and flow intervals;

— pump performance information, when available;

— measurement or estimation of system losses.

This section should also include a discussion of data accuracy and the need for verification before the recommended projects are approved.

A.6 Data analysis

The report shall include the outcome of the measurements and data analysis in accordance with site specific assessment objectives, assessment plan of action and statement of work. Any significant analytical methods, measurements, observations, and results from data analysis from completed action items shall be documented.

A.7 Annual energy consumption baseline

If sufficient data exist, the assessment report shall contain the baseline of total annual energy consumption for the pumping system. The analytical method used to develop the annual energy consumption baseline (see 5.5.1) shall be described. Facility functional and production process observations and information shall be reported.

The report shall clearly describe the assessment baseline as a basis for both routine and non-routine adjustments. Adjustments are calculated from identifiable physical facts with respect to changes in the physical facility and production process. The report shall provide sufficient information on the facility functional baseline during the assessment to provide a basis for adjustments.

NOTE 1 Routine adjustments are those energy-governing factors that are expected to change such as production volume variations. Baseline relationships of production dependent and time dependent system energy consumption are clearly stated.

NOTE 2 Non-routine adjustments are related to factors that are not usually expected to change during the short-term. Factors such as facility size, the design, type and number of production lines involving pumping systems are examples of non-routine adjustments.

A.8 Performance improvement opportunities identification and prioritization

The analysis shall quantify estimates of energy reduction and energy cost savings from recommended performance improvement opportunities. Additional calculations may address other energy and non-energy benefits. The report shall identify the methods of calculation and software models used with assumptions clearly stated.

Performance improvement opportunities can include those from maintenance improvements; operational improvements; equipment upgrades and replacement; revising control strategies; process improvements and change-over; and other actions that reduce energy consumption.

© ISO/ASME 2015 – All rights reserved
ASME International
Provided by IHS under license with ASME
No reproduction or networking permitted without license from IHS
Licensee=Chongqing Institute of quality and Standardization 5990390
Not for Resale, 2015/7/22 06:49:48

Details on performance improvement opportunities to be documented and reported shall include a sufficiently detailed description of the actions required for project implementation. To aid in the selection of projects for implementation, the assessment team should categorize the opportunities identified to be of high, medium or low priority based on factors such as

— energy and cost savings;

— likelihood of achieving projected savings;

— likelihood of long project life with sustained savings;

— impact to on-going operations;

— changes or modifications necessary for the existing equipment;

— time and cost for implementation;

— complexity of implementation steps;

— potential parallel benefits (e.g. improved profitability, improved reliability and maintenance costs, improved operations, lower environmental impact).

In the analysis section of the report, the pumping system energy consumption baseline shall be established and energy savings opportunities developed.

For all assessment levels, the analysis for energy consumption baseline development and proposed recommendations should be performed in sufficient detail to allow facility staff to understand all parts of the analysis. If software is used, the data entered into the software shall be clearly defined. The supporting analysis data may include spreadsheets, diagrams, software output screen captures, and calculations. The steps, assumptions and calculations of the analysis should be presented in a logical detailed format that can be understood by other engineering professionals for third party verification if required.

This part of the assessment may also address other energy and non-energy benefits such as improving resource utilization, reducing per unit production cost, reducing life cycle costs, and improving environmental performance. These benefits can be mutually agreed upon with facility management.

NOTE The amount of detail included in the energy efficiency recommendations vary considerably for each assessment level.

Recommendations are typically classified as operation and maintenance recommendations (OMs) or as energy conservation measures (ECMs). The recommendations reviewed in this report section shall be prioritized in order based on facility staff acceptance and cost effectiveness. Each subsequent measure should include the interactive savings effect of the previously recommended measure. Consideration must also be given to projects that may be easily implemented versus improvements that may not be easily pursued until facility production lines are out of service.

The presentation of each measure should be limited to a brief description of the proposed improvement and a summary of the benefits. If needed, it is also appropriate to recommend a higher level assessment before the measure is pursued.

General observations of non-pumping system related energy saving opportunities should also be discussed.

A.9 Recommendations for implementation activities

Details on performance improvement opportunities shall include the next steps needed to move from the identified performance improvement opportunities to implementation of the listed measures. Methods for refining data analysis as needed, and for obtaining reliable implementation cost estimates should be addressed. Methods for optimizing and maintaining system performance following implementation of adopted measures should be identified.

© ISO/ASME 2015 – All rights reserved

ASME International
Provided by IHS under license with ASME
No reproduction or networking permitted without license from IHS
Licensee=Chongqing Institute of quality and Standardization 5990390
Not for Resale, 2015/7/22 06:49:48

Implementation cost estimates for the performance improvement opportunities, if developed as an optional activity, are intended to be screening or feasibility estimates and could also include preparing metrics such as return on investment and payback period.

The assessment report should note that further engineering analysis be performed prior to implementing the recommendations contained in the assessment report.

A.10 Appendices

Information that is lengthy and not required for the presentation of the report should be included in appendices to ensure clarity of the body of the report. Detailed supporting data, such as energy consumption calculations, cost savings calculations, and economic analysis, should be referenced and included in the report appendices.

© ISO/ASME 2015 – All rights reserved
ASME International
Provided by IHS under license with ASME
No reproduction or networking permitted without license from IHS
Licensee=Chongqing Institute of quality and Standardization 5990390
Not for Resale, 2015/7/22 06:49:48

Annex B
(informative)

Recommendations on efficient system operation and energy reduction - Examples

B.1 General recommendations for efficient system operation

The operating characteristics of pumps should match the characteristics of load and piping resistance, so as to keep the pumps running in accordance with the manufacturer's specifications.

For any large power system with long operation time, measurement of pressure, flow rate, and power should be made at relevant points in the system regularly to test the efficiency of operation in order to ensure that the system is operated efficiently.

Preferably the pump should operate at the best efficiency point (BEP) and in any case not outside the allowable operating range (AOR) defined by the pump manufacturer (see Figure B.1).

ASME International
Provided by IHS under license with ASME
No reproduction or networking permitted without license from IHS
© ISO/ASME 2015 – All rights reserved
Licensee=Chongqing Institute of quality and Standardization 5990390
Not for Resale, 2015/7/22 06:49:48

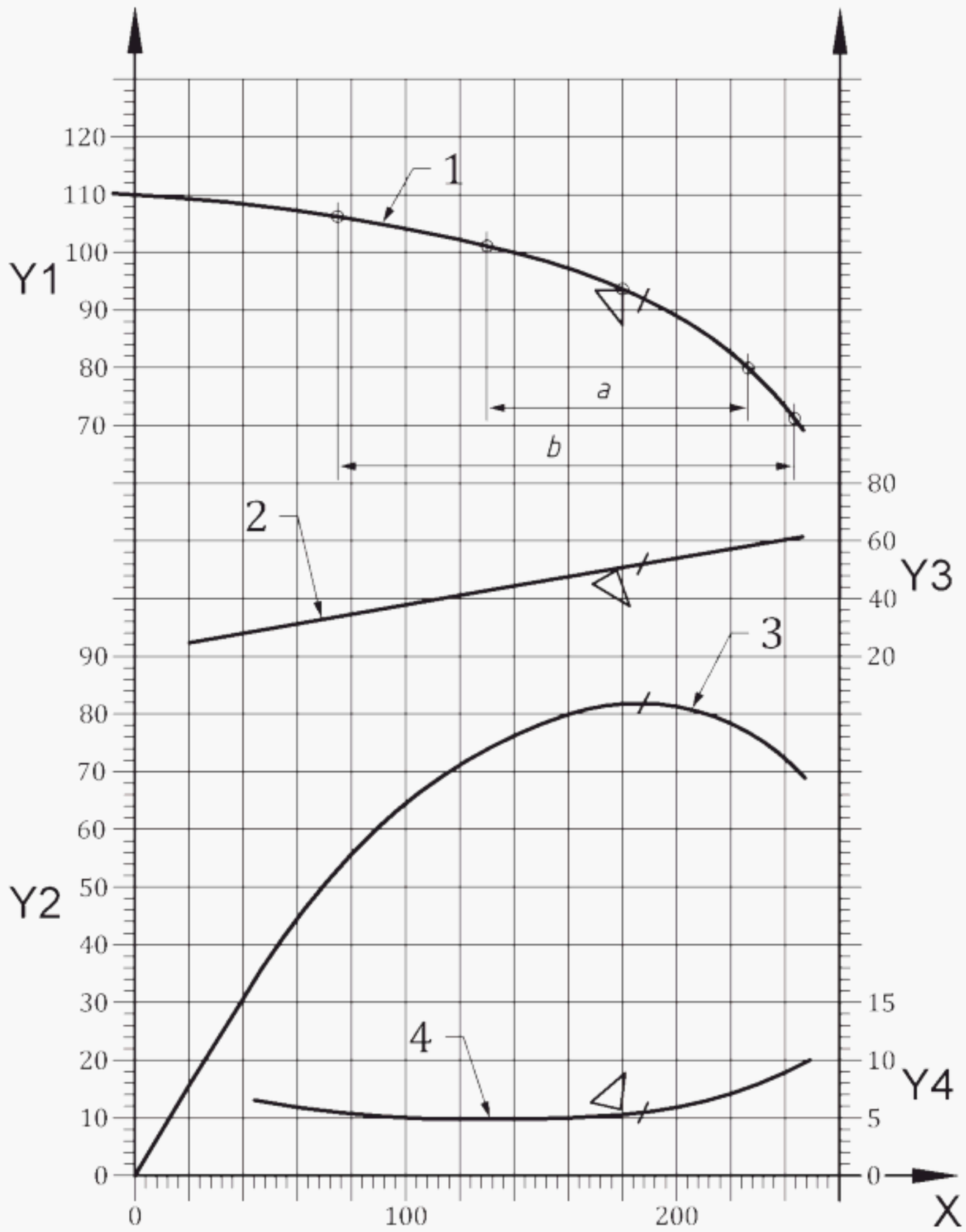

Key

Y1	head, expressed in meters
Y2	efficiency, expressed in percentage
Y3	power, expressed in kilowatts
Y4	NPSH3, expressed in meters
X	Flow rate, expressed in cubic meters per hour
1	head
2	power
3	efficency
4	NPSH3
a	Preferred operating region.
b	Allowable operating region.

NOTE High pump efficiency does not guarantee high system efficiency, especially if the pump is oversized vs. the system demand.

Figure B.1 — Example of curves and allowable operating range

The example curve in Figure B.2 shows how fast the mean time between failures (MTBF) falls off when the pump operating point moves away from BEP.

© ISO/ASME 2015 – All rights reserved
ASME International
Provided by IHS under license with ASME
No reproduction or networking permitted without license from IHS
Licensee=Chongqing Institute of quality and standardization 5990390
Not for Resale, 2015/7/22 06:49:48

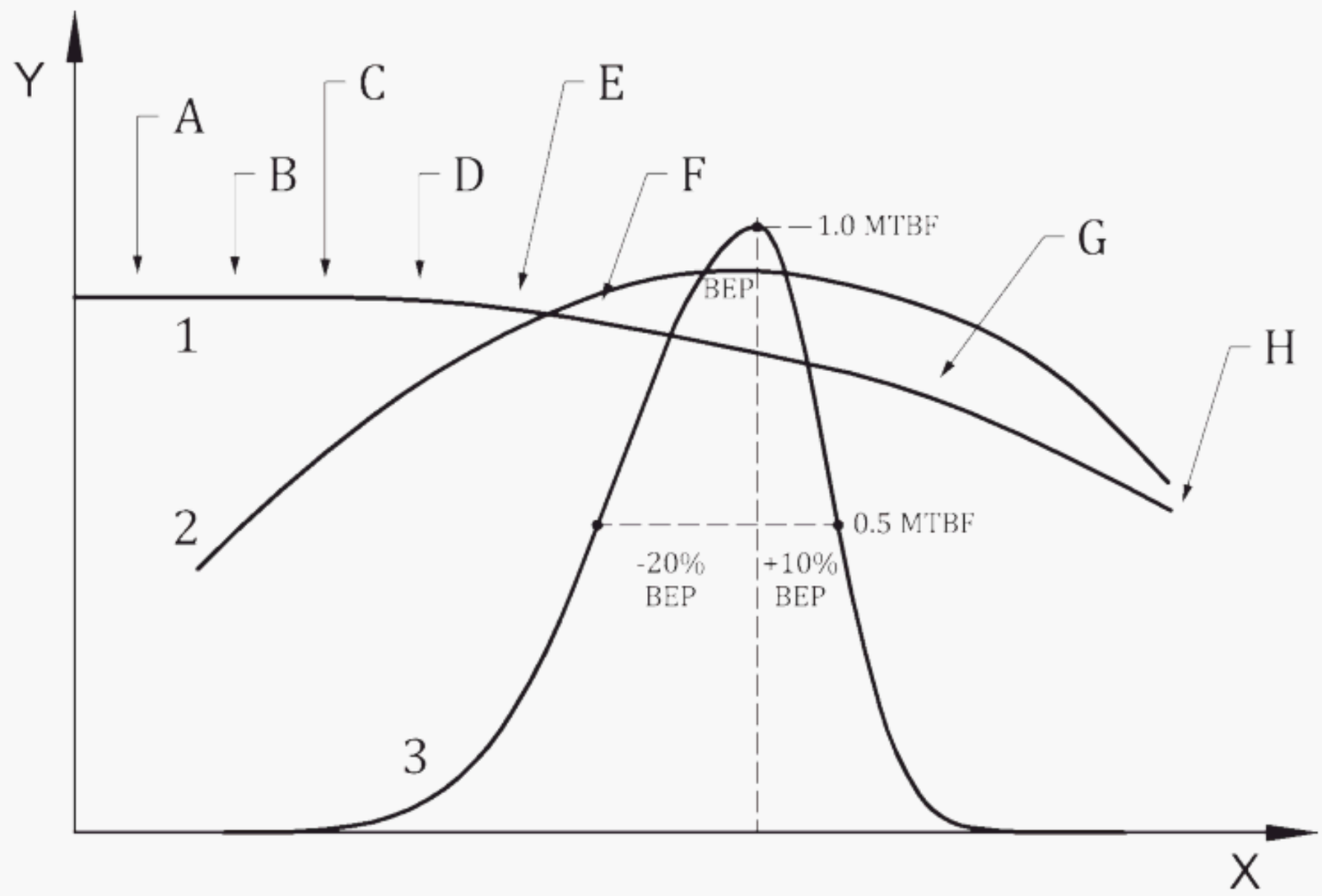

Key

A	high temperature rise	Curve 1	pump curve $H(Q)$
B	low flow cavitation	Curve 2	pump efficiency curve
C	low flow bearing and seal life	Curve 3	reliability curve/MTBF
D	reduced impeller life	X	flow in percent of flow at BEP
E	suction recirculation	Y	head in percent of head at BEP
F	discharge recirculation		
G	low bearing and seal life		
H	cavitation		

Figure B.2 — Example of pump reliability curve

Manufacturers normally indicate a preferable operating region around BEP and sometimes also an allowable operating region. How these regions are defined differ between manufacturers. Care should be exercised to operate as close to BEP as possible. A deviation of −20 % or +10 % from the flow at BEP could mean that the mean time between failures (MTBF) is cut in half! For pumps with variable flow, the selection of the best efficiency point in relation to the operating range needs careful consideration.

B.2 System management to ensure economic operation

B.2.1 General

Three-phase asynchronous motors used for driving pumps should be sized to operate at or close to maximum efficiency for all operating conditions (normally 50 % to 100 % load and 35 % to 100 % load for high efficiency motors according to IEC 60034 series). For other types of drive, the operating range should be in accordance with manufacturer recommendations.

Rules for operation management, maintenance and repair should be established.

Operation performance logs and technical archives should be kept and maintained.

Personnel responsible for management and operation should be adequately trained for their positions.

© ISO/ASME 2015 – All rights reserved

ASME International
Provided by IHS under license with ASME
No reproduction or networking permitted without license from IHS
Licensee=Chongqing Institute of quality and Standardization 5990390
Not for Resale, 2015/7/22 06:49:48

B.2.2 System management recommendations

Efficient system components should be used and operated in such a way that high system efficiency is maintained.

For systems operating a long time under part load or having large demand changes, proper measures should be taken in order to maintain high operating efficiency for all conditions, when it is technologically and financially practicable.

Process requirements should be evaluated to determine that the system is running efficiently, within applicable quality, health and safety requirements. If the system is not running within the established boundaries, a plan for correction should be made and implemented.

B.2.3 System updating and improvement

For any system that fails to meet the established efficiency requirements after an assessment, the system operation should be examined and a report should be produced to document the current operation, including: test method and data analysis, efficiency improvement measures, and responsibilities.

This report should be kept in an accessible location.

When pump systems have been installed or undergo updates, an assessment should be conducted to establish base operating conditions.

B.2.4 Pump system piping

Increasing the internal pipe diameter is usually the most effective way to decrease the pipe friction losses and the resulting energy consumption. For example, 10 % diameter increase leads to a decrease of approximately 40 % in losses for the turbulent flow region. In general, flow velocities should be kept as low as practically possible in regard to the liquid material suspended being pumped.

The number of pipe bends should be minimized and the radius of curvature of turns should be as large as economically feasible in order to minimize friction losses. A minimum of 1,4 times longer than the pipe diameter is recommended for such turns.

Rapid diameter changes should be avoided. Diffusers should be used when possible.

When selecting components, considerations should be made to minimize the friction losses across the equipment. The equipment should be suitable for the liquid being pumped.

The elevation and pressure on the surface of liquid in a tank affects the systems static head. Wherever possible, static head should be minimized.

B.3 Common causes and remedies for excessive energy consumption for rotodynamic pump

B.3.1 General

It is important that a thorough understanding of system requirements be established before the application of any analysis technique. This includes distinguishing between system design specifications and actual process requirements before evaluating energy savings opportunities.

It should be understood that once physical or operational changes are made, the system curve may likely change, resulting in different system requirements and the need for another iteration of system analysis. Each time the system is modified there is the potential to redefine optimal operation for that system.

© ISO/ASME 2015 – All rights reserved
ASME International
Provided by IHS under license with ASME
No reproduction or networking permitted without license from IHS
Licensee=Chongqing Institute of quality and standardization 5990390
Not for Resale, 2015/7/22 06:49:48

B.3.2 Reduce system head losses

Examples of opportunities to reduce the system head are shown below. This list is not comprehensive. Rather, it shows some of the most common opportunities identified by experience:

a) remove/reduce unnecessary throttling and/or recirculation flows;

b) clean or perform maintenance on fouled components such as heat exchangers;

c) isolate flow paths to non-essential equipment or equipment that is not operating;

d) maintain proper fill and venting of elevated sections of pipe;

e) reduce/remove sediment and scale build-up in pipelines, heat exchangers, and process components;

f) do not employ an air gap between pipe discharge and receiving tank when isolation is not necessary;

m) adjust flow rate to meet process demands without exceeding them;

k) maintain the design pumping temperature when pumping viscous products;

i) separate secondary systems that demand very low flow rates with a head much higher than required by the main system.

B.3.3 Reduction of system flowrate

Examples of opportunities to reduce the system flow rate are shown below. This list is not comprehensive. Rather, it shows some of the most common opportunities identified by experience:

j) maintain the optimum differential temperatures in heat exchanger applications, preferably considering exchanger design efficiency;

l) isolate unnecessary flow paths, unnecessary pump recirculation and leaking valves, check valves, minimum flow valves;

l) reduce the flowrate in the batch processes that are basically fill and drain, as long as it does not create an unacceptable change to the production schedule;

m) turn off pumps when flow is not needed.

B.3.4 Ensuring that components operate close to best efficiency

The operating efficiencies of the various components that comprise the pumping system can vary substantially depending on where they operate on their respective curves. As a rule, motors should operate where their efficiency curve is flat. Rotodynamic pumps should preferably be operated close to BEP (see Figure B.2). Operation away from BEP quickly reduces pump efficiency and reliability.

It should also be noted that different types of electric motors and other drivers can differ substantially in efficiency.

NOTE Excess system energy consumption can occur when installed equipment is operated away from the best efficiency point. There are many possible reasons but most of them are related to changes from projected specification, change in system requirements; all of them will lead to less energy efficient systems. Some of the more common factors, are listed below:

— during the initial design stage of a system and before the system has been in operation, there are many uncertainties. Selection of equipment tends to be conservative and this in addition to service factors and design margins will often result in oversized systems,

— systems designed for excessive requirements;

— when the actual system requirement is considerably different than the pump capability, the system efficiency will inherently suffer (and, it might be noted, so will reliability);

© ISO/ASME 2015 – All rights reserved

ASME International
Provided by IHS under license with ASME
No reproduction or networking permitted without license from IHS
Licensee=Chongqing Institute of quality and Standardization 5990390
Not for Resale, 2015/7/22 06:49:48

— changes in system conditions, either due to changes in requirements or aging of the system itself or due to changes of specific component and equipment;

— lack of understanding that energy consumption might accounts for largest cost when it comes to make decision in new investments and therefore installing equipment with higher life cycle cost than possible.

B.3.5 Change pumping system run time

Opportunities based on changing system run time are often used where the system requirement is dominated by friction head. Such uses include, but are not limited to:

— pumps/lift stations,

— systems with electric rates that change based on time of use or have a demand component,

— systems that run when the process is not operating. Often a recirculation loop is employed rather than turning a pump off when flow is not needed,

— systems with multiple parallel pumps that are running more pumps than necessary to fulfil the process demands.

A good practice to enhance pumping efficiency is to monitor specific energy (see Annex F).

In most instances pumping capacity is larger than needed. This is especially true in applications involving storage, for example filling up tanks in industrial applications, pumping down wet wells or filling up reservoirs in municipal applications. The pumps are started and stopped by the liquid level in the wet well or the tank/reservoir. Lower flow rates will mean an *increased* run time but on the other hand lower flow rates will result in savings due to the reduced friction losses.

In installations with high demand changes lowering flow rates could mean lower power demand and hence cost savings can be achieved. (This does not always mean that energy savings are achieved).

In many applications pumps may run longer than necessary. Examples of such applications are multiple pumps running in parallel and producing more flow than necessary. This is not uncommon in applications involving cooling towers and chillers. The operators are not switching pumps off when they could be turned off, but let them run even if they are not needed. This situation can be recognized by measuring the temperature difference over the cooling tower/ heat exchanger. If the temperature difference is lower than optimal, the flow rate is too high. In such a situation, one or more pumps could be turned off or the capacity might be lowered by changing the speed of the pump(s).

B.4 Examples of basic energy reduction opportunity calculations for rotodynamic pumps

B.4.1 Calculation of existing and post assessment energy consumption

B.4.1.1 General

The objective is to minimize the energy consumption of the existing system. This is accomplished by evaluating the operation of the existing system, identify possible reductions in system head, flow rate, and run time, and running the system components closer to their optimum conditions.

© ISO/ASME 2015 – All rights reserved
ASME International
Provided by IHS under license with ASME
No reproduction or networking permitted without license from IHS
Licensee=Chongqing Institute of quality and Standardization 5990390
Not for Resale, 2015/7/22 06:49:48

The hydraulic power imparted to the liquid by the pump is as shown in Formula (B.1)

$$P_{\mathrm{w}} = \frac{QH\rho}{367000} \text{ (SI units) or } P_{\mathrm{w}} = \frac{QH\rho}{331232} \text{ (US units)} \tag{B.1}$$

where

P_{w} is the hydraulic power supplied by the pump expressed in kilowatts (kW);

Q is the flow rate expressed in cubic meters per hour (m^3/h) or gallon per minute (gpm);

H is the total head, at flow rate Q, expressed in meters or feet);

ρ is the liquid density expressed in kilogram per cubic meter (kg/m^3) or pound per cubic foot (lb/ft^3).

The electrical power P_{e} required to support the pumping system operation is shown in Formula (B.2)

$$P_{\mathrm{e}} = \frac{P_{\mathrm{w}}}{\eta_{\mathrm{P}}\eta_{\mathrm{M}}\eta_{\mathrm{D}}} \tag{B.2}$$

where

η_P is the pump efficiency;

η_M is the motor efficiency;

η_D is the drive efficiency (if no drive installed set η_{D} to 1).

To optimize pump systems, the following operations are performed:

— minimization of the flowrate;

— minimization of the pump head;

— optimization run time;

— maximization of the component efficiency.

Improvements can be accomplished using existing equipment. Additional savings can sometimes be achieved through equipment replacement.

B.4.2 Example

The following example demonstrates the calculations to determine:

— initial power consumption;

— power consumption after making improvements in operation;

— power consumption after replacing components.

Figure B.3 illustrates a transfer liquid system from Tank A to Tank B. A recirculation line maintains constant pump discharge pressure. A level control valve maintains constant level in Tank B: 4,5 bar (65 psi) upstream of the pressure reducing valve. The pump is direct motor-driven.

The following data are recorded:

— liquid: water temperature 20 °C (68 °F) and density 998,3 kg/m^3 (62,32 lb/ft^3)

— plant electric cost: $ 0,10/kWh

— measured flowrate: 450 m^3/h (2 000 gpm)

© ISO/ASME 2015 – All rights reserved

ASME International
Provided by IHS under license with ASME
No reproduction or networking permitted without license from IHS
Licensee=Chongqing Institute of quality and Standardization 5990390
Not for Resale, 2015/7/22 06:49:48

— measured process flowrates: 340 m^3/h (1 500 gpm) to tank B, 110 m^3/h (500 gpm) recirculation by-pass

— measured pump total head: 46 m (150 ft)

— P_e:78 kW

— motor efficiency: 94 %

— 6 132 h (70 %) annual operation

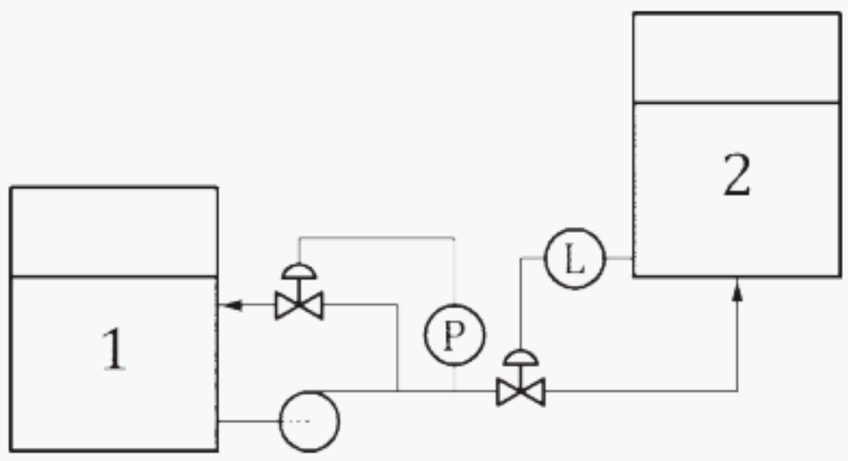

Key

1	tank A
2	tank B
P	pressure control
L	level control

Figure B.3 — Example of simplified flow diagram

This example consists of the following steps:

a) to determine annual power consumption and annual operating cost.

Figure B.4 illustrates the curve of the pump.

© ISO/ASME 2015 – All rights reserved
ASME International
Provided by IHS under license with ASME
No reproduction or networking permitted without license from IHS
Licensee=Chongqing Institute of quality and Standardization 5990390
Not for Resale, 2015/7/22 06:49:48

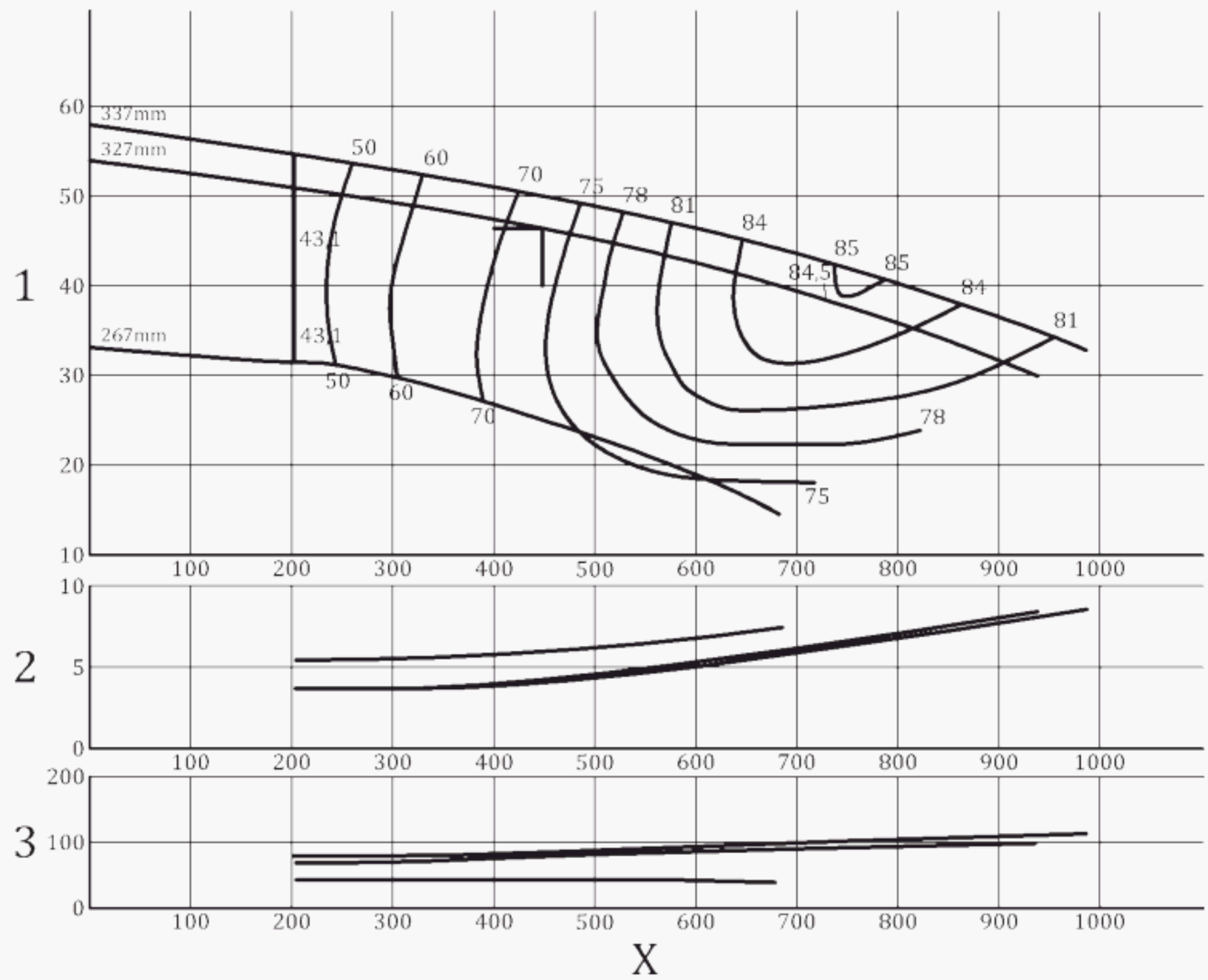

Key

1 head, expressed in meters

2 NPSH3, expressed in meters

3 power, expressed in kilowatts

X flow rate, expressed in cubic meters per hour

Figure B.4 — Example of pump operating curve (as found flow rate of 450 m3/h)

The power consumption, calculated using Formula (B.2), is 82,9 kW.

The pumped system runs 6 132 h/y (0,7 × 8 760 h/y).

The annual operating cost, *AOC*, is calculated as follows:

$$AOC = 82{,}9\,\text{kW} \times 6\,132\,\frac{h}{y} \times 0{,}10\,\frac{\$}{\text{kWh}} = 50\,830\,\frac{\$}{y} \tag{B.3}$$

b) to determine present system demand

The result of data provided shows that:

— present system demand is 340 m^3/h;

— bypass flow of 110 m^3/h can be eliminated to save energy.

c) to determine current annual power consumption and annual operating cost without component replacement

Eliminating the bypass flow results in:

— flowrate: 340 m^3/h;

— head: 48,7 m;

© ISO/ASME 2015 – All rights reserved
ASME International
Provided by IHS under license with ASME
No reproduction or networking permitted without license from IHS
Licensee=Chongqing Institute of quality and Standardization 5990390
Not for Resale, 2015/7/22 06:49:48

— efficiency of 62 %.

The power consumption, calculated using Formula (B.2) is 77,3 kW. The annual operating cost is $47 400.

Pump Modifications

Further savings can be achieved by acting on the following additional data collected after the first analysis:

— control valve differential pressure can be reduced from 1,75 bar down to 1 bar;

— impeller trimming from 327 mm to 282 mm reduces the head to 41,3 m at 340 m^3/h with an efficiency of 65 %.

The resulting power consumption P_e, calculated using Formula (B.2), is 63,5 kW. The annual operating cost is $ 38 930.

d) to determine annual power consumption and annual operating cost of the system considering component replacement

Installing variable speed drive to existing pump results in:

— 1,580 r/min for 340 m^3/h;

— head: 37,9 m;

— pump efficiency of 66 %.

The resulting power consumption P_e, calculated using Formula (B-2) is 59,5 kW.

The annual operating cost is $36 490.

Purchase new pump for current demand:

— flowrate: 340 m^3/h;

— head: 41,9 m;

— pump efficiency of 84 %;

— motor efficiency of 94 %.

The resulting power consumption P_e, calculated using Formula (B.2) is 49 1 kW. The annual operating cost is $ 30 110.

Table B.1 gives the summary of the calculated energy reduction.

Table B.1 — Summary of the results

Condition[a]	Flow m^3/h	Head m	Pump efficiency %	Power consumption kW/h	Operating cost $
As found	450	46,5	73	82,9	50 830
Eliminate by-pass	340	48,7	62	77,3	47 400
Trim impeller	340	41,3	65	63,5	38 940
Add variable frequency drive [b]	340	37,9	66	59,5	36 490
New pump	340	41,9	84	49,1	30 110

[a] All examples use the following system conditions: 20°C water, motor efficiency 94 %, power cost $0,10/kWh, 6,132 h/year operation

[b] The efficiency of the variable frequency drive is 95 %, as specified by the manufacturer.

© ISO/ASME 2015 – All rights reserved
ASME International
Provided by IHS under license with ASME
No reproduction or networking permitted without license from IHS
Licensee=Chongqing Institute of quality and standardization 5990390
Not for Resale, 2015/7/22 06:49:48

B.4.3 Secondary systems: sealing systems

Sealing systems can be another cause of excessive energy consumption. The excess energy related to the use of inappropriate seals or seal support systems, may consume large amounts of energy and other utilities. Further inspection by a specialist is recommended, see Example.

Further inspection by a specialist is recommended, see Example.

During operation the sealing assembly (mechanical seal and seal support system) contributes to the total energy consumption of the pump-sealing assembly mainly due to the friction and viscous shear of the fluid in the seal chamber (also known as frictional losses), and the energy consumption of the seal support system which is implemented in order to maintain an acceptable environment in the seal chamber. In certain applications the energy consumption level of the support system can be equal to or even greater than that of the pump drive.

Table B.2 provides an example of qualitative assessment of the energy impact of different commonly used seal piping plans (see API 682).

--`,,`,,`,`,,`,,`,,,,,,,,,,`,,`,`,-`-`,,`,,`,`,,`---

ASME International
Provided by IHS under license with ASME
No reproduction or networking permitted without license from IHS

© ISO/ASME 2015 – All rights reserved

Licensee=Chongqing Institute of quality and Standardization 5990390
Not for Resale, 2015/7/22 06:49:48

Table B.2 — Example of energy impact based on API 682 seal piping plans

Basic seal arrangement	API Plan	Description	Efficiency losses			Comments
			Thermal[a]	Electrical[b]	Water[c]	
Single mechanical seals and the inboard seal of dual unpressurized seals	01	Internal recirculation from discharge to seal	0	2	0	
	02	Dead end, no recirculation	0	1	0	Thermal energy losses may occur and water may be consumed if the seal chamber is designed with cooling or heating jacket.
	11	External recirculation from discharge to seal	0	2	0	
	13	External recirculation from seal to suction	0	2	0	
	14	External recirculation from discharge to seal to suction	0	2	0	
	21	External recirculation from discharge through a cooler to seal	3	2	1	May consume a high amount of thermal energy when cooling the process medium is required
	23	Internal recirculation from seal to cooler and back to seal	2	1	1	Is the most effective when cooling of the process medium is required.
	31	External recirculation from discharge through cyclone separator to the seal	0	2	0	
	32	Flush fluid is injected to the seal from external source	3	1	3	May consume the highest amount of thermal energy to replace the process fluid heat lost by injecting the cooler external fluid. If plan 32 used in cold application, the then no thermal impact
	41	Recirculation from discharge through cyclone separator and cooler to the seal	3	2	1	May consume a high amount of thermal energy when cooling the process medium is required
	62	External atmospheric quench	1	1	1	If seam is used as a quench fluid, the thermal loss may be significant if not controlled

[a] Thermal losses refer to cooling of the flush or barrier fluid, lost and recovery process heat and energy required to separate diluents.

[b] Electrical losses refer to additional electrical power absorbed by the seal face (value of 1) and flow loss of the pump due to recirculation (value of 1).

[c] Water losses refer to the water consumption to operate the piping plan. Air cooling may be used to avoid cooling water usage.

0 no impact on efficiency

1 minor impact on efficiency

2 moderate impact on efficiency

3 major impact on efficiency

© ISO/ASME 2015 – All rights reserved
ASME International
Provided by IHS under license with ASME
No reproduction or networking permitted without license from IHS
Licensee=Chongqing Institute of quality and Standardization 5990390
Not for Resale, 2015/7/22 06:49:48

Table B.2 *(continued)*

Basic seal arrangement	API Plan	Description	Efficiency losses			Comments
			Thermal[a]	Electrical[b]	Water[c]	
Dual pressurized mechanical seals	53	Pressurized external barrier fluid reservoir supplies clean fluid to the seal	1	1	1	May consume a low thermal energy when the temperature of the process medium is higher than the temperature of the barrier fluid
	54	External barrier fluid system supplies clean fluid to the seal at pressure higher than seal chamber pressure	2	2	2	
	74	Externally supplied barrier gas to seal at pressure higher than seal chamber pressure	0	0	0	Electrical energy consumed in the processing of the nitrogen barrier gas is considered negligible
Dual unpressurized mechanical seals	52	Unpressurized external buffer fluid reservoir supplies clean fluid to the seal	1	1	1	May consume a low thermal energy when the temperature of the process medium is higher than the temperature of the barrier fluid
	72/ 75/ 76	Externally supplied gas buffer for arrangement 2 seals. Buffer gas pressure is lower than the process side pressure of the seal	0	0	0	Electrical energy consumed in the processing of the nitrogen barrier gas is considered negligible

[a] Thermal losses refer to cooling of the flush or barrier fluid, lost and recovery process heat and energy required to separate diluents.

[b] Electrical losses refer to additional electrical power absorbed by the seal face (value of 1) and flow loss of the pump due to recirculation (value of 1).

[c] Water losses refer to the water consumption to operate the piping plan. Air cooling may be used to avoid cooling water usage.

0 no impact on efficiency

1 minor impact on efficiency

2 moderate impact on efficiency

3 major impact on efficiency

For some pump system applications, the selection of the seal support system is a major contributor to the overall pump system energy consumption:

EXAMPLE Water based abrasive slurry. This application involves a single stage end-suction, overhung, foot mounted slurry pump (OH1) which is pumping a water based black liquor slurry in a paper mill at 75 ° C (170 °F). The pump shaft speed is 3600 r/min, the pump shaft diameter is 50 mm (2.00 in.), the seal chamber pressure is 345 kPag (50 psig), and the pump driver would consume 37 kW (50 hp). One common method of sealing the shaft is either packing with a lantern ring, or a single mechanical seal using Plan 32, both with a 1,9 lpm (0,5 gpm) clean water flush at 10 °C (50 °F) is applied. The net energy consumption of these sealing systems is 84 kW (113 hp) primarily due to the need to heat and evaporate the water diluent in a downstream process that was introduced through the flush. An alternative sealing system for this slurry application would be the use of a dual pressurized seal with an API piping plan 54 to circulate a clean barrier fluid through the cavity between the inboard and outboard seals. This seal and system approach reduces the sealing system energy consumption to 3,9 kW (5.2 hp) which results in an energy savings of 80,1 kW (117,8 hp). Even if a switch to a dual pressurized seal were not practical, a reduction in flush flow rate through the use of a close clearance bushing or a different placement of the lantern ring for the packing arrangement can easily cut the required flow rate down to 0,4 lpm (0,1 gpm) with a reduction of energy consumption of 67 KW (90 hp).

ASME International
Provided by IHS under license with ASME
No reproduction or networking permitted without license from IHS
© ISO/ASME 2015 – All rights reserved
Licensee=Chongqing Institute of quality and Standardization 5990390
Not for Resale, 2015/7/22 06:49:48

B.5 Explanation of basic energy reduction opportunity calculations for positive displacement pumps

B.5.1 General

Positive displacement (PD) pumps have very different characteristics than rotodynamic pumps and in many applications low energy consumption has been a primary driver of their initial selection. Due to the differences in PD pump characteristics, the recommended control logic is different from that used with rotodynamic pumps.

Closely matching the positive displacement pump performance, the process requirement approaches the optimal energy consumption.

When evaluating systems, the following is valid for PD pumps:

— PD pumps at constant speed are constant flow devices;

— flow varies with viscosity and pressure changes due to "slip" which is fluid internally returned from high pressure to low pressure region of the pump (suction). Slip flow is minor and can be ignored in system energy evaluations;

— flow variation with pressure change is much less than for rotodynamic pumps;

— rules for positive displacement pumps are:

  — flow rate varies directly with speed,

  — power requirement varies directly with speed,

  — pressure differential is determined by the system hydraulics,

  — both flow and power increase with a viscosity increase,

— PD pumps generate pressure to meet system requirements, dead heading and discharge throttling should not be practiced. Safety requires a pressure relief device in downstream of the pump but this should not be an energy issue unless the unit is improperly sized and is recirculating through the relief valve.

— PD pumps are not head producing devices and are rated and calculated directly based on pressure differential and not head.

Head to pressure relation is calculated using Formula (B.4):

$$P = H\rho g \times 10^{-5} \text{ (SI) or } P = \frac{H\rho g}{2{,}31} \text{ (US)} \tag{B.4}$$

where

P is the pressure expressed in bar (bar) or pound per square inch (psi)

H is the head expressed in meters (m) or feet (ft)

ρ is the density expressed in kilogram per cubic meter (kg/m^3) or pound per cubic foot (lb/ft^3)

g is equal to 9,81 m/s^2 or 32,2 ft/s^2

© ISO/ASME 2015 – All rights reserved
ASME International
Provided by IHS under license with ASME
No reproduction or networking permitted without license from IHS
Licensee=Chongqing Institute of quality and Standardization 5990390
Not for Resale, 2015/7/22 06:49:48

The hydraulic power imparted to the liquid by the pump is calculated using Formula (B.5):

$$P_w = \frac{Q\Delta p}{36} \text{ (SI) or } P_w = \frac{Q\Delta p}{1714} \text{ (US)} \quad \text{(B.5)}$$

where

P_w is the hydraulic power supplied by the pump expressed in kilowatts (kW) or horsepower (hp);

Δ_p is the difference of pressure expressed in bar (bar) or pound per square inch (psi);

Q is the flow expressed in cubic meters per hour (m^3/h) or gallon per minute (gpm);

The electrical power required to support the pumping system operation is calculated using Formula (B.6):

$$P_e = \frac{P_w + P_I}{\eta_M \eta_D} \quad \text{(B.6)}$$

where

P_e is the electrical power input expressed in kilowatts (kW) or horsepower (hp);

P_I is the internal power losses which are mechanical and viscous, expressed in kilowatts (kw) or horsepower (hp);

η_M is the motor efficiency when supplying the power required by the pump at flow rate Q;

η_D is the drive (belt, adjustable speed, gear, etc.) efficiency;

Pump internal power losses are those from mechanical friction, internal recirculation and the viscous losses from the drag effect on parts in the liquid flow path. An estimation of these values can be obtained from the pump manufacturers.

Driver size is based on maximum viscosity and pressure differential.

PD pumping systems are deemed to be operating at the optimal performance level when the system functional requirements are met with:

— minimum demand flow rate,

— minimum demand differential pressure,

— minimum run time,

— maximum component efficiencies.

The optimal hydraulic power added to the system is the value calculated with the above conditions inserted into Formula B.12 and the optimal electrical power is calculated (Formula B.13) using the optimal hydraulic power and the best available pump, motor and drive efficiencies.

As prescribed in this International Standard, the assessment should establish a baseline of total annual energy consumption for the pumping system(s) assessed.

B.5.2 Example

B.5.2.1 Existing conditions (see Table B.3):

A system transfers liquid from tank A to tank B (see Figure B.5).

All flow goes to tank B.

ASME International
Provided by IHS under license with ASME
No reproduction or networking permitted without license from IHS

© ISO/ASME 2015 – All rights reserved

Licensee=Chongqing Institute of quality and Standardization 5990390
Not for Resale, 2015/7/22 06:49:48

Tank B is always full and excess flow returns to tank A.

B.5.2.2 Improved conditions (see Table B.3):

A recirculation line is installed to maintain the constant flowrate and to supply demand flow.

Energy is saved since less liquid is forced through the feed line to tank B, thus lowering friction losses

No discharge throttling can be used. The pump is directly driven by a motor (without gear, belt, or variable speed drive).

B.5.2.3 Main features of operating conditions are:

— the system liquid has a specific gravity of 0,85 and the facility average electric cost rate is $ 0,05/kWh,

— the liquid is turbine lube oil with viscosity of 90 cSt (420 SSU) at 40°C (104 °F),

— measured pump flow rate: 450 m^3/h (2000 gpm),

— optimal flow rate: 340 m^3/hour (1 500 gpm) going to tank B. 110 m^3/h (484 gpm) is over-flowing or pumped through the by-pass line directly back to tank A

— measured pump outlet pressure: 4 bar (60psi),

— optimal pump outlet pressure at the reduced flow (optimal flowrate) to tank B (total pump flow being the same): 2,7 bar (40 psi),

— measured electric power: 73,4 kW

The system operates at the above conditions 70 % of the time.

NOTE This example, while similar to the rotodynamic example, uses a liquid that is considerably more viscous, so results cannot be compared and are useful only to illustrate the concepts presented.

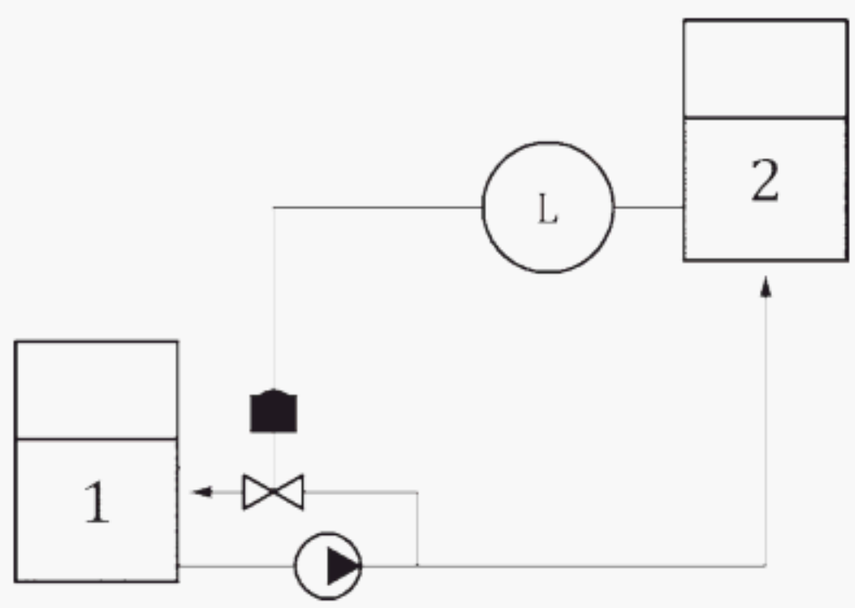

Key

1 tank A
2 tank B
L level control

Figure B.5 — Simplified Flow Diagram for Table B.3

Table B.3 gives the results of first analysis.

© ISO/ASME 2015 – All rights reserved
ASME International
Provided by IHS under license with ASME
No reproduction or networking permitted without license from IHS
Licensee=Chongqing Institute of quality and Standardization 5990390
Not for Resale, 2015/7/22 06:49:48

Table B.3 — Actual existing (oversized) vs. proposed improved system flow results

Condition	Flowrate m^3/h (gpm)	Outlet pressure bar (psi)	Pump power input kW	Motor efficiency %	Electrical power input kW	Annual energy MWh	Annual energy cost $1,000
Existing system	450 (2 000)	4,0 (58)	73,4	94	78	478,9	23,9
Improved system	450 (2000) whereof 340 m^3/h to tank B	2,7 (40)	55,7	94	59	363,3	18,2
Potential savings	—	1,3 (19)	—	—	—	—	5,7
Ratio of optimal power/measured power					0,76	—	—

NOTE Pump operating at same speed and flow but delivered flow to tank B is reduced to 340 m^3/h (1500 gpm), due to the by-passing. The pressure is reduced from 4 bar (58 psi) to 2,7 bar (40 psi) due to the lower pressure drop in the recirculation valve controlled loop

B.5.2.4 Optimised conditions (see Table B.4):

Add variable frequency drive to control flow to meet demand.

Close by-pass line.

Transitioning to a VSD allows the tank B level controller to set the speed of the tank A pump to match the process demand and to save the energy consumed by the recirculation control loop as well as minimising the system losses between the tanks (see Figure B.6).

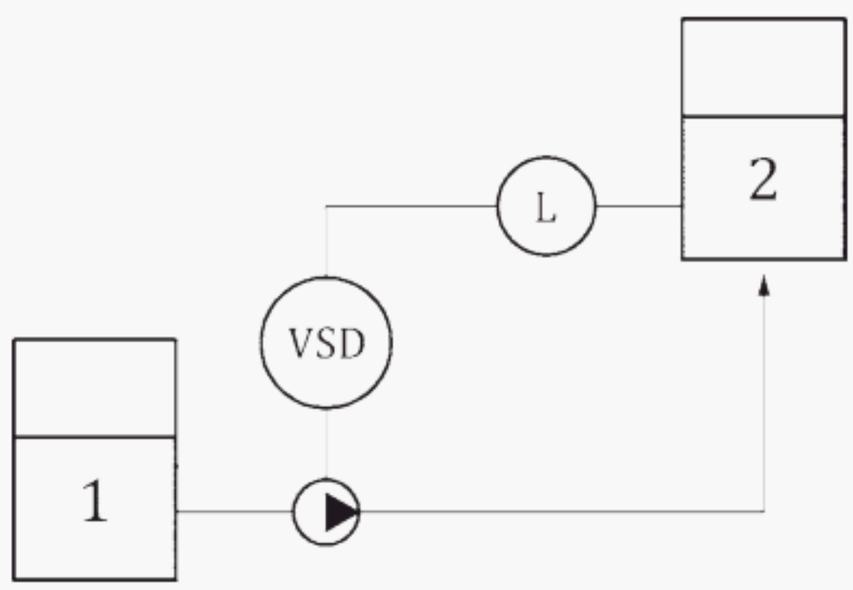

Key

1	tank A
2	tank B
L	level control
VSD	variable frequency drive

Figure B.6 — Simplified flow diagram for Table B.4

Table B.4 gives the results of second analysis:

--`,,`,,`,`,,`,,``,,`,,`,`,,`,,`,

Table B.4 — Optimal system flow results vs. flow matched to system without recirculation control

Condition	Flowrate m^3/h (gpm)	Operating speed r/min	Pump power input kW	Motor efficiency %	Variable frequency drive efficiency	Electric power kW	Annual energy MWh	Annual energy cost $1000
Improved system: 2,7 bar (40 psi)	450 (2000) whereof 340 (1500) to tank B	1200	55,7	94	–	59	363,3	18,2
Optimised system reduced speed/flow/ pressure: 2,7 bar (40 psi)	340 (1500)	925	39,4	92	96	44,6	273,5	13,7
Potential savings: existing vs improved	–	–	16,3 22 %	–	–	–	115,6	Savings relative existing: 5,7
Potential savings: optimal vs existing	-	-	34 46 %	-	-	-	205,4	Savings relative existing: 10,2

Beyond these special considerations the methods used in B.4 can be considered.

© ISO/ASME 2015 – All rights reserved
ASME International
Provided by IHS under license with ASME
No reproduction or networking permitted without license from IHS
Licensee=Chongqing Institute of quality and Standardization 5990390
Not for Resale, 2015/7/22 06:49:48

Annex C
(informative)

Expertise, experience and competencies

C.1 Systems

This section identifies the areas of expertise/experience relevant to be mastered by the assessor(s) in respect of the system and the liquid pumped.

— Pump system energy basics:

  — Assessors should be familiar with pumping systems which can include a wide variety of facility and equipment including process units, tanks and pressure vessels. The type and number of pumps and drives installed will also vary according to the system being assessed.

  — Assessors should be familiar with pumps, drives, control valves, process components and be able to determine the factors for each system component that contribute to the energy consumption of the system.

— System performance characteristics:

  — Assessors should be familiar with how the physical properties of the process liquid effect the pumped system including, density, viscosity and vapour pressure and how these physical properties affect the operation of the various components found in a pumping system.

  — Assessors should be familiar with all the different elements of head, such as total head, static head and friction head, and be able to determine each of them for any given system. They should also be able to generate and understand a system curve and be able to understand the operational envelope over time (duration diagram).

  — Assessors should be proficient in determining the friction head losses for all components of the system being assessed using the various methodologies for determining friction head loss.

  — Assessor should be capable of establishing the system demand and profile.

  — Assessors should be capable of optimising velocity within the system considering energy consumption, liquid dynamics and system demand.

  — Assessors should be capable of determining the system characteristics for parallel and series pumping configurations

C.2 Pumps

This section identifies the areas of expertise /experience relevant to be mastered by the assessor/s with regards to the aspects of the pump characteristics and liquid influences relative to the hydraulics of the pump and the effects on the system.

— Liquid energy basics

  — Assessors should be capable of determining the various components of energy, including pressure, geodetic head, flowrate and velocity head, and how they relate to Bernoulli's principle.

ASME International
Provided by IHS under license with ASME
No reproduction or networking permitted without license from IHS
© ISO/ASME 2015 – All rights reserved
Licensee=Chongqing Institute of quality and Standardization 5990390
Not for Resale, 2015/7/22 06:49:48

  - Assessors should have the ability to determine the variance of the liquid properties e.g. density, viscosity temperature etc.

- Pump characteristics:
  - Assessors should understand pump performance characteristics and their interaction with the system. Such characteristics include, head, flow, power, efficiency, NPSHA/R, pump affinity laws and their mathematical relationships.

- System characteristics and impact on pump behaviour:
  - Assessors should be capable of determining such changes that may be required to optimize the type of pump and selection for the system in question.
  - Assessors should understand the performance characteristics of parallel and series pumping applications and their interaction with the respective systems, at nominal speed or variable speed.

- Data gathering
  - Assessors should be capable of undertaking (after identifying the system boundaries) a review of the pumping systems prior to the physical measurement to establish the priority and the measurement requirements
  - Assessors should be capable of undertaking accurate and repeatable direct or indirect measurements of the pump parameters, driver (electric or otherwise) and system operational characteristics.

C.3 Motors and drives

This subclause defines the areas of expertise and knowledge relevant to be mastered on motor characteristics, power factor corrections, variable speed drives (mechanical and electrical) and their effects on rotodynamic pumps. Assessors should have an understanding of:

- motor performance characteristics including various options for starting including soft starter, star/delta, auto-transformer and via a variable speed drive. The assessor should also be familiar with the torque/speed relationship imposed on the motor by the pump during start up and how to ensure that this is optimised for correct motor selection.
- transmissions such as gear box, belt drives, liquid or magnetic couplings.
- the different types of variable speed drives and their performance and efficiency characteristics.
- the factors involved in matching the pump, system and drive. A knowledge of high and low static head systems and their impact on the speed at which the pump is driven is essential.

C.4 Analysis and reporting

This subclause defines the expertise relevant to be mastered on the analysis of the measured field data to form the basis of a logical and coherent report, with the objective of identifying energy saving opportunities within the pumping system, as described in Annex A.

- Assessors should be experienced in analysing the gathered field data and be capable of understanding the interaction between the various components within a system including the pump(s), process components and control components. These include the performance and system characteristic curves, and also have expertise in the assessment of time based variations and their impact on the system characteristic.
- Assessors should be able to define the performance and system characteristic curves, and the influence of demand variations on systems.

© ISO/ASME 2015 – All rights reserved
ASME International
Provided by IHS under license with ASME
No reproduction or networking permitted without license from IHS
Licensee=Chongqing Institute of quality and Standardization 5990390
Not for Resale, 2015/7/22 06:49:48

— Assessors should have experience and knowledge of the various components found in a system in order to determine their impact on the system efficiency.

— Assessors should be able to analyse the energy implications of system control philosophy.

ASME International
Provided by IHS under license with ASME
No reproduction or networking permitted without license from IHS
© ISO/ASME 2015 – All rights reserved
Licensee=Chongqing Institute of quality and Standardization 5990390
Not for Resale, 2015/7/22 06:49:48

Annex D
(informative)

Recommended guidelines for analysis software

The main objective of the system assessment methodology is to identify the actual system demand, compare it with the current process data and identify where energy savings can be made.

The software should have generic pump and motor algorithms within its database to compare the specific data to best available data.

The methodology to analyse a system should be documented identifying the source of data and the formulas and methods used to arrive at the conclusions.

The methodology employed regardless of means (hand calculations, spread sheet, or computer software) should factor the following:

a) The analysis software should be transparent in identifying the source of data within the embedded algorithms:

- Process data:
  - Liquid properties: liquid name, temperature, density (specific gravity), viscosity, calculated NPSHA/R
  - Static head: liquid level in source and destination, pressure on liquid surface source and destination
  - Process element(s): manufacturer, identification, designed differential pressure, operational differential pressure, flowrate.
- Nameplate data:
  - Pump: manufacturer's description (type, size, number of stages), pump curve, rotational speed, fixed or variable speed.
  - Motor: manufacturer, NEMA/IEC frame size, power, number of phases, frequency, speed, voltage, full load apps, power factor, NEMA/ISO nominal efficiency or efficiency class, guaranteed efficiency.
  - VSD: manufacturer, efficiency.
  - Control valve element: manufacturer, valve model, size, characterization, pressure rating, direction of flow, control valve data supplied by manufacturer.
- Operating data:
  - Pump: suction pressure, discharge pressure, flow rate, nominal speed (r/min), and efficiency from pump curve.
  - Motor: power consumption, line voltage, line current, power factor and efficiency under operating load.
  - VSD: efficiency at load conditions.
  - Control valve element: valve position, differential pressure.

b) Determination the actual energy consumption of the various elements based on current operating system conditions

© ISO/ASME 2015 – All rights reserved
ASME International
Provided by IHS under license with ASME
No reproduction or networking permitted without license from IHS
Licensee=Chongqing Institute of quality and Standardization 5990390
Not for Resale, 2015/7/22 06:49:48

c) Determination the optimum system operating conditions along with the corresponding energy consumption.

d) Cross validation the results to determine the energy into the system and energy consumed by the system is equal.

e) Identification of potential energy savings determined from the collated data and quantified by using unit costs of energy.

ASME International
Provided by IHS under license with ASME
No reproduction or networking permitted without license from IHS
© ISO/ASME 2015 – All rights reserved
Licensee=Chongqing Institute of quality and Standardization 5990390
Not for Resale, 2015/7/22 06:49:48

Annex E
(informative)

Example of prescreening worksheet

Table E.1 gives a typical example of typical prescreening worksheet.

Table E.1 — Typical example of prescreening worksheet

Equipment information						Control schemes (check if all applies)						Operating parameters (provide if readily available, otherwise indicate with check if it is acquirable							Other symptoms		Additional information (is acquirable?)			
System data	Pump type (MC, PD, Vacuum, centrifugal)	Pump performance curve	Pump ID/process area	Motor name plate data	Voltage	Variable speed drive	Throttled (% open if available)	By-pass/recirculation	On/Off	More than one pump/split duty	Not controlled (pumps just run)	Operating hours or % of time equipment operates	Power or curent	Flow requirements have changed or are expected to change	Design flowrate	Operational flowrate	Design head	Operational head	NPSHA pump or in system	System maintenance level (Hi/Med/Lo)	Typical flowrates and variation thereof	Low profile	Records	PID/DCS screen-shot

ASME International
Provided by IHS under license with ASME
No reproduction or networking permitted without license from IHS

Licensee=Chongqing Institute of quality and Standardization 5990390
Not for Resale, 2015/7/22 06:49:48

© ISO/ASME 2015 – All rights reserved

Annex F
(informative)

Specific Energy

F.1 General

A pump system is built to move a certain volume of liquid from one point to another (in circulating systems these points are the same). A useful measure for calculating the cost of pumping is the specific energy consumption, E_S, which is defined as the energy consumed to move a certain volume through the system and has the advantage of being a direct measurement of the cost of pumping once you know the cost of energy.

Specific energy is also a useful measure for comparing different system solutions.

In a constant flow system, the specific energy E_S is calculated by using the formula (F1).

$$E_S = \frac{P_e \cdot t}{V} = \frac{P_e}{Q} \tag{F.1}$$

Where

t is the time;

P_e is the input power to driver.

In a system with varying flowrates, E_S is a function of flowrate (Q), therefore this dependence is differently evaluated.

E_S is calculated from pump, motor and drive data for different loads and speeds provided by the manufacturers.

When $E_S = f(Q)$ has been calculated, this information is combined with the system load data to obtain the operating cost. System designs can be compared based on number of pumps as well as different methods of regulation.

F.2 Specific energy in different type of pump systems

The head needed from the pump can be separated into static head, H_S, and dynamic friction loss head, H_f. Substituting $H_S + H_f$. for the total head and adding a drive efficiency for speed controlled systems generates the following equation for input power:

$$P_e = \frac{Q \cdot (H_S + H_f) \cdot \rho \cdot g}{\eta_{drive} \cdot \eta_{motor} \cdot \eta_{pump}} \tag{F.2}$$

In a system without static head or closed loop systems, H_S is equal to zero.

The specific energy is here dependent on the frictional head loss which, in turn, is determined by the losses in the pipe system (including throttling valves), and by the combined drive - motor - pump efficiency.

The combined drive - motor - pump efficiency is evaluated for each duty point. It is noted that the pump efficiency remains approximately the same in a system of this type when the speed is changed, whereas the drive-motor efficiency can drop considerably as the load is reduced.

© ISO/ASME 2015 – All rights reserved

ASME International
Provided by IHS under license with ASME
No reproduction or networking permitted without license from IHS
Licensee=Chongqing Institute of quality and Standardization 5990390
Not for Resale, 2015/7/22 06:49:48

If, the system curve is changed by changing the setting of a valve, this changes the duty point of the pump and, hence, its efficiency.

In a system with static head, the specific energy is derived as follows.

$$E_S = \frac{P_{in}}{Q} = \frac{(H_S + H_f)\cdot\rho\cdot g}{\eta_{drive}\cdot\eta_{motor}\cdot\eta_{pump}} = \frac{H_S\cdot\rho\cdot g}{f_{HS}\cdot\eta_{drive}\cdot\eta_{motor}\cdot\eta_{pump}} \quad \text{(F.3)}$$

where

$$f_{HS} = \frac{H_S}{H_S + H_f} \quad \text{(F.4)}$$

The hydraulic system factor, f_{HS}, indicates the relative amount of static head in the system.

E_S has a minimum value: $H_S\cdot\rho\cdot g$ which occurs if all efficiencies are equal to 100 % and there are no friction losses. If there is no variable drive in the system, then ... The factors in the denominator are all functions of the flowrate and vary with the duty point. If a variable speed drive is used the duty point moves along the system curve.

The efficiency of a high efficiency motor is fairly constant down to about 30 % load. However, the drop in combined motor-drive efficiency can be substantial if the motor load drops below 75 % of full speed. The denominator: can also be seen as the overall efficiency.

The hydraulic system factor f_{HS} approaches 1 when the friction losses approach 0.

The specific energy increases significantly as the duty point moves towards shut off head in systems with static head due to reduced pump, motor and drive efficiencies.

In systems with high static head, specific energy increases at a relatively moderate decrease in pump speed. In such systems, the area of usefulness of a variable speed drive can be improved by making sure that the system curve and full speed pump curve intersected to the right of the pumps best efficiency point.

To calculate the cost of pumping, the specific energy is calculated along the system curve, or for a number of flow rates. Combining this information with the information in the system load profile the cost of pumping can be determined.

Figure F.1 shows the specific energy as a function of pump speed for three different system curves depending on systems with and without static head when a variable speed drive is used.

The saving potential is very large at low static heads and the reverse in high static head situations. When the speed is low enough to cause the pump to operate at, or close to, shut-off head, the specific energy goes towards infinity.

© ISO/ASME 2015 – All rights reserved
ASME International
Provided by IHS under license with ASME
No reproduction or networking permitted without license from IHS
Licensee=Chongqing Institute of quality and Standardization 5990390
Not for Resale, 2015/7/22 06:49:48

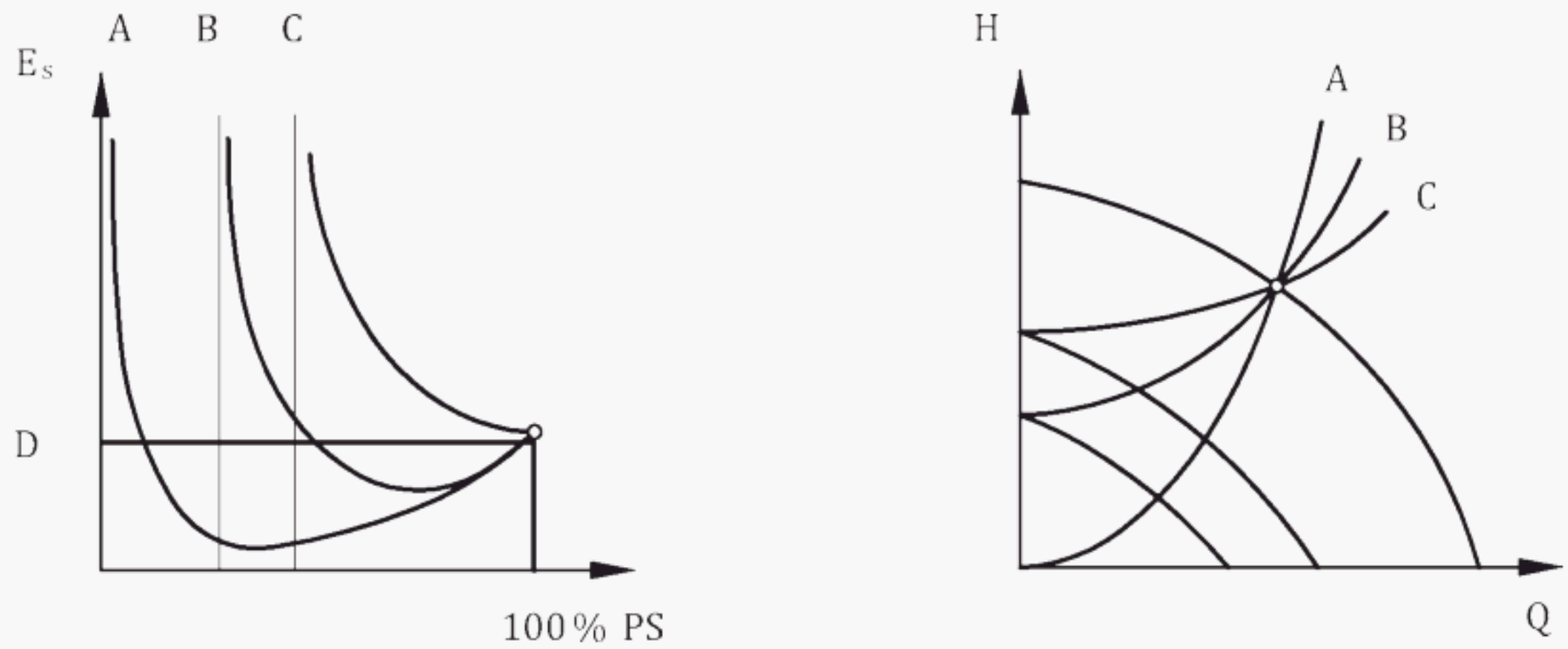

a) Specific energy as a function of pump speed **b) corresponding system curves**

Key

A	no static head, friction only
B	moderate static head
C	high static head
D	on-off regulated system (for reference)
PS	Pump speed

Figure F.1 — Specific energy as a function of pump speed for different system curves

When the pump is throttled, the duty point moves to the left on the pump curve, see Figure F.2.

The vertical lines, in Figure F.2, represent the valve throttling loss.

The specific energy is calculated for each operating point by dividing the input power to the motor by the flowrate. E_s increases rapidly as the flow is reduced – see dashed curve in Figure F.3.

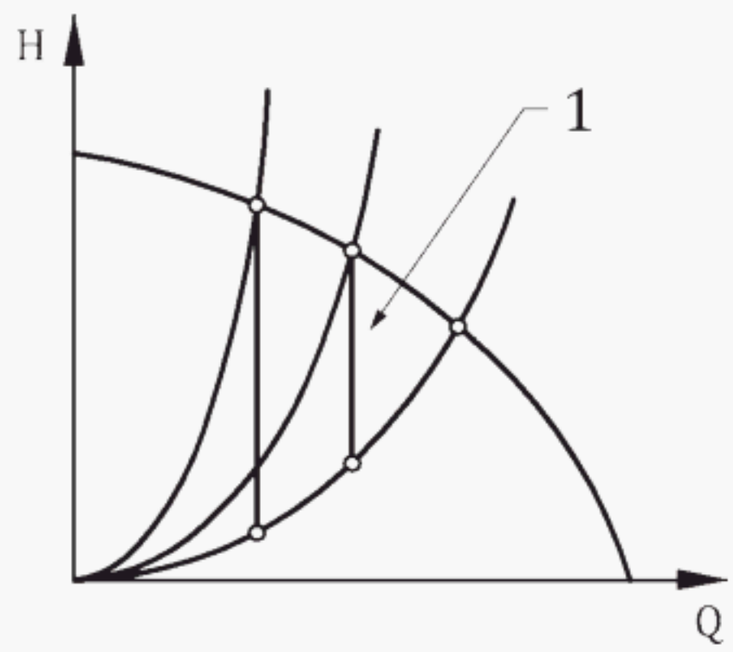

Key

1 pressure drop as a result of valve throttling

Figure F.2 — Example of flowrate with a throttled valve

In a throttled system, the specific energy follows a curve similar to the dashed curve in Figure F.3. The specific energy for a speed regulated pump system can be higher than that for an on-off regulated system with static head, but is lower and saves energy compared to a throttled system.

© ISO/ASME 2015 – All rights reserved

ASME International
Provided by IHS under license with ASME
No reproduction or networking permitted without license from IHS
Licensee=Chongqing Institute of quality and Standardization 5990390
Not for Resale, 2015/7/22 06:49:48

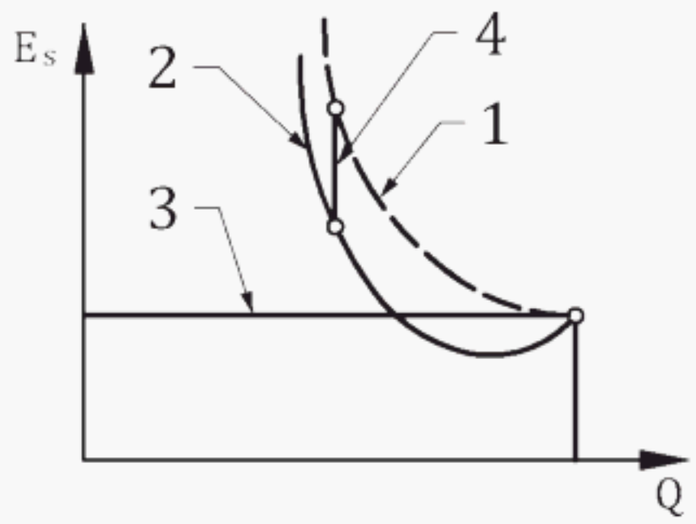

Key

1 throttled system

2 speed regulated system with some static head

3 on-off regulation

NOTE Variable speed drives save on energy.

Figure F.3 — Comparison of regulation by throttling

© ISO/ASME 2015 – All rights reserved
ASME International
Provided by IHS under license with ASME
No reproduction or networking permitted without license from IHS
Licensee=Chongqing Institute of quality and Standardization 5990390
Not for Resale, 2015/7/22 06:49:48

Annex G
(informative)

Pumping system parasitic power

G.1 General

Parasitic power may be used as an indicator to identify inefficient (and unreliable) pumping systems, and support pump and control method selection, in order to ensure high efficiency, reliability and equipment life expectancy along the entire operating range.

G.2 Parasitic power equations

$$P_w = \frac{\rho \cdot Q \cdot g \cdot (H_s + H_f)}{3{,}6 \times 106} \text{ (SI) or } \quad P_w = \frac{d \cdot Q \cdot (H_s + H_f)}{3960} \text{ (US)} \tag{G.1}$$

where

P_w is the hydraulic power expressed in kW or hp;

d is the specific gravity (dimensionless);

ρ is the density expressed in kilograms per cubic meter (kg/m^3) or pound per cubic foot (lbm/ft^3);

Q is the flowrate expressed in cubic meter per hour (m3/h) or gallon per minute (gpm);

g is a constant equal to 9,81m/s^2 or 32,2 (ft/s^2);

H_s is the static head expressed in meter (m) or foot (ft);

H_f is the friction head expressed in meter (m) or foot (ft);

The total power absorbed in the shaft of the pump P_a, expressed in kilowatt (kW), is calculated using formula (G.2)

$$P_a = \frac{P_w}{\eta_p} \tag{G.2}$$

$$P_w = \eta_p \cdot P_a$$

Parasitic power definitions:

$$P_p = (1 - \eta_p) \cdot P_a \tag{G.3}$$

Where

η_p is the pump efficiency;

P_p is the parasitic power in kW or hp;

P_a is the total power absorbed in the shaft of the pump in kW;

© ISO/ASME 2015 – All rights reserved

ASME International
Provided by IHS under license with ASME
No reproduction or networking permitted without license from IHS
Licensee=Chongqing Institute of quality and Standardization 5990390
Not for Resale, 2015/7/22 06:49:48

Another way to express (G3) is:

$$P_a = P_w + P_p \tag{G.4}$$

G.3 Conclusions

G.3.1 From formula (G.4): the lower the required shaft power (P_a) to achieve a certain condition (hydraulic power - P_w), the lower the parasitic power resulting in higher pump system life expectancy and reduced energy consumption.

G.3.2 From Formula (G.1): for a given condition, the higher the pump efficiency, the lower the parasitic power resulting in higher pump system life expectancy and reduced energy consumption.

G.3.3 The lower the friction head (H_f) in the system, to be overcome by the pump to achieve a given condition (hydraulic power - P_w), the lower the parasitic power resulting in higher pump system life expectancy and reduced energy consumption.

NOTE $P_a = P_w / \eta_p = Q \cdot (H_s + H_f) \cdot \rho \cdot g / \eta_p$ That means that the control valve position plays an important role on destructive power.

Conclusions G.3.1 to G.3.3 are three guidelines to be considered when evaluating pumping system efficiency and reliability.

G.4 Relationship between parasitic power and vibration level

Figure G.1 shows several vibration levels measured in a kerosene exportation pump, under different parasitic power levels, calculated for each condition according to Formula (G.1).

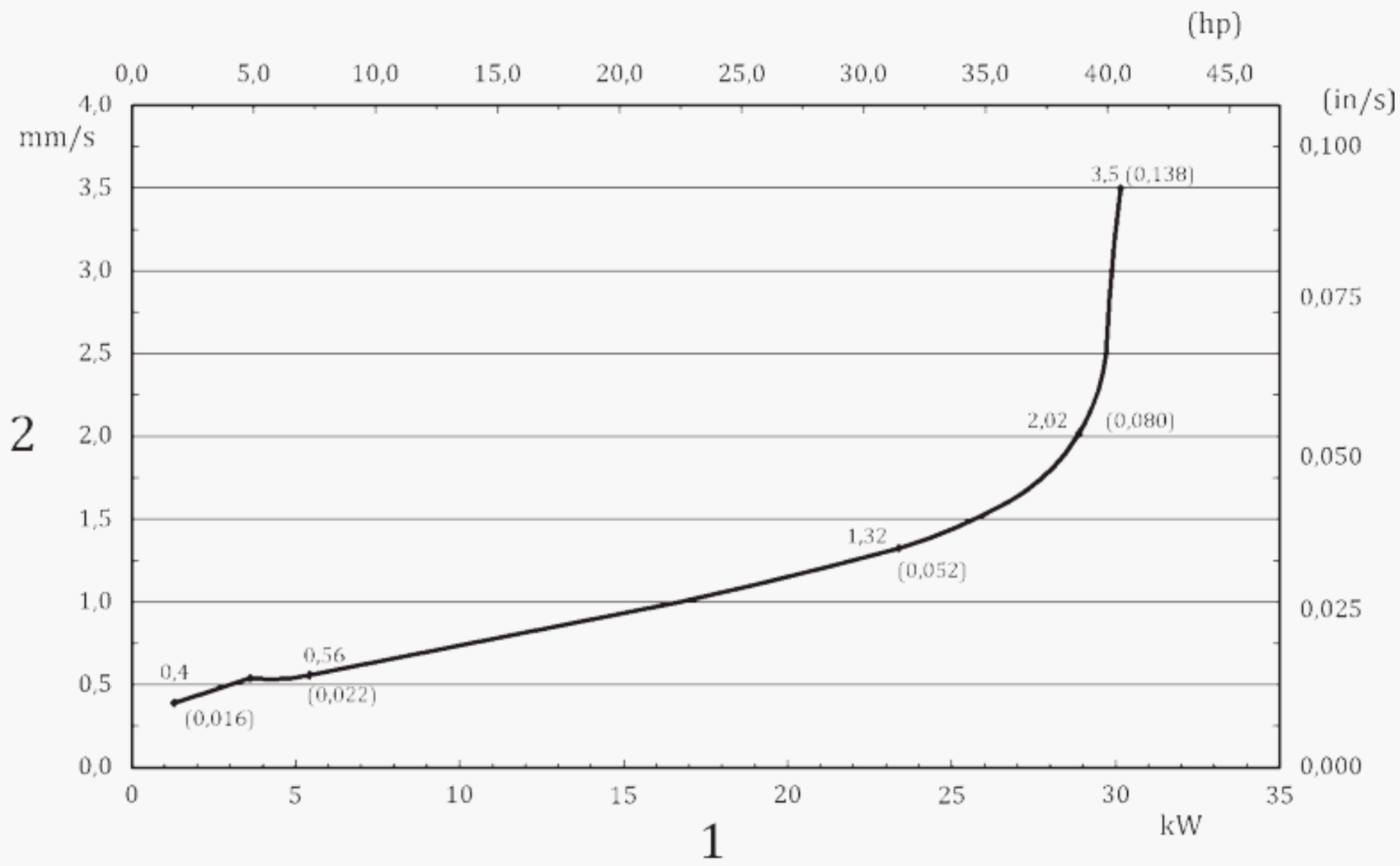

Key

1 parasitic power

2 vibration level

Figure G.1 — Example of parasitic power and vibration level curve using variable speed control in a low static head system

© ISO/ASME 2015 – All rights reserved
ASME International
Provided by IHS under license with ASME
No reproduction or networking permitted without license from IHS
Licensee=Chongqing Institute of quality and standardization 5990390
Not for Resale, 2015/7/22 06:49:48

The vibration increases with parasitic power. At low parasitic power levels, vibration increases slowly. Above a certain threshold, vibration level assumes an asymptotic growth. This asymptotic growth may happen either at very low flowrates (recirculation) or at very high flowrates (cavitation).

G.5 Correlation between parasitic power level in a pumping system and MTBF

It is considered a good practice to operate the pump in range of 80 % to 110 % of the best efficiency flow, in order to achieve high efficiency and high MTBF. Usually, the largest parasitic power occurs at the higher limit of this range (110 % of the best efficiency flow). Pump and control system should be selected in a way to ensure permanent pump operation below this threshold.

In most cases this is an easy task when using variable speed control. In cases where VSD application is not recommended, pump selection with the rated point at the right side of the BEP, as far as viable, is a good way to reduce the parasitic power at low flows.

NOTE Parasitic power has the ability to predict the severity of pump system operation (closely related to energy efficiency), along the entire operating range, even before the equipment and control method have been selected.

ASME International
Provided by IHS under license with ASME
No reproduction or networking permitted without license from IHS
© ISO/ASME 2015 – All rights reserved
Licensee=Chongqing Institute of quality and Standardization 5990390
Not for Resale, 2015/7/22 06:49:48

Annex H
(informative)

Example of pumping system efficiency indicator

H.1 General

The pumping system efficiency indicator (PSEI) is approximate and used to give a 'first-pass' indication of the pumping system efficiency.

The PSEI example described in H.2 is applicable to water. Similar indicators can be developed for other liquids.

The PSEI is a number between 0 and 100, indicating how much of the energy supplied to a pumping system is necessary.

For example, if the PSEI is calculated to be 36, then for every 100 units of energy supplied, only 36 units are required. The remaining 64 units are unnecessary.

PSEI can be used for:

— open and closed pumping systems;

— any pump type (centrifugal or positive displacement);

— any number of installed pumps.

PSEI can be calculated from either of the following two sets of data:

— instantaneous data. This gives an energy efficiency indicator at the time of measurement.

— longer-term data. This gives an indication covering all pumping conditions over a period of time.

H.2 PSEI calculation

H.2.1 Table H.1 gives the symbols and units used to calculate PSEI

ASME International
Provided by IHS under license with ASME
No reproduction or networking permitted without license from IHS
--`,,```,,,

Table H.1 — Units of variables and symbols used

Item	Symbol	SI Units	US Units
Pumping system efficiency indicator (PSEI)	Y_n	-	-
Flowrate from source to destination	Q	*l*/s	gpm
Static head (vertical height difference between source and destination)	H_S	m	ft
Distance transferred (shortest horizontal distance from source to destination)	L	m	ft
Specific length	L_1	-	-
Equipment losses	ΔH	m	ft
Input power to station (electrical power used by the pumping system at the time of measurement)	P_e	kW	kW
Volume delivered from source to destination in the defined time period	V	m3	g
Input Energy to Station	E_e	kWh	kWh

H.2.2 Transfer Duties, (a) Instantaneous Data

The Pumping system efficiency indicator Y_1 is calculated using Formula (H.1)

$$Y_1 = K_1 \cdot \frac{Q \cdot (H_S + L / L_1 + \Delta H)}{P_e} \tag{H.1}$$

and

$$L_1 = 43.3 \cdot |Q|^{0.61} \text{ (SI) or } L_1 = 8.15 \cdot |Q|^{0.61} \text{ (US)} \tag{H.2}$$

Where K_1 is equal to 1,25 (SI) or 0,24 (US).

H.2.3 Transfer duties, (b) longer term data

The Pumping system efficiency indicator Y_0 is calculated using Formula (H.3)

$$Y_0 = K_0 \cdot \frac{V \cdot (H_S + L / L_1 + \Delta H)}{E_e} \tag{H.3}$$

Where K_0 is equal to 0,35 (SI) or 3,7 (US).

H.2.4 Closed loop duties. For closed loop applications, select the appropriate formula from (H.1) to (H.3). The value to be used for *L* is the minimum distance around the pumped loop from pump outlet to pump inlet.

H.3 Interpretation of results

If the Indicator is low, this identifies a potential problem within the pumping system such as one or more of the following and further investigation is advised:

— bad match of pump with system demand;

— pump operating well away from best efficiency point;

— high velocities in pipelines;

— poor control;

© ISO/ASME 2015 – All rights reserved

ASME International
Provided by IHS under license with ASME
No reproduction or networking permitted without license from IHS

Licensee=Chongqing Institute of quality and Standardization 5990390
Not for Resale, 2015/7/22 06:49:48

— excessive wear in pump;

— obstructions in pipe work/valves/fittings.

ASME International
Provided by IHS under license with ASME
No reproduction or networking permitted without license from IHS

Licensee=Chongqing Institute of quality and Standardization 5990390
Not for Resale, 2015/7/22 06:49:48

© ISO/ASME 2015 – All rights reserved

Bibliography

[1] ISO 50001, *Energy management systems — Requirements with guidance for use*

[2] ISO 50002, *Energy audits — Requirements with guidance for use*

[3] ISO 50003, *Energy management systems - Requirements for bodies providing audit and certification of energy management systems*

[4] API 682, *Pumps-shaft sealing systems for centrifugal and rotary Pumps, Third Edition*

[5] ANSI/ASHRAE/IES Standard 90.1:2013 - *Energy Standard for Buildings Except Low-Rise Residential Buildings*

[6] ASME EA-2-2009 *Energy assessment for pumping systems*

[7] ASME EA-2G-2010, *Guidance for ASME EA-2, Energy Assessment for Pumping Systems*

[8] BLOCH. H. P. - Improving Machinery Reliability. Gulf Publishing Company, Texas, 1998

[9] CASADA. D. - *Energy and Reliability Considerations for Adjustable Speed Driven Pumps – 1999 IETC Proceedings* – ESL - IE-99/05-09 - Houston, Texas Oak Ridge National Laboratory

[10] EUROPUMP AND HYDRAULIC INSTITUTE. Variable Speed Pumping – A guide to successful applications. Elsevier Ltd, 2004

[11] EUROPUMP AND HYDRAULIC INSTITUTE. Optimizing Pumping Systems – A guide for improved energy, efficiency and profitability. Pump Systems Matter, 2008

[12] MARTINS AND LIMA -. *How to improve reliability in centrifugal pump systems through the automatic tune-up of pumps within their best operational condition,* 2008 – 24th International Pump Users Symposium

[13] MARTINS AND LIMA –. *Improving reliability in a high static head system through VFD application,* 2010 – 26th International Pump Users Symposium

[14] MATTOS. E. E. - FALCO, R. - Bombas Industriais. McKlausen Editora, 1998

[15] STADLER. Hugo, 1998, *Energy Savings by means of Electrical Drives*, Loher Gmbh, Germany

© ISO/ASME 2015 – All rights reserved

ASME International
Provided by IHS under license with ASME
No reproduction or networking permitted without license from IHS

Licensee=Chongqing Institute of quality and Standardization 5990390
Not for Resale, 2015/7/22 06:49:48

ISBN 978-0-7918-7015-0

E1461Q

ICS 23.080

Price based on 61 pages

© ISO/ASME 2015 – All rights reserved

ASME International
Provided by IHS under license with ASME
No reproduction or networking permitted without license from IHS

Licensee=Chongqing Institute of quality and Standardization 5990390
Not for Resale, 2015/7/22 06:49:48