AS/NZS 3718:2005

AS/NZS 3718:2005
(Incorporating Amendment Nos 1 and 2)
Reconfirmed 2016

Australian/New Zealand Standard™

Water supply—Tap ware

STANDARDS Australia

STANDARDS NEW ZEALAND PAEREWA AOTEAROA

This Joint Australian/New Zealand Standard was prepared by Joint Technical Committee WS-001, Water Fittings. It was approved on behalf of the Council of Standards Australia on 29 March 2005 and on behalf of the Council of Standards New Zealand on 29 April 2005.
This Standard was published on 1 June 2005.

The following are represented on Committee WS-001:

AUSTAP
Australian Chamber of Commerce and Industry
Australian Industry Group
Building Research Association of New Zealand
Business New Zealand
Department of Land and Water Conservation NSW
Master Plumbers Association of NSW
Master Plumbers, Gasfitters and Drainlayers New Zealand
New Zealand Association of Plumbing Distributors
Plastics Industry Pipe Association of Australia
Plastics New Zealand
Queensland Brassware Industry Advisory Panel
South Australian Water Corporation
The Institute of Plumbing Australia

Keeping Standards up-to-date

Standards are living documents which reflect progress in science, technology and systems. To maintain their currency, all Standards are periodically reviewed, and new editions are published. Between editions, amendments may be issued. Standards may also be withdrawn. It is important that readers assure themselves they are using a current Standard, which should include any amendments which may have been published since the Standard was purchased.

Detailed information about joint Australian/New Zealand Standards can be found by visiting the Standards Web Shop at www.standards.com.au or Standards New Zealand web site at www.standards.co.nz and looking up the relevant Standard in the on-line catalogue.

Alternatively, both organizations publish an annual printed Catalogue with full details of all current Standards. For more frequent listings or notification of revisions, amendments and withdrawals, Standards Australia and Standards New Zealand offer a number of update options. For information about these services, users should contact their respective national Standards organization.

We also welcome suggestions for improvement in our Standards, and especially encourage readers to notify us immediately of any apparent inaccuracies or ambiguities. Please address your comments to the Chief Executive of either Standards Australia or Standards New Zealand at the address shown on the back cover.

This Standard was issued in draft form for comment as DR 04464.

STANDARDS AUSTRALIA/STANDARDS NEW ZEALAND

RECONFIRMATION

OF
AS/NZS 3718:2005
Water supply—Tap ware

RECONFIRMATION NOTICE

Technical Committee WS-001 has reviewed the content of this publication and in accordance with Standards Australia procedures for reconfirmation, it has been determined that the publication is still valid and does not require change.

Certain documents referenced in the publication may have been amended since the original date of publication. Users are advised to ensure that they are using the latest versions of such documents as appropriate, unless advised otherwise in this Reconfirmation Notice.

Approved for reconfirmation in accordance with Standards Australia procedures for reconfirmation on 3 September 2015.

Approved for reconfirmation in New Zealand on behalf of the Standards Council of New Zealand on 4 November 2016.

The following are represented on Technical Committee WS-001:

Association of Accredited Certification Bodies
Australian Industry Group
Building Officials Institute of New Zealand
CSIRO
Gas Technical Regulators Committee
Housing Industry Association
National Association of Testing Authorities Australia
Plastics Industry Pipe Association of Australia
Plastics New Zealand
Plumbing Distributors Association of New Zealand
Plumbing Products Industry Group
Queensland Brassware Association
The Institute of Plumbing Australia
Water Services Association of Australia

NOTES

AS/NZS 3718:2005
(Incorporating Amendment Nos 1 and 2)

Australian/New Zealand Standard™

Water supply—Tap ware

Originated in part as part of AS B1—1928T and MP 52—2001.
Previous editions AS 1718—1992, AS 3496—1999,
AS/NZS 3718:1997 and MP 52—2001.
AS 1718—1992, AS 3496—1999, AS/NZS 3718:1997 and part of
MP 52—2001 jointly revised, amalgamated and redesignated as
AS/NZS 3718:2003.
Second edition AS/NZS 3718:2005.
Reissued incorporating Amendment No. 1 (May 2006).
Reissued incorporating Amendment No. 2 (December 2008).

COPYRIGHT

© Standards Australia/Standards New Zealand

All rights are reserved. No part of this work may be reproduced or copied in any form or by any means, electronic or mechanical, including photocopying, without the written permission of the publisher.

Jointly published by Standards Australia, GPO Box 476, Sydney, NSW 2001 and Standards New Zealand, Private Bag 2439, Wellington 6020

ISBN 0 7337 6738 9

PREFACE

A2 This Standard was prepared by the Joint Standards Australia/Standards New Zealand Committee WS-001, Water Fittings, to supersede AS/NZS 3718:2003.

The objective of this revision is to incorporate the testing requirements for the determination of flow rates required by the Water Efficient Labelling and Standards Scheme (WELS) and to correct errors in the previous edition.

This Standard incorporates Amendment No. 1 (May 2006) and Amendment No. 2 (December 2008). The changes required by the Amendment are indicated in the text by a marginal bar and amendment number against the clause, note, table, figure or part thereof affected.

The term 'normative' has been used in this Standard to define the application of the appendix to which it applies. A 'normative' appendix is an integral part of a Standard.

Statements expressed in mandatory terms in notes to figures are deemed to be requirements of this Standard.

CONTENTS

Page

SECTION 1 SCOPE AND GENERAL
1.1 SCOPE 5
1.2 REFERENCED DOCUMENTS 5
1.3 DEFINITIONS 5
1.4 SIZE DESIGNATION 7
1.5 MARKING REQUIREMENTS 7
1.6 INSTALLATION INSTRUCTIONS 8

SECTION 2 MATERIALS
2.1 SCOPE OF SECTION 10
2.2 METALLIC MATERIALS 10
2.3 STAINLESS STEEL 11
2.4 PLASTIC MATERIALS 11
2.5 PLASTIC AND ELASTOMERIC MATERIALS 11
2.6 OTHER MATERIALS 11

SECTION 3 DESIGN AND MANUFACTURE
3.1 SCOPE OF SECTION 13
3.2 END CONNECTORS 13
3.3 SPINDLES 13
3.4 SCREW THREADS 13
3.5 WATER SHUT-OFF DEVICE 14
3.6 JUMPER VALVE 14
3.7 THICKNESS OF METAL PARTS 14
3.8 FABRICATED ASSEMBLIES 15
3.9 OUTLETS 15
3.10 OPERATING MECHANISMS 16
3.11 FINISH AND WORKMANSHIP 16
3.12 ACCESSORIES OR COMPONENTS SUPPLIED WITH TAP PRODUCTS 16
3.13 TAPS AND TAP COMPONENTS TO SUIT INDUSTRY-SPECIFIC DIMENSIONAL CHARACTERISTICS 17

SECTION 4 PERFORMANCE REQUIREMENTS
4.1 GENERAL 18
4.2 PLASTIC MATERIALS USED FOR PLASTIC-BODIED TAPS 18
4.3 HYDRAULIC STRENGTH TEST 18
A2 4.4 SURFACE-MOUNTING STRENGTH TEST FOR TAPS 18
4.5 WATERTIGHTNESS UNDER PRESSURE 18
4.6 NOMINAL FLOW RATE 18
4.7 CONTAMINATION OF WATER 19
4.8 TORQUE OF FABRICATED JOINTS 19
4.9 TORQUE OF HANDLE ATTACHMENT 19
4.10 TORQUE OF HEAD TO BODY 19
4.11 TORQUE OF OPERATING MECHANISM 19
4.12 ENDURANCE TEST FOR TAPS AND TAP COMPONENTS 19
4.13 STRENGTH OF CONNECTOR NUT AND ASSEMBLY 20
4.14 STRENGTH OF BUTTON-OPERATED AND FOOT-OPERATED TAPS 20
4.15 RESISTANCE OF HANDLE TO REMOVAL 20

Page

APPENDICES

A MEANS FOR DEMONSTRATING COMPLIANCE WITH THIS STANDARD 21
B LIST OF REFERENCED DOCUMENTS 25
C RESISTANCE OF PLASTIC-BODIED TAPS TO CHEMICAL DEGRADATION . 27
D HYDRAULIC STRENGTH TEST FOR TAP ASSEMBLIES 29
A2 | E SURFACE-MOUNTING STRENGTH TEST FOR TAPS 32
F DETERMINATION OF WATERTIGHTNESS 33
A2 | G DETERMINATION OF THE NOMINAL FLOW RATE OF TAPS AND TAP OUTLETS FOR USE WITH HIGH PRESSURE 36
H TORQUE TEST FOR FABRICATED ASSEMBLIES 39
I TORQUE TEST FOR HANDLE AND HANDLE ATTACHMENT 41
J TORQUE TEST FOR HEAD-TO-BODY CONNECTION 43
K TORQUE TEST FOR OPERATING MECHANISM OF TAP 45
L ENDURANCE TEST FOR TAPS AND COMPONENTS 47
M STRENGTH TEST FOR CONNECTOR NUTS AND ASSEMBLY 51
N LOAD TEST FOR BUTTON-OPERATED AND FOOT-OPERATED TAPS 53
O DIMENSIONS OF TAPS 54
P SIMULATED SAMPLES 69
Q ENDURANCE TEST FOR FLOW CONTROLLERS 71
A2 | R DETERMINATION OF THE NOMINAL FLOW RATE OF TAPS AND TAP OUTLETS FOR USE WITH LOW AND UNEQUAL PRESSURES 74

STANDARDS AUSTRALIA/STANDARDS NEW ZEALAND

Australian/New Zealand Standard

Water supply—Tap ware

SECTION 1 SCOPE AND GENERAL

1.1 SCOPE

This Standard specifies requirements for metallic taps, plastic taps, mixing taps, sensor taps, lever taps, timed flow taps, mixing taps mechanical (non-thermostatic), and tapsets in a range of nominal sizes from DN 6 to DN 50, generally for continuous operating temperatures not exceeding 80°C. Products designed for other temperature ranges are included where tested to the appropriate temperature criteria.

The Standard also specifies requirements for outlets of a tap or mixing tap and the requirements for tapset breaching piece assemblies.

Means for demonstrating compliance with this Standard are given in Appendix A.

A2 NOTES:

1 Certification under the Plumbing Code of Australia is mandatory in Australia but not in New Zealand.

2 Where the static hot and cold water supply systems pressures are below 35 kPa, then water-efficient tap ware may not need to be fitted.

1.2 REFERENCED DOCUMENTS

The documents referred to in this Standard are listed in Appendix B.

1.3 DEFINITIONS

For the purpose of this Standard, the definitions given in AS/NZS 3500.0 and those below apply.

1.3.1 Back nut

A nut that retains surface-mounted tap ware.

1.3.2 Bathroom basin tap

A tap that is designed to turn on and turn off the flow of water into a basin or bowl that is used primarily for washing the hands and face.

1.3.3 Certificate of compliance

A statement/declaration that a product and/or service complies with stated requirements.

1.3.4 Connector nut

A nut that connects two or more components together to provide a seal.

1.3.5 Distortion

A flaw that is obvious to the eye without resorting to dimensional checking.

1.3.6 Fabricated assembly

Joining of two or more components in the manufacturing process, which is intended as a permanent joint.

COPYRIGHT

1.3.7 Flow controller

A device designed to regulate the flow rate so as to maintain a constant flow rate over a given range of pressures.

1.3.8 Isolating tap

An in-line tap for insertion into the pipeline to deliver water to a tap, valve, fixture, or combination thereof, and which is shut only for maintenance or failure of the downstream installation.

1.3.9 Kitchen sink tap

A device that is designed to turn on and turn off the flow of water into a sink in a kitchen, food preparation or dishwashing environment.

1.3.10 Laundry tub tap

A device that is designed to turn on and turn off the flow of water into a sink or tub in a laundry or washroom.

1.3.11 Lever tap

A tap that is operated by the movement of a lever.

1.3.12 Mixing tap mechanical (non-thermostatic)

A tap into which hot and cold water enters through more than one port and is mixed in a chamber.

1.3.13 Nominal flow rate

A2 The water consumption of a fully open water tap, which is measured in litres per minute, using a dynamic water pressure of—

(a) 35 kPa in accordance with Appendix R;

(b) 250 kPa; or

(c) the average of 150, 250 and 350 kPa in accordance with Appendix G.

1.3.14 Nominal size

The size determined from the inlet connection.

1.3.15 Non-rising spindle tap

A tap in which the spindle does not rise when the tap is opened.

1.3.16 OEM (original equipment manufacturer) market

A market segment requiring tap ware components and/or subassemblies utilizing certified and/or non-certified components for incorporation into a complete product assembly certified as part of the subsequent manufacturing process.

1.3.17 Outlet

The portion of the tap assembly after the shut-off device where water flows for its intended use.

1.3.18 Retrofit (retail) market

A market segment requiring tap ware subassemblies, components and/or replacement parts to be installed in the field with other manufacturers' compatible products.

1.3.19 Rising spindle tap

A screw-down tap in which the spindle rises when the tap is opened.

COPYRIGHT

1.3.20 Scaling factor

The ratio of the *end-use* surface area-to-volume ratio to the *test* surface area-to-volume ratio.

1.3.21 Sensor taps

A tap operated without physical contact.

1.3.22 Stop tap

A tap with inlet and outlet connections. It usually incorporates a loose jumper valve and permits flow in one direction only.

1.3.23 Tap body

That part of a tap or of a tap assembly that includes the inlet and outlet connections.

1.3.24 Tap head

That part of a tap assembly that is removable and retains the shut-off device.

1.3.25 Tapset breaching piece assembly

Two or more stop tap bodies in an assembly.

1.3.26 Test certificate

A certificate that shows the results of tests undertaken to establish stated requirements.

1.3.27 Timed flow tap

A tap that is automatically turned off after a predetermined delivery time and/or volume.

1.3.28 Unit construction

The components of a tap that cannot be readily removed by unscrewing.

1.3.29 WELS Scheme

Water Efficiency Labelling and Standards Scheme.

A1, A2 **1.3.30 High pressure**

Where both the hot water and cold water supply pressures are at 150 kPa or above.

A2 **1.3.31 Low pressure**

Where both the hot water and cold water supply pressures are below 150 kPa.

A2 **1.3.32 Unequal pressure**

Where the hot water supply pressure is below 150 kPa and the cold supply pressure is at or above 150 kPa.

1.4 SIZE DESIGNATION

The size by which a tap is designated shall be determined by its inlet connection. The designated size shall be between DN 6 and DN 50.

A1 **1.5 MARKING REQUIREMENTS**

1.5.1 Taps

All taps shall be marked legibly and visibly as follows:

(a) Certification mark, the number of this Standard i.e., AS/NZS 3718 and manufacturer's licence number on the body and head. Where sold as integral tap, marking on the body. Marking shall be durable.

COPYRIGHT

(b) On stop taps, isolating taps and regulating taps, the words 'INLET' or 'IN', 'OUTLET' or 'OUT', or a directional arrow.

A1 (c) On taps intended for the supply of hot water only, the letter 'H' or the word 'HOT' or a red indicator. On taps intended for the supply of tempered water only, the letter 'W' or the word 'WARM' or a yellow indicator. On taps intended for the supply of cold water only, the letter 'C' or the word 'COLD' or a blue indicator.

NOTE: For marking of taps intended for the supply of tempered water only, consult the relevant regulatory body.

(d) On combined taps and tapset breaching pieces and mixing taps mechanical, if the hot and cold inlets cannot be interchanged, a mark identifying the hot or cold inlet. This mark need only be visible prior to installation.

(e) On mixing taps, mechanical (non-thermostatic) markings, necessary to clearly indicate the direction of operation to select hot, cold and mixed temperature of the flow of water from the outlet, positioned to be clearly visible to the user.

(f) For taps and pressure-sensitive components that are individually packaged, the 'maximum operating pressure' clearly visible on packaging, labelling or instruction sheet.

A1 (g) For taps intended for particular applications, their intended use (e.g., basin, kitchen sink, ablution trough, laundry tub, etc.).

Operating temperature and pressure limitations shall be included on the product or packaging or installation instructions.

A1 NOTE: Manufacturers making a statement of compliance with this Australian/New Zealand Standard on a product, packaging, or promotional material related to that product are advised to ensure that such compliance is capable of being verified.

1.5.2 Components

1.5.2.1 *Components for the retrofit market*

Tap components, excluding handles and covers intended for sale to the retrofit market, shall be legibly marked on the product or packaging with the manufacturer's licence number and the certification mark and compatibility requirements.

1.5.2.2 *Components for the OEM market*

Tap components intended for sale to the OEM market shall display the manufacturer's licence number and certification mark on packaging only, since these components may be assembled into taps with other certified or non-certified componentry. Where authorized by contract, a component manufacturer may apply certification-marking details applicable to the 'customer's' product certification marking requirements.

A1,

1.6 PACKAGING AND INSTALLATION INSTRUCTIONS

1.6.1 Intended application

A2 Taps and outlets that are required to conform with AS/NZS 6400 shall be labelled on the packaging with their nominated supply pressure (e.g., high pressure, low and/or unequal pressure) and intended application (e.g., basin, kitchen sink, ablution trough, laundry tub).

1.6.2 Installation instructions

Tap ware requiring assembly and fitting, as part of the installation process, shall be accompanied by installation instructions in the English language, including a description of

A2 installation requirements and operating temperature and pressure application or limitation.

COPYRIGHT

The installation instructions shall include clauses, reflecting the requirements of the warranty as defined in the Plumbing Code of Australia, New Zealand Building Code and the installation requirements of AS/NZS 3500 series of Standards, including any limitations on the product's use.

For tap ware intended to comply with AS/NZS 6400, the installation instructions shall include adequate reference to commissioning the product, and ensuring that any flow controller incorporated in the outlet is tightened to prevent removal by hand.

COPYRIGHT

SECTION 2 MATERIALS

2.1 SCOPE OF SECTION

This Section specifies requirements for the materials for tap bodies and component parts of taps.

2.2 METALLIC MATERIALS

2.2.1 Use of metallic material

Metallic materials used for the following shall be corrosion-resistant as specified in Clause 2.2.2:

(a) Tap bodies and tapset breeching piece.

(b) Other components that are made from metals and that are in contact with water.

2.2.2 Corrosion-resistant metallic materials

For the purpose of this Standard, the following materials are deemed to be corrosion-resistant:

(a) Copper specified in Clause 2.2.3.

(b) Copper alloy specified in Clause 2.2.4 and 2.2.5.

(c) Stainless steel specified in Clause 2.3.

(d) Material for springs specified in Clause 2.6 (c).

(e) Other materials as specified in Clause 2.6.

2.2.3 Copper

Copper shall comply with the following:

A2 (a) *Wrought products*—AS 2738.

(b) *Tubular components*—Copper pipe complying with AS 1432, NZS 3501 or ISO 274.

2.2.4 Copper alloy

Copper alloy shall comply with the following:

(a) *Castings*—AS 1565 or NZS/BS 1400 and a lead content of less than 4.5%.

(b) *Hot pressings*—AS/NZS 1568.

(c) *Rod for machined parts*—AS/NZS 1567.

(d) *Tubular components*—Copper alloy pipe complying with AS/NZS 1572 alloy designation C 26130. Where bent or stamped in the fabrication process, the pipe to be sufficiently stress-relieved, so that it is capable of passing the mercurous nitrate test specified in AS 2136 after all fabrication processes are completed.

NOTE: AS 2136 requires that the entire pipe component be tested before any coating or plating operation.

2.2.5 Dezincification-resistant (DR) copper alloy

Copper alloys in contact with water shall comply with AS 2345.

COPYRIGHT

2.3 STAINLESS STEEL

Stainless steel shall comply with the following:

A2 (a) *Wrought components*—ASTM A276, series 300 and UNS S32750, S32304, S31803, S31500 Duplex (ferritic-austenitic) stainless steels.

(b) *Tubular components*—ASTM A269 or AS 1769 and UNS S32750, S32304, S31803, S31500 Duplex (ferritic-austenitic) stainless steels.

2.4 PLASTIC MATERIALS

2.4.1 General

Plastic materials used in tap components shall be of a type recommended by the polymer manufacturer as suitable and appropriate for use in the manufacture of the tap component or otherwise demonstrate suitability. Characteristics to be taken into account shall include compatibility and resistance to variations in water quality and elevated temperatures.

2.4.2 Acetal

Acetal plastics used for structural components that are in contact with the water supply shall be copolymer.

2.5 PLASTIC AND ELASTOMERIC MATERIALS

2.5.1 UV resistance

The materials of plastics components that are designed to be exposed to direct sunlight, when installed, shall not crack, craze or exhibit signs of any defect when tested in accordance with AS 3558.5.

2.5.2 Resistance to chemical degradation

When tested in accordance with the requirement of Clause 4.2, plastic-bodied taps shall comply with following:

(a) Upon completion of the exposure period, samples shall show no cracking, crazing or surface degradation visible to the naked eye.

(b) Upon completion of the exposure period and subsequent short-term endurance test, samples shall comply with the requirements of Clauses 4.3 (hydraulic strength of plastic-bodied tap assembly) and Clause 4.5 (watertightness under pressure).

2.6 OTHER MATERIALS

The following applies

(a) *Ceramics* Ceramic materials may be used.

(b) *Filler metals* Filler metal shall be one of the following:

(i) Silver brazing alloy containing not more than 0.05% cadmium, complying with AS 1167.1.

(ii) Copper-phosphorous brazing alloys complying with AS 1167.1 with a minimum of 1.8% silver.

(iii) Solder complying with the requirements of AS 1834.1 and having a maximum of 0.1% lead.

COPYRIGHT

(c) *Material for springs* Materials for springs shall comply with one of the following:

(i) Stainless steel to AS 2837, Grade 302 or Grade 304 or Grade 316, ASTM A313.

(ii) Phosphor bronze to AS 2738.2, Alloy 518.

NOTE: Other grades may be used providing they meet the performance criteria of this Standard.

(d) *Nickel-copper-iron* Nickel-copper-iron shall comply with one of the following:

(i) AS 2738.2, Alloy 713; or

(ii) ASTM B127, ASTM B163, ASTM B164 and ASTM B165.

(e) *Zinc alloy die-castings* Zinc alloy die-castings shall only be used for non-pressure applications and shall comply with AS 1881.

(f) *Washers and sealing rings* Washers and sealing rings shall comply with Clause 4.7 and the following:

(i) *Gland packing* Material for gland packing shall be asbestos free and suitable for hot or cold water.

(ii) *O-ring* Material for O-rings shall comply with the requirements of Table 2.1.

(g) *Lubricants* Lubricants shall comply with Clause 4.7.

NOTE: Handles and covers, other than T-head handles, may be manufactured from other materials not specified in this Section, provided they meet the performance criteria of this Standard.

TABLE 2.1

REQUIREMENTS FOR MATERIAL FOR O-RINGS

Characteristic	Value	Test Method
Physical properties	—	ASTM D 1414
International hardness Change in IRH (effect of liquids, immersed in ASTM Oil No.1 at 100°C for 70 h) Change in IRH (deterioration by heating in air at 100°C for 70 h)	IRH 70 ±5 IRH limits ±5 IRH limits ±15	ASTM D 1415 ASTM D 471 ASTM D 865
Tensile strength Change in tensile strength (effect of liquids, immersed in ASTM Oil No.1 at 100°C for 70 h) Change in tensile strength (deterioration by heating in air at 100°C for 70 h)	1 MPa (min.) 15% (max.) 15% (max.)	ASTM D 412 ASTM D 471 ASTM D 865
Ultimate elongation Change in ultimate elongation (effect of liquids, immersed in ASTM Oil No.1 at 100°C for 70 h) Change in ultimate elongation (deterioration by heating in air at 100°C for 70 h)	250% (min.) 30% (max.) 40% (max.)	ASTM D 412 ASTM D 471 ASTM D 865
Compression set (100°C for 22 h)	35% max	ASTM D 395 Method B

COPYRIGHT

SECTION 3 DESIGN AND MANUFACTURE

3.1 SCOPE OF SECTION

This Section specifies requirements for the design and manufacture of taps including their integral components

NOTE: Illustrations used in this Standard are diagrammatic only and have been chosen without prejudice.

3.2 END CONNECTORS

NOTE: It should be noted that Australia and New Zealand have different dimensional requirements for end connectors.

3.2.1 Copper and copper alloy end connectors

Copper and copper alloy-end connectors for use in Australia shall comply with AS 3688.

3.2.2 Other end connectors

Other end connectors shall comply with the relevant Australian or New Zealand Standards or Australian Technical Specifications.

3.3 SPINDLES

Spindles shall be of sufficient length to ensure that—

(a) where the tap is fitted with a loose jumper valve with the washer removed, the handle is clear of any external obstruction when the tap is in the closed position; and

(b) where the tap is fitted with an O-ring type head assembly and a fixed handle, the O-ring is accessible for replacement.

3.4 SCREW THREADS

3.4.1 General

Threads on components of taps may be right-hand or left-hand and shall comply with this Clause.

3.4.2 Thread engagement

Threaded joints that will be disassembled for any purpose shall have the minimum number of full threads engaged as specified in Table 3.1. For threaded joints that are assembled in a permanent manner, the minimum number of threads engaged as specified in Table 3.1 may be reduced by 40%, provided no less than two full threads are used. The number of full threads shall be counted when the threaded joint is assembled with washers or seals.

TABLE 3.1

THREAD ENGAGEMENT

Thread nominal size*	Other threads (major diameter) mm	Minimum number of full threads engaged
<1/25	<35	3
>1/25 ≤2/50	>35 ≤60	4
>2/50 ≤3/80	>60 ≤90	5

* Pipe threads to AS 1722.1 and AS 1722.2.

COPYRIGHT

3.5 WATER SHUT-OFF DEVICE

The water shut-off device may be of the manufacturer's own design.

3.6 JUMPER VALVE

3.6.1 Design

Where the shut-off device is a jumper valve and compatibility and connectability are required, loose jumper valves shall comply with Figure O10, Appendix O. Alternatively, the jumper valve may be of the manufacturer's own design.

3.6.2 Construction

Jumper valve stems and washer plates shall be of unit construction.

3.7 THICKNESS OF METAL PARTS

3.7.1 General

The thickness of material in any part of a tap shall be as specified in this Standard. Unless otherwise specified, the measured thickness shall exclude the depth of any screw thread and the thickness of any coating or plating material.

The minimum thicknesses do not apply to parts that are not critical to the performance of the tap.

NOTE: Parts that are not critical to the performance include decorative covers and parts that, if removed, would not affect the operation of the tap.

3.7.2 Copper, copper alloy and stainless steel tubes

The minimum mean thickness of copper, copper alloy and stainless steel tubes shall be as specified in AS 1432 for Type B tubes or NZS 3501. Where the mean outside diameter is not equivalent to those tubes specified in AS 1432 or NZS 3501 the minimum wall thickness of the tubes shall be that specified in AS 1432 or NZS 3501 for the next larger size.

3.7.3 Other sections

Where the thickness of a part is not specified elsewhere in this Standard, it shall be in accordance with Table 3.2.

The measured thickness shall exclude the depth of any screw thread and the thickness of any coating or plating material.

TABLE 3.2

MINIMUM WALL THICKNESS OF UNSPECIFIED METAL PARTS

Nominal size DN	Plain sections subject to permanent hydrostatic pressure, mm	Plain sections not subject to permanent hydrostatic pressure, mm
6	1.8	1.1
8	1.8	1.1
10	1.8	1.1
15	1.8	1.1
20	1.8	1.1
25	2.2	1.4
32	2.2	1.4
40	2.8	1.7
50	2.8	1.7

NOTE: Hydrostatic pressure refers to pressure under no flow conditions.

COPYRIGHT

3.8 FABRICATED ASSEMBLIES

Fabricated assemblies shall pass the torque test as specified in Clause 4.8.

A1

3.9 OUTLETS

3.9.1 Unit construction outlets

Outlets that are of unit construction with the tap body shall comply with the requirements of this Standard, as applicable.

3.9.2 Other outlets

All other outlets, including flexible free water outlets, shall comply only with Clause 3.2, Clause 3.11 and Clause 4.7, except as specified in Clauses 3.9.3 to 3.9.5.

3.9.3 Flexible hoses

3.9.3.1 *Backflow prevention*

Where flexible hoses are supplied with the tap they shall incorporate backflow prevention in accordance with AS/NZS 3500.1.

3.9.3.2 *Flexible hoses with shut-off devices*

Flexible hoses with shut-off devices shall comply with the performance requirements of both this Standard and AS/NZS 3499.

3.9.4 Hose tap outlets

Hose tap outlets shall comply with the dimensional criteria specified in Figure 3.1.

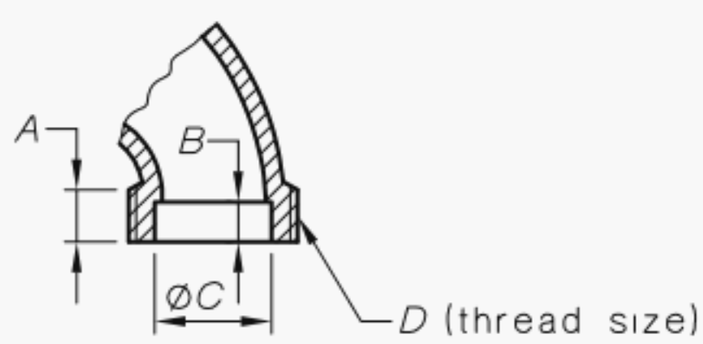

A (min.) mm	*B* (min.) mm	*C* mm		*D** (thread size designation in inches)
		Min.	Max.	
9	5	16.8	17.0	3/4
9	7	22.3	22.8	1
13	8	30.3	30.8	11/4
13	9	35.0	35.3	11/2
13	9	41.4	41.9	2
16	11	52.5	52.9	21/2

FIGURE 3.1 HOSE TAP OUTLETS

3.9.5 Showerheads for personal bathing

Showerheads shall comply with AS/NZS 3662.

Showerheads complying with AS/NZS 3662 and packaged with complying tap assemblies may seek product certification under AS/NZS 3718.

COPYRIGHT

3.10 OPERATING MECHANISMS

The handle, lever or button may be fitted to the spindle by any means provided that—

A1, A2

(a) the assembly is capable of passing the torque test in accordance with Clause 4.9 and Clause 4.11;

(b) the handle is removable, should this be necessary for the replacement or adjustment of sealing devices;

(c) the handles of wall-mounted bath or shower taps comply with Clause 4.15;

(d) foot-operated taps are designed so as to be capable of passing the load test specified in Clause 4.14;

(e) button-operated taps are designed so as to be capable of passing the load test specified in Clause 4.14;

(f) isolating taps are designed to operate without a handle provided that the spindle is supplied with a screwdriver slot or wrenching flats;

(g) taps have special operating provisions in lieu of handles to prevent unauthorized use or vandalism; and

(h) the outer end of the spindle of a ferrule stop tap is suitable for adaptors.

3.11 FINISH AND WORKMANSHIP

Taps and tap components shall comply with the following requirements:

(a) Components shall be sound and free from folds, laps, blisters, laminations, blowholes, and other defects that affect the performance or function of the taps in service.

(b) Sealing faces shall not be pitted. Pitting is permitted elsewhere provided that the minimum wall thickness requirements of this Standard are maintained.

(c) Castings shall be plugged, stopped, or patched but only by a vacuum impregnation process with a material complying with Clause 4.7, and hydrostatically tested in accordance with Clause 4.5.

(d) Taps shall be supplied free of sand, grit and swarf.

(e) All moving parts of the tap shall be adequately lubricated with a non-toxic water insoluble lubricant complying with Clause 4.7. The lubricant may be contained within the material structure of a tap component.

(f) Finished taps shall be free of burrs, fins, irregularities and sharp edges that would affect the performance or function of the tap in service or the safe handling of the tap during installation or use.

(g) Where decorative finishes are applied, they shall comply with the criteria of the relevant Standard and industry norms.

3.12 ACCESSORIES OR COMPONENTS SUPPLIED WITH TAP PRODUCTS

3.12.1 General

Accessories or components supplied integral with the tap shall comply with the requirements of the relevant Standard.

3.12.2 Flexible hose connectors

Flexible hose connectors shall comply with AS/NZS 3499.

COPYRIGHT

3.12.3 Integral backflow devices

Taps incorporating integral backflow-prevention devices shall comply with the relevant requirements of AS/NZS 2845.1.

3.13 TAPS AND TAP COMPONENTS TO SUIT INDUSTRY-SPECIFIC DIMENSIONAL CHARACTERISTICS

3.13.1 General

Clauses 3.13.2, 3.13.3, 3.13.4, 3.13.5, 3.13.6 and 3.13.7 set out the specific dimensional characteristics to accommodate the interchange ability of components of the same size and type produced by different manufacturers. This includes installation practices common in Australia, whereby different parts of a tap may be installed at different times during building construction.

It shall be the responsibility of the manufacturer to include sufficient relevant information with the product, to enable the product to be correctly installed with applicable compatible assemblies.

3.13.2 Valve seating, valve chamber and tap head connection

The valve seat, chamber and tap head connection shall conform to the dimensions shown in Figure O2 and Figure O3, Appendix O.

3.13.3 Tap head

The tap head fixing detail shall conform to the dimensions shown in Figure O6 or O7, Appendix O.

3.13.4 Spindle end

The spindle end to suit a loose jumper valve shall conform to the dimensions shown in Figure O8 or O9, Appendix O.

3.13.5 Loose jumper valves

Loose Jumper valve stems and washer plates shall be of unit construction and conform to the dimensions shown in Figure O10, Appendix O.

3.13.6 Tapset breaching piece assemblies

Tapset breaching piece assemblies shall comply with the requirements of this Standard.

3.13.7 Replacement tap seats

Replacement tap seat inserts shall comply with the requirements of this Standard. The minimum wall thickness, excluding the depth of thread, shall be as follows:

(a) Copper alloy ..... 1.1 mm

(b) Stainless steel ..... 0.6 mm

COPYRIGHT

SECTION 4 PERFORMANCE REQUIREMENTS

4.1 GENERAL

All products and components shall be tested to the relevant performance requirements.

4.2 PLASTIC MATERIALS USED FOR PLASTIC-BODIED TAPS

When tested in accordance with Appendix C, a tap assembly shall exhibit characteristics for compatibility and resistance to variations in water chemistry and elevated temperatures.

4.3 HYDRAULIC STRENGTH TEST

When tested in accordance with Appendix D, a tap assembly shall show no signs of distortion, splitting, cracking or breakage or other failure.

A2 **4.4 SURFACE-MOUNTING STRENGTH TEST FOR TAPS**

When tested in accordance with Appendix E, the surface-mounting components of the tap shall show no signs of cracking, deformation, stripping of threads or unsecured mounting, and shall comply with the requirements of the Clause 4.5.

NOTE: This Clause does not apply to recessed, wall-mounted tap bodies.

4.5 WATERTIGHTNESS UNDER PRESSURE

When tested in accordance with Appendix F, a tap or hand spray with shut-off device shall show no signs of cracks, leakage, or other failure.

4.6 NOMINAL FLOW RATE

4.6.1 General

A2 **4.6.1.1** *High pressure*

The flow rate of a tap or tap outlet shall be determined in accordance with Appendix G.

4.6.1.2 *Low and unequal pressure*

The flow rate of a tap or tap outlet shall be determined in accordance with Appendix R.

4.6.2 Outlets where compliance with AS/NZS 6400 is mandatory

A2 **4.6.2.1** *High pressure*

Where labelling compliance with AS/NZS 6400 is mandatory, the nominal flow rate shall be determined in accordance with Appendix G, and shall comply with the following:

(a) The maximum difference between the highest and lowest average flow rate shall not exceed 2.0 L/min.

(b) The highest average flow rate shall not exceed the upper limit of the flow range for the determined nominal flow rate in AS/NZS 6400 by more than 1.0 L/min.

(c) The lowest average flow rate shall be not less than the lower limit of the flow range for the determined nominal flow rate in AS/NZS 6400 by more than 1.0 L/min.

4.6.2.2 *Low and unequal pressure*

Where labelling compliance with AS/NZS 6400 is mandatory, the nominal flow rate shall be determined in accordance with Appendix R.

COPYRIGHT

4.6.3 Other taps and outlets

For taps and outlets that are not covered by AS/NZS 6400, their nominal flow rate may be determined at 250 kPa dynamic flow pressure.

NOTE: Example of taps not covered by AS/NZS 6400 are bath taps, washing machine taps, cistern taps, garden hose taps, etc.

4.7 CONTAMINATION OF WATER

Materials in contact with drinking water shall comply with AS/NZS 4020.

Metallic components made from a single material may be pre-qualified by use of simulated samples for certification in accordance with Appendix P.

4.8 TORQUE OF FABRICATED JOINTS

When a fabricated tap assembly is tested in accordance with Appendix H, the fabricated joint shall show no signs of splitting, cracking, distortion, or thread damage. This test is a test of a fabricated joint and twisting of copper pipe tails is not a failure of the test

4.9 TORQUE OF HANDLE ATTACHMENT

When a handle assembly is tested in accordance with Appendix I, the handle and handle attachment shall show no signs of cracking, breaking, or stripping of thread.

4.10 TORQUE OF HEAD TO BODY

When tested in accordance with Appendix J, the head to body connection shall show no distortion, stripping of mating thread or parts, damage to wrenching flats or internal components.

4.11 TORQUE OF OPERATING MECHANISM

When tested in accordance with Appendix K, a tap-operating mechanism shall show no signs of cracking, bending or damage.

4.12 ENDURANCE TEST FOR TAPS AND TAP COMPONENTS

4.12.1 Endurance test for tap operating mechanisms

4.12.1.1 *General*

Taps and tap components shall be capable of passing the endurance test in accordance with Appendix L.

A1 Where endurance testing for flow controllers in taps to Appendix Q is required, this may be carried out by stopping the endurance test in Appendix L at 10 000 cycles and testing to Appendix Q, then completing the remaining requirements of Appendix L.

4.12.1.2 *Pre-endurance testing*

The watertightness test shall be carried out before the endurance test (see Clause 4.5).

4.12.1.3 *Cycles*

The endurance test is applicable to the following cycle range:

(a) Isolating or drain taps ..... 10 000 ±100 cycles.

(b) Other taps ..... 50 000 ±500 cycles.

(c) Jumper valves ..... 25 000 ±250 cycles.

COPYRIGHT

4.12.1.4 *Subsequent tests*

Following the endurance test, taps shall be capable of passing the following:

(a) Watertightness under pressure test where applicable (see Clause 4.5).

(b) Torque of operating mechanism test where applicable (see Clause 4.11).

(c) Resistance of handle to removal test where applicable (see Clause 4.15).

4.12.2 Endurance test for flow controllers in taps

Where compliance with AS/NZS 6400 is mandatory, taps or non-integrated tap outlets containing flow controllers shall be tested to Appendix Q, and then shall be retested to Appendix G, and shall meet the following requirements:

(a) The maximum difference between the highest and lowest average flow rate, measured at pressures of 150 kPa, 250 kPa and 350 kPa, shall not exceed 2.0 L/min; and

(b) The flow rate shall be within ±1.0 L/min of the nominal flow rate as determined in Clause 4.6.1.

4.13 STRENGTH OF CONNECTOR NUT AND ASSEMBLY

When tested in accordance with Appendix M, the nut and assembly shall show no signs of splitting, cracking, distortion or thread damage, except for combinations of connector nuts and assemblies, manufactured of copper or copper alloys to comply with AS 3688 need not be tested.

4.14 STRENGTH OF BUTTON-OPERATED AND FOOT-OPERATED TAPS

When installed according to manufacturers' instructions and tested in accordance with Appendix N button-operated and foot-operated taps shall show no signs of cracks, breakages, bending or damage.

4.15 RESISTANCE OF HANDLE TO REMOVAL

The handles of wall-mounted bath or shower taps shall not fracture or pull off under an axial static load of 68 +0, –5 kg.

COPYRIGHT

APPENDIX A

MEANS FOR DEMONSTRATING COMPLIANCE WITH THIS STANDARD

(Normative)

A1 SCOPE

This Appendix sets out the means by which compliance with this Standard shall be demonstrated by a manufacturer under the WaterMark product certification scheme.

A2 RELEVANCE

The long-term performance of plumbing systems is critical to the durability of building infrastructure, protection of public health and safety, and protection of the environment.

A3 PRODUCT CERTIFICATION

The purpose of product certification is to provide independent assurance of the claim by the manufacturer that products comply with this Standard.

The certification scheme serves to indicate that the products consistently conform to the requirements of this Standard.

The sampling and testing plan, as detailed in Paragraph A5 and Table A1, shall be used by the Conformity Assessment Body. Where a batch release testing program is required, it shall be carried out as detailed in Paragraph A5 and Table A2, by the manufacturer.

A4 DEFINITIONS

A4.1 Batch release test

A test performed by the manufacturer on a batch of components, which has to be satisfactorily completed before the batch can be released.

A4.2 Production batch

Clearly identifiable collection of units, manufactured consecutively or continuously under the same conditions, using material or compound to the same specification.

A4.3 Sample

One or more units of product drawn from a batch, selected at random without regard to quality.

NOTE: The number of units of product in the sample is the sample size.

A4.4 Sampling plan

A specific plan that indicates the number of units of components or assemblies to be inspected.

A4.5 Type test batch

Schedule of units of the same type, identical dimensional characteristics, all the same nominal diameter and wall thickness, from the same compound. The batch is defined by the manufacturer.

A4.6 Type testing (TT)

Testing performed to demonstrate that the material, component, joint or assembly is capable of conforming to the requirements given in the Standard.

COPYRIGHT

A5 TESTING

A5.1 Type testing

Table A1 sets out the requirements for type testing and frequency of re-verification.

A1 Alternatively, the tests set out in Table A2 shall be undertaken on product at a laboratory recognized by the Conformity Assessment Body or by the manufacturer/supplier using their own calibrated testing equipment.

A5.2 Batch release testing

Table A2 sets out the minimum sampling and testing frequency plan for a manufacturer to demonstrate compliance of product(s) to this Standard on an ongoing basis. However, where the manufacturer can demonstrate adequate process control to the Conformity Assessment Body, the frequency of the sampling and testing nominated by the manufacturer's quality plan and/or documented procedures shall take precedence for the purposes of WaterMark product certification.

A5.3 Retesting

In the event of a test failure, the products within the batch shall be retested so as to ensure that only those batches found to comply may be claimed and/or marked as complying with this Standard.

TABLE A1

TYPE TESTING

Clause No./Issue		Test method	Tap	Components			
				Tap head/ Head assembly	Outlets	Tap body	Water shut-off device
Section 2 Materials *							
2.2	Metallic materials	Relevant Standards including AS 2345	✔	✔		✔	✔
2.3	Stainless steel	Relevant Standards	✔	✔		✔	✔
2.4	Plastic materials	Relevant Standards	✔	✔		✔	✔
2.5	Plastic and elastomeric materials	Relevant Standards	✔	✔		✔	✔
2.6	Other materials	Relevant Standards	✔	✔		✔	✔
Section 3 Design and manufacture							
3.2	End connectors	Relevant Standards	✔		✔	✔	
3.7	Thickness of metal body or head	Dimensional	✔	✔		✔	
3.9	Outlets	Dimensional	✔		✔		
3.12	Accessories	Dimensional	✔		✔		
3.13	Dimensions (where applicable)	Appendix O	✔	✔		✔	✔
Section 4 Performance requirements							
4.2	Plastic materials used for plastic-bodied taps	Appendix C	✔			✔	
4.3	Hydraulic strength test	Appendix D	✔			✔	

(continued)

COPYRIGHT

TABLE A1 (*continued*)

Clause No./Issue		Test method	Tap	Components			
				Tap head/ Head assembly	Outlets	Tap body	Water shut-off device
A2 4.4	Surface-mounting strength test for taps	Appendix E	✔				
4.5	Watertightness under pressure	Appendix F	✔				
A2 4.6	Nominal flow rate	Appendix G or R	✔				
4.7	Contamination of water	AS/NZS 4020	✔	✔	✔	✔	✔
4.8	Torque of fabricated joints	Appendix H	✔			✔	
4.9	Torque of handle attachment	Appendix I	✔	✔			
4.10	Torque of head to body	Appendix J	✔	✔			
4.11	Torque of operating mechanism	Appendix K	✔	✔			
4.12	Endurance test for taps and components	Appendix L	✔		✔		✔
4.13	Strength of connector nut and assembly	Appendix M	✔			✔	
4.14	Strength of button-operated and foot-operated taps	Appendix N	✔				
4.15	Resistance of handle to removal†	Clause 4.15	✔	✔			

*Material requirements may be verified by the submission of recent test certificates that confirm compliance. Any test certificates submitted need to provide traceability to material/formulation and manufacturer/site of manufacture. The Conformity Assessment Body reserves the right to independently verify compliance.

†Applicable to wall-mounted taps only.

A1

A6 Batch tests

'Not applicable'

COPYRIGHT

TABLE A2
BATCH TESTS

Clause No./Issue		Test method	Routine test frequency
Section 2 Materials			
2.2 to 2.6 Materials *†		Relevant Standards	Each batch or lot
Section 3 Design and manufacture			
3.2	End Connections	Relevant Standards	AS 1199.1 Insp. Level II
3.7	Thickness of metal body or head	Dimensional	AS 1199.1 Insp. Level II
3.11	Finish and workmanship	Inspection	AS 1199.1 Insp. Level II
3.13	Dimensions (where applicable)	Appendix O	AS 1199.1 Insp. Level II
Section 4 Performance requirements			
4.5	Watertightness under pressure	Appendix F	100% for cast bodies and concealed assemblies and for others AS 1199.1 inspection level II
A2 4.6	Nominal flow rate‡	Appendix G or R	Each batch or lot

* Critical materials used e.g., brass body, brass and plastics polymers.

† Tests, such as those for AS/NZS 4020, and tests for plastics may not be required for every batch; compliance of materials may be based on suppliers' certificates.

A2 ‡ Compliance may be based on supplier certificates for a WaterMark approved component or product that defines the nominal flow rate.

COPYRIGHT

APPENDIX B

LIST OF REFERENCED DOCUMENTS

(Normative)

AS

1167 Welding and brazing—Filler metals
1167.1 Part 1: Filler metal for brazing and braze welding

1199 Sampling procedures for inspection by attributes
1199.1 Part 1: Sampling schemes indexed by acceptance quality limit (AQL) for lot-by-lot inspection

1349 Bourdon tube pressure and vacuum gauges

1432 Copper tubes for plumbing, gasfitting and drainage applications

1565 Copper and copper alloys—Ingots and castings

1722 Pipe threads of Whitworth form
1722.1 Part 1: Sealing pipe threads
1722.2 Part 2: Fastening pipe threads

1769 Welded stainless steel tubes for plumbing applications

1834 Material for soldering
1834.1 Part 1: Solder alloys

1881 Zinc alloys—Casting ingots and castings—Quality requirements

2136 Method for detecting the susceptibility of copper and its alloys to stress corrosion cracking using the mercurous nitrate test

2345 Dezincification resistance of copper alloys

2738 Copper and copper alloys—Compositions and designations of refinery products, wrought products, ingots and castings

A2 2831 '**Not applicable**'

2837 Wrought alloy steels—Stainless steel bars and semi-finished products

3501 Parallel screw threads of Whitworth form (BSW and BSF) and associated gauges and gauging practice

3558 Methods of testing plastics and composite materials sanitary plumbing fixtures
3558.5 Method 5: Determination of degradation by ultraviolet light

3635 Unified (ISO inch) screw threads, associated gauges, and gauging practice

3688 Water supply—Copper and copper alloy body compression and capillary fittings and threaded-end connectors

AS/NZS

1567 Copper and copper alloys—Wrought rods, bars and sections

1568 Copper and copper alloys—Forging stock and forgings

1572 Copper and copper alloys—Seamless tubes for engineering purposes

2845 Water supply—Backflow prevention devices
2845.1 Part 1: Materials, design and performance requirements

3499 Flexible tube connectors for water supply

COPYRIGHT

AS/NZS	
3500	Plumbing and drainage
3500.0	Part 0: Glossary of terms
3500.4.2	Part 4.2: Hot water systems—Acceptable solutions
3662	Performance of showers for bathing
4020	Testing of products for use in contact with drinking water
6400	Water efficient products—Rating and labelling
HB18.28	Guidelines for third-party certification and accreditation—Guide 28—General rules for a model third-party certification system for products
NZS	
3501	Specification for copper tubes for water, gas and sanitation
NZ/BS	
1400	Specification for copper alloy ingots and copper alloy and high conductivity copper castings
ISO	
274	Copper tubes of circular section—Dimensions
ASTM	
A269	Standard Specification for Seamless and Welded Austentic Stainless Steel Tubing for General Service
A276	Specification for Stainless Steel Bars and Shapes
A286/ A286A	Standard Specification for Seamless and Welded Ferritic and Martensitic Stainless Steel Tubing for General Service
A313	Standard Specification for Stainless Steel Spring Wire
B127	Standard Specification for Nickel-Copper Alloy (UNS N04400) Plate, Sheet, and Strip
B163	Standard Specification for Seamless Nickel and Nickel Alloy Condenser and Heat-Exchanger Tubes
B164	Standard Specification for Nickel-Copper Alloy Rod, Bar, and Wire
B165	Standard Specification for Nickel-Copper Alloy (UNS N04400) Seamless Pipe and Tube
D395	Standard Test Methods for Rubber Property—Compression Set

COPYRIGHT

APPENDIX C

RESISTANCE OF PLASTIC-BODIED TAPS TO CHEMICAL DEGRADATION

(Normative)

C1 SCOPE

This Appendix sets out the requirements for resistance to chemical degradation for plastic-bodied taps.

C2 PRINCIPLE

Tap body samples are exposed to various chemical environments then inspected and subjected to a short-term endurance test. Individual samples are required for each exposure condition. Taps designed for applications where the design maximum temperature is other than up to 80°C, the tap or component is tested to an appropriate maximum temperature (°C) for the temperature rating of the tap or component. Where tested at an alternative temperature range, the temperature rating shall be clearly identified in accordance with Clause 1.5.

C3 APPARATUS

The following apparatus is required:

(a) A water bath capable of maintaining 95, +2, –0°C.

(b) A sealable container of sufficient capacity to hold the tap assembly.

(c) 0.4–0.5% weight for weight sodium hypochlorite solution.

(d) A temperature-controlled environment capable of maintaining 20, +2, –0°C.

C4 PROCEDURE

Tap assemblies shall be tested in the fully open position. Tap components shall be assembled with other components complying with the requirements of this Standard, as appropriate, and tested with the assembly in the fully open position.

The procedure shall be as follows:

(a) Expose individual samples to the following conditions and solutions:

  (i) *Sample 1* Fully immerse the sample in deionized water at 95, +2, –0°C for 1000, +20, –0 h.

  (ii) *Sample 2* Fully immerse the sample in 0.4–0.5% weight for weight sodium hypochlorite solution at 20, +2, –0°C. Exclude all air from the container and seal for 1000, +20, –0 h.

(b) On completion of exposure, subject each tap assembly to a short-term endurance test in accordance with Appendix L, except that only 3000, +50, –0 cycles shall be completed. Then subject the sample to the hydraulic strength of plastic-bodied tap assembly test in accordance with Clause 4.3 and the watertightness under pressure test in accordance with Clause 4.5

COPYRIGHT

C5 TEST REPORT

The following shall be reported:

(a) Model, manufacturer, type and size of tap or component(s).

(b) Any cracking, crazing or surface degradation visible to the naked eye.

(c) Results of the hydraulic strength of plastic-bodied tap assembly test.

(d) Results of the watertightness under pressure test.

(e) Compliance or non-compliance with the test criteria.

(f) Reference to this test method, i.e., Appendix C, AS/NZS 3718.

COPYRIGHT

APPENDIX D

HYDRAULIC STRENGTH TEST FOR TAP ASSEMBLIES

(Normative)

D1 SCOPE

This Appendix sets out the method for the hydrostatic strength testing of taps.

D2 PRINCIPLE

The tap is supported in a jig without any external force being applied. Hydraulic pressure is applied over a predetermined time period, entrapped air being bled off initially prior to testing. The tap is then tested in accordance with Appendix F and inspected for any leakage, and then dismantled and inspected for distortion, splitting or breakage.

D3 APPLICATION

Draw-off taps shall be tested with the tap in the closed position only. Delivery taps and hose taps shall be tested with the tap in the closed and open positions.

The test shall also be conducted to establish that fabricated joints are of sufficient strength.

D4 APPARATUS

D4.1 Pressurizing system

A hydraulic system capable of producing a test pressure of 3 +0.5, –0 MPa, without shock or pulsations. The pressurizing system shall be capable of maintaining the pressure should flow conditions occur during the test.

D4.2 Test rig

A rig to support the tap including its connection ends, so that no external force is applied to them.

D4.3 Test sample

Samples shall consist of outlets of delivery tap samples capable of being sealed by a suitable control valve, and outlets of draw-off tap samples, open to allow free discharge. It is permissible to strengthen the internal sealing device of the tap to minimize internal leakage. The body and head of taps shall not be strengthened.

D4.4 Pressure gauge

A pressure gauge complying with the requirements of AS 1349 and capable of indicating the required test pressure to within ±2% of the true value, or digital or analogue pressure gauges of equal accuracy. The pressure gauge shall be placed within 100 mm of the tap inlet and on the upstream side.

D4.5 Thermometer

A thermometer complying with AS 2831 and capable of indicating the required test temperature to within ±2% of the true value, or digital or analogue temperature gauges of equal accuracy.

D4.6 Timing device

A timing device capable of reading to 0.1 s, to measure the time interval from which the flow rate is calculated.

COPYRIGHT

D5 TESTING ENVIRONMENT

D5.1 Safety

Provision shall be made to protect the operator in the event of the tap failing the test.

D5.2 Metallic components of tap assemblies

For screw-down pattern taps where the body and the head are made entirely of metal shall be tested at ambient temperatures.

D5.3 Plastic components of metal-bodied tap assemblies

Metal-bodied taps with plastics components shall be tested with water at a temperature of 80 ±2°C. Prior to testing, metal-bodied taps with plastic components shall be conditioned for a period of 30 +10, –0 min either by placing the assembly in hot air at the specified temperature or by running hot water through it at the specified temperature.

Alternative conditioning environments may be used, provided that equal accuracy can be demonstrated.

D6 PROCEDURE

The procedure shall be as follows:

(a) Mount the tap in the test rig, connect inlet or inlets to the pressurizing system and bleed off any entrapped air. Condition the tap if applicable.

(b) Open the tap and run hot water at 80 ±2°C through it for a period of 30 min at a flow rate of not less than 2 L/min, except that taps marked cold water only shall be tested at 40 ±2°C. Where the manufacturer specifies a maximum operating temperature greater than 40°C, the test temperature shall be the maximum operating temperature.

(c) Measure the water temperature at a point 100 mm upstream from the tap connection (to check on flow-through temperature).

(d) Close the tap and apply a pressure of 3 +0.1 –0 MPa and hold this pressure for 60 +5, –0 min. Where the manufacturer specifies a maximum operating pressure, the test pressure shall be twice the maximum operating pressure. During this period the tap should be allowed to cool down.

A1 Seepage through the tap shut-off mechanism is permitted provided the pressure is maintained.

(e) For plastic-bodied taps, carry out Steps (b) to (d) 10 times.

(f) Remove the tap from the test rig, and retest in accordance with Appendix F. Note any leakage.

(g) Dismantle the tap and visually inspect the body and head for splitting, distortion, cracking and breakage.

D7 TEST REPORT

The following shall be reported:

(a) Model, manufacturer, type and size of the tap.

(b) Test pressure and the test temperature.

(c) All leakage observed at each step in the test.

A1 (d) Result of retesting for watertightness in accordance with Appendix F.

(e) Any splitting, distortion, cracking, breakage or other failure.

(f) Compliance or non-compliance with the test criteria.

(g) Reference to this test method, i.e., Appendix D, AS/NZS 3718.

COPYRIGHT

A1, A2

APPENDIX E

SURFACE-MOUNTING STRENGTH TEST FOR TAPS

(Normative)

E1 SCOPE

This Appendix sets out the method to assess the strength of tap-mounting components to resist damage when subjected to a test load.

E2 PRINCIPLE

The tap body or assembly is securely fixed in accordance with the manufacturer's designated fitment instructions into the test jig. An adaptor is fitted to allow a tensile load to be applied along the axis and at right angles to the mounting plane.

E3 APPARATUS

The following apparatus is required:

(a) A rigid mounting plate 10 ±2 mm thick, designed to accept the normal fixing method for the tap under test. The bore in the mounting plate shall be the maximum opening size as specified by the manufacturer in their installation instructions.

(b) An adaptor to fit into or onto the tap body for the application of the axial test force.

(c) A hot water supply capable of producing a constant supply of heated water according to Paragraph E4(b) for the duration of the test.

E4 PROCEDURE

The procedure shall be as follows:

(a) Securely fix the body of the tap under test onto the mounting plate in accordance with the manufacturer's designated fitting instructions. If the manufacturer does not provide instructions for mounting or tightening of backnuts or screws, these shall be tightened to 5–10 Nm for test purposes only.

Taps with plastic bodies or plastic mounting components shall be conditioned with running water at 80 ±2°C through the tap, or the maximum operating temperature where the manufacturer specifies a maximum operating temperature greater than 40°C. The temperature shall be stabilized to the test temperature of 80 ±2°C, or the maximum operating temperature specified by the manufacturer, whichever is the lesser, as recorded at the test body inlet and maintained for a minimum period of 60 s before stopping water flow.

(b) Attach a suitable device to apply a static tensile load of 500 +50, –0 N axially to the tap body for a minimum of 60 s.

NOTE: Non-loadbearing components, such as handles, outlets, tap heads or other components, may be removed to facilitate the application of the test load.

(c) Remove the load and prior to removal of the tap under test inspect the mounting assembly for security of mounting.

(d) Remove the components and examine for cracking, deformation, stripping of threads, unsecured mounting, any damage identified as a failure, or any other damage resulting in faliure.

(e) Test for leakage in accordance with Appendix F.

COPYRIGHT

A2

E5 TEST REPORT

The following shall be reported:

(a) Model, manufacturer, type and size of tap.

(b) Tensile force applied and duration.

(c) Any cracking, deformation, stripping of threads, unsecure mounting or other failure.

(d) Results of retesting in accordance with Appendix F.

(e) Reference to this test method, i.e., Appendix E, AS/NZS 3718.

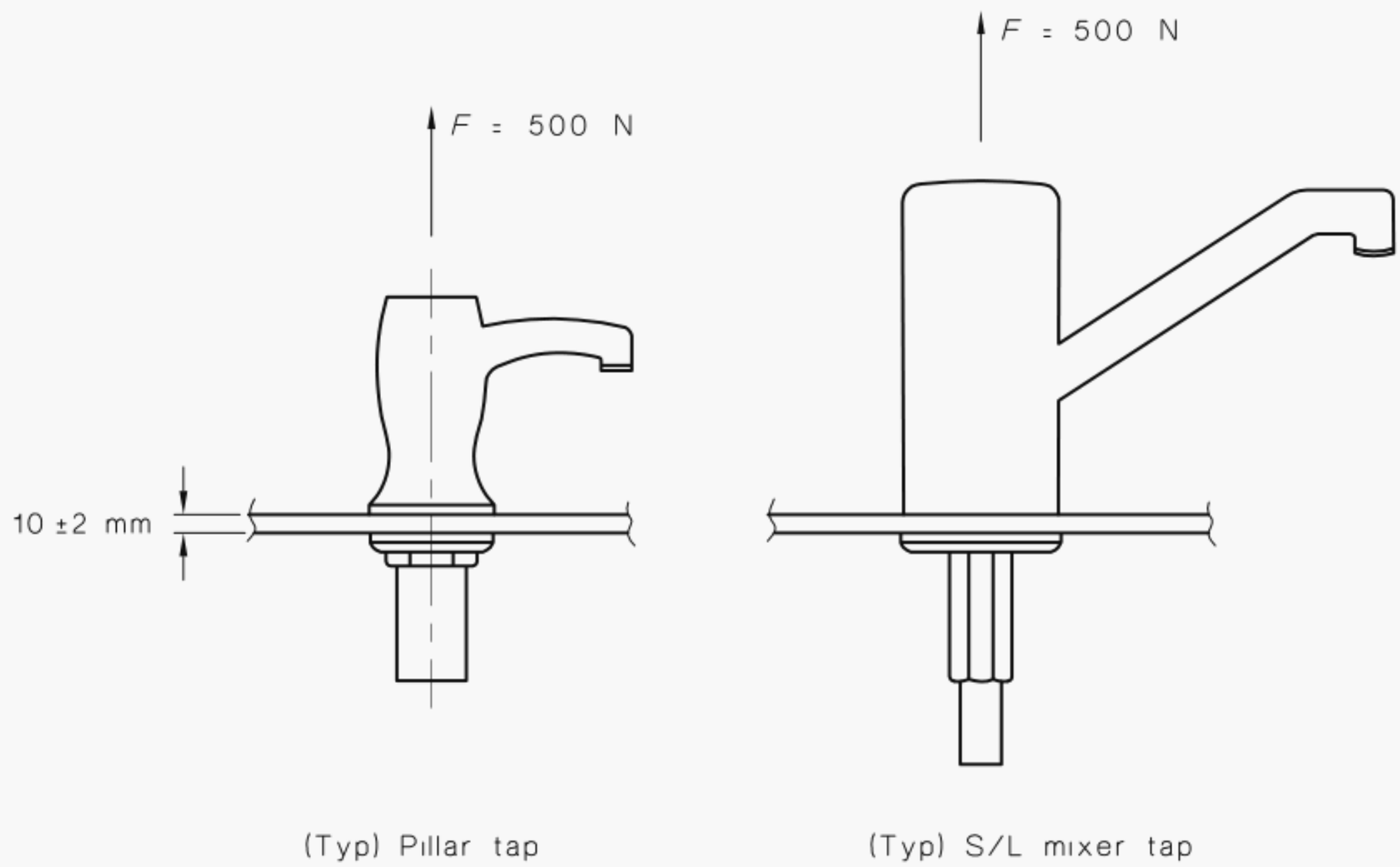

FIGURE E1 LOAD TEST SCHEMATIC

COPYRIGHT

APPENDIX F

DETERMINATION OF WATERTIGHTNESS

(Normative)

F1 SCOPE

This Appendix sets out two methods for testing assembled taps for leakage through the tap assembly. The methods are as follows:

(a) Hydrostatic pressure test at not less than 2 MPa, except where the manufacturer specifies a maximum operating pressure the test pressure to be not less than 1.5 times the maximum operating pressure.

(b) Pneumatic pressure test at not less than 700 kPa.

NOTE: An alternative test method may be permitted by the Conformity Assessment Body subject to such test demonstrating equal effectiveness.

F2 PRINCIPLE

The tap is held in a test rig and hydraulic pressure is applied over a predetermined time period, entrapped air being bled off prior to testing (see Note).

NOTE: Alternative procedures using pneumatic pressure to tap and jig assembly submerged in water may be used. The tap is then inspected for cracks, leakage or other failure.

F3 APPARATUS

F3.1 Pressurizing system

Pressurizing system capable of producing the specified test pressure without shock or pulsations. A hydraulic accumulator or pump may be used for this purpose.

The hydrostatic pressure test shall be conducted with water and the system shall be capable of providing the required pressure under no-flow conditions.

The pneumatic pressure test shall be conducted with compressed air and the system shall be capable of providing the required pressure under no-flow conditions.

F3.2 End connections

Tap connected to the pressurizing system, supported and held in a suitable jig.

Connection to the tap inlet and plugging of the tap outlet shall be made by threaded or compression ends, or by means of a suitable elastomeric sealing medium set in a supporting mechanism, plate or plugs located against or around the connection end or into a socket. For a capillary connection end complying with AS 3688, the sealing medium on a plug inserted within the capillary socket shall be at a depth not greater than 25% of the total socket length. The pressurizing unit shall be connected to the inlet of the tap, and each tap of a combined tap shall be tested in a way that establishes the integrity of each tap.

External clamping forces may be applied to the fitting to hold the tap against the connection sealing mechanism. Adequate guarding shall be provided to protect the tester.

For the pneumatic test, provision shall be made to submerge the fitting into a water bath.

For draw-off taps, the tap outlet shall allow free discharge. For delivery taps and hose taps, the tap outlet connection shall have a flow-control valve to allow free discharge or stop the flow against the pressurizing system. For the hydrostatic test, the free discharge shall be to atmosphere and readily seen. For the pneumatic test, the free discharge shall be required to bubble through the water bath.

COPYRIGHT

F3.3 Pressure gauge

A pressure gauge complying with the requirements of AS 1349 for industrial gauges and capable of indicating the required test pressure to within ±2% of the true value.

NOTE: Digital or analogue pressure gauges with equivalent or better accuracies may be used.

F4 PROCEDURE

F4.1 Hydrostatic test

The procedure shall be as follows:

(a) Mount the tap in a suitable test jig and connect inlets or outlets to the pressurizing system.

(b) Open tap and flow-control valve, if applicable, allow water to run and discharge freely to atmosphere and remove air. Ensure that the outside of the fitting is free of drops or globules of water.

(c) Proceed as follows:

(i) *For draw-off taps,* close the tap (outlet free to discharge) and pressurize the tap at its inlet to the test pressure. Observe for sealing of the inlet connection and maintain the pressure for 10 s to 25 s.

(ii) *For in-line taps and hose taps,* open the tap and close the flow-control valve on the outlet and pressurize the entire tap assembly to the test pressure. Observe for sealing of end connections and hold pressure for 10 s to 25 s.

A1 With the pressure still maintained to the tap inlet, shut the tap and open the flow-control valve. Maintain the pressure on the tap inlet for 10 s to 25 s.

(iii) *For plastic-bodied taps,* use either Step (i) or Step (ii) configuration, and maintain the pressure for 15 +5, –0 min at 60 +5, –0°C.

NOTES:

1 A suitable test environment may be established by placing the assembly in hot air at the specified temperature or running hot water through the tap at the specified temperature.

2 The sequence of application of the pressure may be changed provided that an equivalent test occurs.

(d) While the pressure is being maintained, observe for leakage through the body of the tap.

F4.2 Pneumatic test

The procedure shall be as follows:

(a) Mount the tap in a suitable test jig and submerge the fitting and jig into a water bath. The tap shall not contain any water.

(b) Proceed as follows:

(i) *For draw-off taps*, close the tap (outlet free to discharge) and pressurize the tap at its inlet end with compressed air to the specified pressure. Observe for sealing of connections and maintain the pressure for 5 s to 15 s.

(ii) *For delivery taps and hose taps*, open the tap and close the flow-control valve and pressurize the tap at its inlet end with compressed air. Observe for sealing of the inlet connection and maintain the pressure for 5 s to 15 s.

With the pressure still maintained to the tap inlet, close the tap and open the flow-control valve. Maintain the pressure on the tap inlet for 5 s to 15 s.

COPYRIGHT

(c) While the pressure is being maintained, observe for leakage through the body of the tap.

F5 TEST REPORT

The following shall be reported:

(a) Manufacturer, model, type and size of the tap.

(b) Test pressure applied to tap and the test method used.

(c) Any visible splits, cracks, leakage or other failure of the tap.

(d) Compliance or non-compliance with the criteria specified.

(e) Reference to this test method, i.e., Appendix F, AS/NZS 3718.

COPYRIGHT

APPENDIX G

A2

DETERMINATION OF THE NOMINAL FLOW RATE OF TAPS AND TAP OUTLETS FOR USE WITH HIGH PRESSURE

(Normative)

G1 GENERAL

A2 This Appendix sets out the method for determining the flow rates through taps and tap outlets for use with high pressure.

This test method shall be used as a basis for rating water efficiency of taps and tap outlets in AS/NZS 6400.

Where a tap (tap and/or tap outlet, or mixer tap) is supplied with an aerator or outlet device, the nominal flow rate shall be measured with the tap and tap outlet in the fully open position providing maximum flow.

G2 PRINCIPLE

The test sample to be tested is supported in a test rig and water is passed through the test sample at dynamic flow pressures of 150 kPa, 250 kPa, 350 kPa and 500 kPa; when the flow rate has stabilized it is recorded at each of these pressures.

G3 APPARATUS

The following apparatus is required:

(a) A water supply capable of delivering the required volumes at a temperature of 20 ±5°C and at a dynamic flow pressure of at least 500 kPa.

(b) Test apparatus made from Type B copper tube of diameter equal to the inlet size of the tap. The branch for flow pressure measurements shall be located at least 250 mm downstream of any valve or fitting. The tap outlet, mixer tap, or flow controller connection(s) shall be not more than 300 mm downstream of the flow pressure measurements.

(c) Pressure gauge having an accuracy of ±2% of the true value.

(d) Flow meter having an accuracy of ±2% of the true value.

NOTE: See Figure G1 for a typical test arrangement.

G4 PROCEDURE

The procedure shall be as follows:

(a) Mount the test sample (tap and/or tap outlet, or mixer tap) in the test rig with the inlet(s) connected to the water supply in accordance with the product manufacturer's intended method of installation.

(b) The test sample operating mechanism or mechanisms or actuating valve(s) shall be adjusted to achieve the maximum flow at the outlet.

(c) Condition the test sample by allowing the water to flow through and then adjust the control valve gradually until the dynamic flow pressure of 500 kPa is achieved for at least 1 min.

(d) Gradually adjust the control valve to turn off the flow of water.

COPYRIGHT

(e) Gradually adjust the control valve until the dynamic flow pressure of 150 kPa is achieved, allowing the flow and pressure to stabilize.

(f) Observe the flow meter and record the flow rate at that dynamic flow pressure.

(g) Repeat Steps (e) and (f) with the dynamic flow pressure increased to 250 kPa, 350 kPa and then to 500 kPa.

(h) Gradually adjust the control valve to turn off the flow of water.

(i) Repeat Steps (e) to (g) to obtain a second reading of the flow rates at the range of pressures.

(j) Calculate and record the average flow rates at each of the following dynamic pressures:

(i) 150 kPa.

(ii) 250 kPa.

(iii) 350 kPa.

(iv) 500 kPa.

(k) Calculate the mean of the average flow rates obtained in Step (j) (i) to (j) (iii), and record this value as the nominal flow rate.

(l) From the averages obtained in Step (j) (i) to (j) (iii), record the highest and lowest average flow rates.

(m) Calculate and record the maximum differences between the highest and lowest average flow rates at Step (l).

NOTE: AS/NZS 6400 specifies that the maximum difference between the highest and lowest average flow rates is not to exceed 2.0 L/min.

G5 TEST REPORT

The following shall be reported:

(a) Manufacturer, brand name, model name and model number (if these are applicable) of the test sample (tap and/or tap outlet, or mixer tap).

(b) The flow rates (in litres per minute) through the test sample, at the dynamic flow pressures of—

(i) 150 kPa;

(ii) 250 kPa;

(iii) 350 kPa; and

(iv) 500 kPa.

NOTE: The average flow rates as determined at Step (j) of Paragraph G4.

(c) The nominal flow rate.

NOTE: As determined at Step (k) of Paragraph G4.

(d) The difference between the highest and lowest average flow rates as determined at Step (m) of Paragraph G4.

NOTE: Although the tap is conditioned to 500 kPa, the recording of the average flow rate at that pressure is for data collecting purposes only.

A2 (e) Compliance with Clause 4.6.2.1(b) for maximum average flow rate.

(f) Compliance with Clause 4.6.2.1(c) for minimum average flow rate.

(g) Product nominated for use with high pressure as defined in this Standard.

A2 (h) Reference to this test method, i.e., AS/NZS 3718, Appendix G.

COPYRIGHT

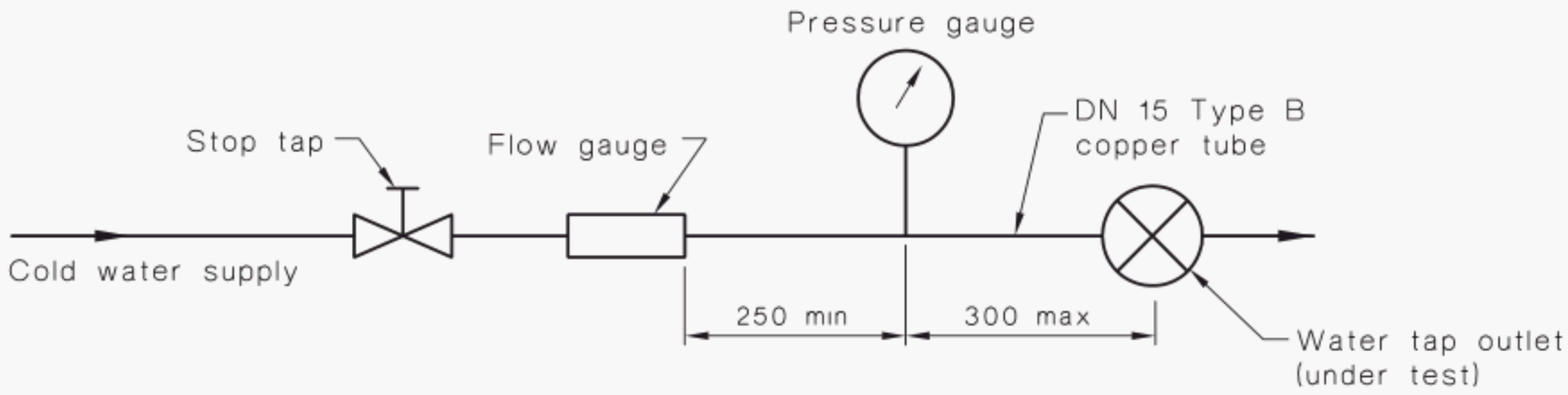

DIMENSIONS IN MILLIMETRES

FIGURE G1 TYPICAL TEST ARRANGEMENT

COPYRIGHT

APPENDIX H

TORQUE TEST FOR FABRICATED ASSEMBLIES

(Normative)

H1 SCOPE

This Appendix sets out the method for torque testing the joints of fabricated assemblies. It measures the strength of fabricated joints that require a torsional force to ensure a seal during installation.

H2 PRINCIPLE

The fabricated tap assembly is held by one side in a test rig and a predetermined torque is applied to the opposite joint. The tap assembly is then inspected for cracks and distortion in the fabricated joint.

H3 APPARATUS

The following apparatus is required:

(a) A fixing jig to hold the assembly firmly.

(b) A torque wrench of ±5% accuracy. Alternatively, a lever arm may be used with a known force applied at its end at 90 ±5° to the radius between the point of application of the force to the lever and the centre of rotation. This lever arm method used shall be of at least the same accuracy as the torque wrench.

NOTE: Torque (in newton metres) = force (in newtons) × radius (in metres).

H4 PROCEDURE

The procedure shall be as follows:

(a) Mount the assembly into a fixing jig that is designed to hold one side of the fabricated joint firmly.

(b) Apply the torque specified in Table H1 to the other side of the fabricated joint.

(c) Maintain the torque for 10 s to 20 s.

(d) Remove the torque and repeat Steps (a), (b), and (c) on all other fabricated joints (if any).

(e) Then test for leakage in accordance with Appendix F.

(f) Remove the assembly from the jig and inspect nut components for cracking, breakage and thread damage.

COPYRIGHT

TABLE H1

TORQUE LOADINGS FOR FABRICATED TAP BODIES AND ASSEMBLIES

Inlet size of tap, DN	Torque Nm	
6	40	+ 5,–0
8	40	
10	40	
15	60	
20	85	
25	120	
32	150	
40	185	
50	215	

H5 TEST REPORT

The following shall be reported:

(a) Manufacturer, model, type and size of the tap.

(b) Torque applied, then test for leakage in accordance with Appendix F.

(c) Any splitting, cracking, thread damage, leaks or other failure.

(d) Compliance or non-compliance with criteria specified.

(e) Reference to this test method, i.e., Appendix H, AS/NZS 3718.

COPYRIGHT

APPENDIX I

TORQUE TEST FOR HANDLE AND HANDLE ATTACHMENT

(Normative)

I1 SCOPE

This Appendix sets out the method for torque testing the handle and handle attachment to the spindle of the tap. It measures the ability of the handle, and the attachment of it to the spindle, to withstand operating torques encountered in normal operation.

This test is not required for mixing taps mechanical (non-thermostatic).

I2 PRINCIPLE

The tap with its valve fully closed is held in a test rig. A predetermined torque is applied to the handle in the closing direction. The handle and its attachment are then inspected for cracking or stripping of thread.

I3 APPLICATION

The test applies to taps that are operated with a rotary motion and have either a handle or lever.

The test shall be conducted with the operating handle or lever attached. If different styles of handles are available, the test shall also be conducted with each handle style.

I4 APPARATUS

The following apparatus is required:

(a) A fixing jig to hold the tap firmly.

(b) An arrangement to apply the torque to the operating mechanism. This can be either a torque wrench that is capable of applying the required torque with an accuracy of ±5%, or a lever arm with a force applied at its end at 90 ±5° to the radii between the centre of rotation and the centre of application of the force and within 10 mm of the outer extremity of the handle. The lever arm method used shall be of at least the same accuracy as for the torque wrench.

The connection from the torque wrench or lever to the handle may be by means of a suitable claw or claws that straddle the handle and apply the torque directly to the handle within 10 mm of its outer extremity.

NOTE: Torque (in newton metres) = force (in newtons) × radius (in metres).

I5 PROCEDURE

If the tap is the screw-down pattern type, replace the valve washer of the tap with a metal washer. If it is not a screw-down pattern type, the test shall be done by taking the spindle out of the tap and gripping the spindle and conducting a test on handle and spindle.

The procedure shall be as follows:

(a) Mount the assembled tap with handle, into the fixing jig.

(b) From Table I1, determine the torque that has to be applied to the handle.

(c) Apply the torque to the closed tap in the direction required to close the tap.

(d) Maintain the torque for 30 s to 50 s.

COPYRIGHT

(e) Remove the tap assembly from the fixing jig.

(f) Remove the handle and inspect all components for cracking, breaking, and damage.

TABLE I1

TORQUE LOADINGS FOR HANDLE AND HANDLE ATTACHMENT

Inlet size of tap, DN	Torque Nm	
6	12	+ 2,–0
8	12	
10	12	
15	12	
20	15	
25	20	
32	25	
40	35	
50	40	

I6 TEST REPORT

The following shall be reported:

(a) Manufacturer, model, type and size of the tap.

(b) Handle type and style.

(c) Torque applied.

(d) Any cracking, breaking, stripping of thread or other failure.

(e) Compliance or non-compliance with criteria specified.

(f) Reference to this test method, i.e., Appendix I, AS/NZS 3718.

COPYRIGHT

APPENDIX J

TORQUE TEST FOR HEAD-TO-BODY CONNECTION

(Normative)

J1 SCOPE

This Appendix sets out the method for torque testing the head-to-body connection of a tap assembly. It measures the strength of the head-to-body connection. The connection may be a threaded connection or a connection by screws.

J2 PRINCIPLE

The tap body is held in a test rig. A predetermined torque is applied to the head assembly. The tap is then inspected for distortion or stripping of thread.

J3 APPARATUS

The following apparatus is required:

(a) A fixing jig to hold the tap body firmly.

(b) A mechanism to apply the torque to the head joint. This can be either a torque wrench that is capable of applying the required torque and has an accuracy of ±5%, or a lever arm to which a known force can be applied at a minimum radius of 300 mm. The lever arm method used shall be of at least the same accuracy as the torque wrench.

NOTE: Torque (in newton metres) = force (in newtons) × radius (in metres).

J4 PROCEDURE

The procedure shall be as follows:

(a) Mount the assembled tap into the fixing jig.

(b) Apply the torque to the head component in accordance with Table J1.

(c) Maintain the torque for 10 s to 20 s.

(d) Remove the torque and repeat Steps (b) and (c) on all other threaded components (if any) forming part of the head-to-body connection.

(e) Dismantle the tap and inspect components for cracking, breakage, and thread damage.

TABLE J1

HEAD TO BODY TORQUE LOADING

Inlet size of tap, DN	Torque Nm	
6	25	+ 1,–0
8	25	
10	25	
15	25	
20	30	
25	40	
32	50	
40	70	
50	80	

COPYRIGHT

J5 TEST REPORT

The following shall be reported:

(a) Manufacturer, model, type and size of the tap.

(b) Torque applied.

(c) Any damage to internal components, stripping of mating threads or damage to wrenching flats or other failure.

(d) Compliance or non-compliance with criteria specified.

(e) Reference to this test method, i.e., Appendix J, AS/NZS 3718.

COPYRIGHT

APPENDIX K

TORQUE TEST FOR OPERATING MECHANISM OF TAP

(Normative)

K1 SCOPE

This Appendix sets out the method for torque testing the entire operating mechanism of a tap. It measures the ability of the tap to withstand the operating torques and loads that can be expected to be encountered in service.

K2 PRINCIPLE

The tap with its valve fully closed is held in a test rig. A predetermined torque is applied to the handle in the closing direction. The valve is then fully opened and the same procedure is repeated in the opposite direction. The tap is then inspected for cracking or damage.

K3 APPLICATION

The test excludes button-operated, sensor-operated and foot-operated taps. The rotary motion may be for part of a rotation or many rotations.

The test torques are dependent on the design of the tap and shall be as specified in Table K1. The tests shall be carried out with the operating handle or lever attached.

K4 APPARATUS

The following apparatus is required:

(a) A fixing jig to hold the tap firmly.

(b) A mechanism to apply the torque to the operating mechanism in both directions of ON and OFF operation. This may be either a torque wrench that is capable of applying the required torque with an accuracy of ±5%, or a lever arm to which a known force can be applied at a minimum radius of 300 mm. The lever arm method used shall be of at least the same accuracy as the torque wrench. The connection from the torque wrench or lever to the handle shall be made with a suitable clamp or claw that straddles the handle to apply the torque directly to within 10 mm of the extremity of the handle.

(c) As an alternative to Item (b), a mechanism may be used to apply a force of 150 ±7 N to within 10 mm of the outer extremity of the handle of the tap. This force shall be applied both in line with and at right angles to the axis of the spindle of the tap. The force shall be achieved by a weight or device within ±5% of the true value. The use of a claw over the handle but only bearing against the outer 10 mm of the handle is permitted. Material may be removed or added at the outer extremity of the handle to allow the application of the force.

NOTE: Torque (in newton metres) = force (in newtons) × radius (in metres).

K5 PROCEDURE

The procedure shall be as follows:

(a) Mount the assembled tap into the fixing jig with the tap in the fully closed position.

(b) Apply torque (see Paragraph K4) as specified in Table K1 in the direction required to close the tap. Maintain for 30 +20, –0 s.

COPYRIGHT

(c) Repeat Step (b) with the tap in the fully open position and the torque applied in the direction required to open the tap.

For mixing taps mechanical (non-thermostatic) this test shall be repeated by applying a torque to the handle at the end of movement in the hot and cold and off and on stop positions.

(d) Remove from the jig, dismantle the tap and inspect all components for cracking, bending, breaking, and damage.

TABLE K1

TORQUE LOADINGS FOR THE OPERATING MECHANISM OF TAPS

A2

Inlet size of tap DN	Torque, Nm			
	Screw-down pattern taps including alternate head assemblies		Other taps (e.g., mixer taps)	
6	12	+ 1, – 0	8	+ 1, – 0
8	12		8	
10	12		8	
15	12		8	
20	15		10	
25	20		14	
32	25		17	
40	35		23	
50	40		26	

K6 TEST REPORT

The following shall be reported:

(a) Manufacturer, model, type and size of the tap.

(b) Details of the handle.

(c) Torque or force applied, and directions applied.

(d) Any cracking, bending, or other failure.

(e) Compliance or non-compliance of criteria specified.

(f) Reference to this test method, i.e., Appendix K, AS/NZS 3718.

COPYRIGHT

APPENDIX L

ENDURANCE TEST FOR TAPS AND COMPONENTS

(Normative)

L1 SCOPE

This Appendix sets out the method by which taps or components of all types are tested for the endurance. The test measures the ability of taps, valves and flow controllers to operate satisfactorily with normal opening and closing operations on hot and cold applications during the expected life of the tap.

Where an outlet is not of unit construction with the tap, it need not be tested under this Appendix.

L2 PRINCIPLE

The tap is held in a test rig and connected to a temperature-controlled hot and cold water supply at a given pressure. A cyclic mechanism to fully open and close the tap at a predetermined torque within a given time period is connected to the operating mechanism. A device to monitor the system for inconsistencies and breakdown is integrated into the mechanism. The tap or jumper valves are inspected for adjustment, wear or replacement during the test.

L3 APPLICATION

To simulate temperature changes that occur in actual operation, the tap is also subjected to alternate supplies of hot and cold water every 55 ±5 cycles.

Mixing taps (mechanical) shall have the supplies so arranged that during testing both hot and cold water inlets of the mixing tap under test have hot water and cold water supplied to them alternately for 55 ±5 cycles.

L4 APPARATUS

L4.1 Test rig

A test rig fitted with a counter to count complete cycles, and capable of the following performance:

(a) Operating the tap through its complete operating sequence and limits of open, temperature selection and closing movements.

(b) Fully opening and closing the tap over the full extent of the tap's operating limits.

(c) Where an operating torque is required to operate the tap, applying a torque to the operating mechanism of the tap in the closing direction as specified in Table L1. For tap ware incorporating operating mechanisms of other types, simulating the normal operation.

(d) Rotating the spindle or handle at a speed that allows both of the following closing and opening times:

(i) Screw-down pattern taps.....0.5 +5, –0 s.

(ii) Other taps.....0.5 +1, –0 s.

COPYRIGHT

Means shall be provided to physically verify the torque applied and the speed of operation. The method used shall have an accuracy of ±10% for both the torque and the speed of operation. For tap ware incorporating operating mechanisms of other types the test rig shall simulate the normal operation.

TABLE L1

TORQUE TO BE APPLIED FOR ENDURANCE TEST

Inlet size of tap, DN	Torque Nm	
6	2.5	±0.5
8	2.5	
10	2.5	
15	2.5	
20	2.5	
25	3.0	
32	3.0	
40	3.5	
50	4.0	
Lever taps	20N (force)	

NOTES:

1 The torque loading is to be applied and set with the activating mechanism of the rig in a stationary position at the fully closed position.

2 Force to be applied 50 mm from outer end.

L4.2 Water supply system

The heated water test temperatures shall be—

(a) 80 ±3°C for taps for the hot water supply system;

(b) 40±3°C for taps designed for use in cold water services only; or

(c) the maximum operating temperature where the manufacturer specifies a maximum operating temperature greater than 40°C; and

The cold water test temperature shall be the supply temperature.

The water temperature shall be measured within the range 0 mm to 100 mm upstream of the tap's inlet connection. For the purpose of this measurement, the hot water temperature shall be the temperature of the water when the flow finishes during the third cycle.

The system shall be capable of supplying water to the tap at a static pressure of 400 ±20 kPa and at a pressure during flow conditions sufficient to give a flow rate not less than the nominal flow rating of the tap or 30 L/min, whichever is the lesser.

L4.3 Measurement of pressure

The measurement of pressure shall be performed with pressure gauges complying with AS 1349 and having an accuracy of ±2%. Alternative equipment having equal or greater accuracy may be used.

L4.4 Measurement of temperature

Thermometers used to measure temperature shall comply with AS 2831 and shall be capable of indicating the required test temperature to within ±2% of its true value. Alternative equipment of equal accuracy may be used.

COPYRIGHT

L4.5 Timing and control equipment

Timing and control equipment to achieve the following complete cycle is required:

(a) Tap opens.

(b) Tap remains open for a period of 1 +5, –0 s.

(c) Tap fully closes.

(d) Tap remains fully closed for 2 +5, –0 s.

During each cycle, the tap shall be supplied with water from either the hot supply or the cold supply. After every 55 ±5 cycles, the supply shall be switched from being cold to hot and vice versa.

For time/volume taps, the opening and closing times may be operated though the minimum prescribed setting.

L4.6 Monitors

The apparatus may be provided with continuous monitoring equipment that causes the tests to be stopped if the parameters and limits are not being met. The apparatus may then be repaired or reset and the test continued from where it was stopped.

If a manual system of monitoring the system's performance is used, one or other of the following actions shall be taken when it is found that the equipment is outside the set limits:

(a) The test shall be abandoned and recommenced with a new tap.

(b) The equipment shall be repaired and reset and the cycles continued. All the cycles between the time of detection of the fault and the recorded cycle count at the last check when the equipment was operating correctly shall be added to the required number of cycles.

L4.7 Temperature of measurement

All measurements shall be taken at ambient temperature.

L5 PROCEDURE

The procedure shall be as follows:

(a) Connect the tap assembly to the test rig.

(b) Adjust the supply pressures with each water supply and check that the flow rates in the open position are not less than the specified nominal flow rates for the tap under test. Check that the supply water temperatures are as specified.

(c) Commence the opening and closing operations of the taps, and set so that the tap mechanism opens to at least 90% of fully open and that the torque and opening and closing times are in accordance with Paragraph L4.1.

(d) Reset the cycle counter to zero.

(e) Commence the cycles with water supplied from either the cold source or the hot source, but not both simultaneously.

(f) Continue cycles and change the water supply after every 55 ±5 cycles. Regularly check that the prescribed limits are being met throughout the test and also that the tap shuts off water when closed. The rig may be turned off to perform this test. Record the results and the number of cycles at which these checks occur. The washer shall be replaced on screw down pattern taps immediately the tap is found not to shut off water. A tap washer may only be replaced once during an endurance test. A second failure will invalidate the test. For other taps, abort the test as the tap fails.

COPYRIGHT

(g) Except for isolating and drain taps, after each 25 000 +10 000, –5 000 cycles, stop the cycling test and perform the hot water shut-off test as follows:

(i) Set the rig to supply hot water only.

(ii) Open the tap for 5 +1, –0 min.

(iii) Close the tap with the torque specified in Table L1.

(iv) Disengage or neutralize the spindle operating mechanism within the next 1 min.

(v) Check that the supply pressure is 400 +20, –0 kPa.

(vi) Leave the tap to cool in the specified ambient conditions for 30 +5, –0 min.

(vii) On the completion of the cooling down period, observe the tap, tap washer or sealing device closely for leakage for a further 5 +2, –0 min.

(h) On the completion of the hot water shut-off test, recommence the cycling test from Step (f).

(i) At the completion of the prescribed number of cycles (see Clause 4.12.1.3), check the equipment for compliance with the parameters and limits of this test.

(j) Remove the tap assembly and carry out the watertightness test of Appendix F.

No repairs or part replacements shall be carried out before the final watertightness test and hot water shut-off test. For screw-down pattern taps for which the washer may be replaced provided that no washers have been replaced during the cycling test. The gland may be adjusted provided that no adjustments have occurred during the cycling test.

L6 TEST REPORT

The following shall be reported:

(a) Manufacturer, model, size, and type of the tap.

(b) Number of cycles completed.

A1 (c) Result of the hot water shut-off test and result of retesting for watertightness in accordance with Appendix F.

(d) The nature of tap adjustment and replacements, and when they occurred during the test.

(e) Equipment adjustments and problems experienced during the test.

(f) Compliance or non-compliance of criteria specified.

(g) Reference to this test method, i.e., Appendix L, AS/NZS 3718.

COPYRIGHT

APPENDIX M

STRENGTH TEST FOR CONNECTOR NUTS AND ASSEMBLY

(Normative)

M1 SCOPE

This Appendix sets out the method for torque testing connector nuts on assemblies. It measures the strength of the nut and assembly.

M2 PRINCIPLE

The assembly is held on one side in a test rig and a predetermined torque is applied to the nut and assembly. The nut and assembly is then inspected for cracks or other failure.

M3 APPARATUS

The following apparatus is required:

(a) A hot water supply capable of producing a constant supply of hot water, at the test temperature, for the duration of the test.

(b) A fixing jig to hold one side of the assembly firmly at the opposing connection end.

(c) A torque wrench with accuracy within ±5%.

OR

Alternatively, a lever arm may be used with a known force applied at its end at 90 ±5° to the radius between the centre of rotation and the centre point of application of the force. The lever arm method used shall be of at least the same accuracy as that for the torque wrench.

TABLE M1

TORQUE LOADINGS FOR NUTS AND ASSEMBLIES

Inlet size DN	Torque Nm	
6	12	+5%,–0%
8	12	
10	16	
15	30	
18	40	
20	40	
25	60	
32	80	
40	100	
50	120	

M4 PROCEDURE

During testing, the threaded section of the component under test shall not be supported in any way as to influence the results of the test. The torque loading shall be applied to the nut in the same manner as normally applied in field conditions.

COPYRIGHT

The heated water test temperatures shall be as follows:

(a) 80 ±2°C for taps for the hot water supply system.

(b) 40±2°C for taps designed for use in cold water services only.

(c) The maximum operating temperature where the manufacturer specifies a maximum operating temperature greater than 40 C.

The procedure shall be as follows:

(i) Mount the assembly into a fixing jig that is designed to hold one side of the assembly firmly.

(ii) With the water supply connected to the nut assembly under test and with the nut to be tested hand tightened, turn on the hot water supply. When the temperature has been stabilized to the test temperature and maintained for a minimum period of 60 s, apply within 5 s, the torque and maintain the applied force for a period of 10 s to 20 s.

(iii) Remove the torque and repeat Steps (a), (b) and (c) on the other nuts (if any).

(iv) Remove the assembly from the jig and inspect all components for cracking, breakage or thread damage.

M5 TEST REPORT

The following shall be reported:

(a) Model, manufacturer, type, and size of the assembly.

(b) Torque applied.

(c) Any splitting, cracking, distortion or thread damage or other failures.

(d) Compliance or non-compliance with the test criteria.

(e) Reference to this test method, i.e., Appendix M, AS/NZS 3718.

COPYRIGHT

APPENDIX N

LOAD TEST FOR BUTTON-OPERATED AND FOOT-OPERATED TAPS

(Normative)

N1 SCOPE

This Appendix sets out the method of load testing the operating mechanism of button-operated and foot-operated taps. The method is applicable to the following range:

(a) Button-operated taps.....250 N.

(b) Foot-operated taps .....1200 N.

N2 PRINCIPLE

The footpad, kneepad or button-operated tap is held in a rig with a mechanism to apply a predetermined force over a given time. The tap is then inspected for breakage, bending or other damage.

N3 APPARATUS

A mechanism is required to apply the force to the button or the foot-operated mechanism. The force shall be achieved by a weight or device within ±2% of the true value.

For button-operated tap and knee pad a force of 250 ±5 N shall be applied to the button. The force shall be spread evenly over the button and shall be applied in line with the direction of travel. The force may be applied with a contour arrangement.

For foot-operated taps, a force of 1200 ±20 N shall be applied to the foot-operating mechanism. The force shall be applied in the direction of the lever. The force may be applied with a contour device.

N4 PROCEDURE

The procedure shall be as follows:

(a) Set up the loading arrangement to allow the force to be applied in accordance with the tap type.

(b) Apply the force and maintain for 30 +20, –0 s.

(c) Remove force.

(d) Dismantle the tap assembly and inspect all components for cracking, breakage, bending, and damage.

N5 TEST REPORT

The following shall be reported:

(a) Manufacturer, model, type and size of the tap.

(b) Force applied.

(c) Any cracks, breakages, bending, or other failure.

(d) Compliance or non-compliance of criteria specified.

(e) Reference to this test method, i.e., AS/NZS 3718, Appendix N.

COPYRIGHT

APPENDIX O

DIMENSIONS OF TAPS

(Normative)

O1 SCOPE

This Appendix specifies a range of requirements for the dimensions of taps where compatibility and connectability is required. It provides prescriptive information that may be used for the design of tap ware

Where compliance with the performance requirements of this Standard have been established, design alteration is permitted without further testing, provided the design remains within the dimensions of Appendix O (this Appendix).

Where the design fully complies with all applicable dimensions in this Appendix, then the performance testing to Appendix L is not required to establish compliance.

O2 DIMENSIONS

Tap bodies and components parts of taps should comply with the appropriate dimensions shown in Figure 3.1 and Figures O3 to O11. For the purpose of this Appendix, nominal size of taps refers to the nominal bore of the tap.

O3 VALVE SEATING

O3.1 General

Valve seat shall either be integral with the tap body or a removable seat (see Figures O2 and O3).

O3.2 Dimensions

The valve seat shall conform to the dimensions shown in Figure O4.

O4 HANDLES

Handles for T-head taps shall have minimum dimensions as shown in Figure O8.

COPYRIGHT

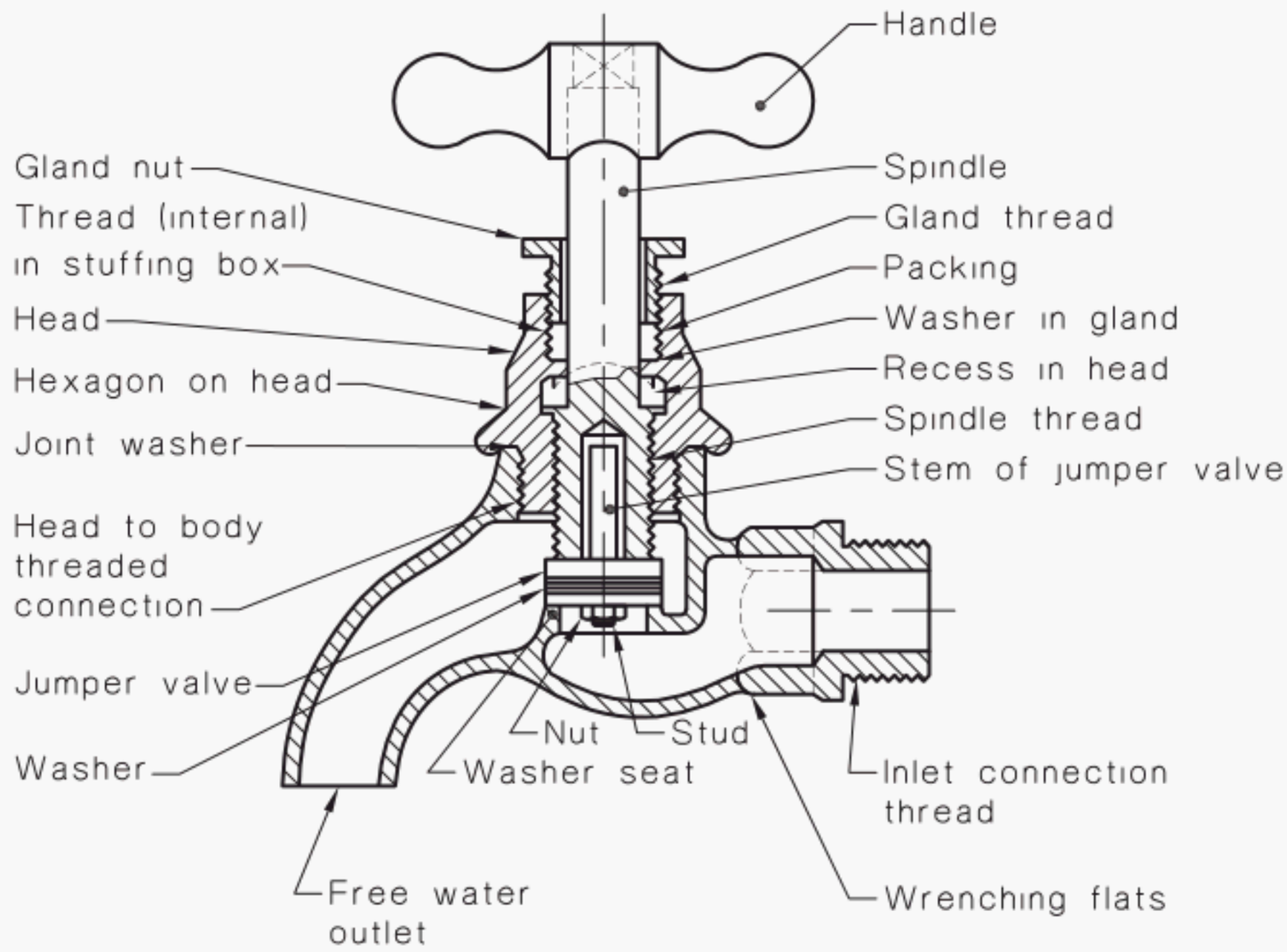

(a) Packed gland type head assembly

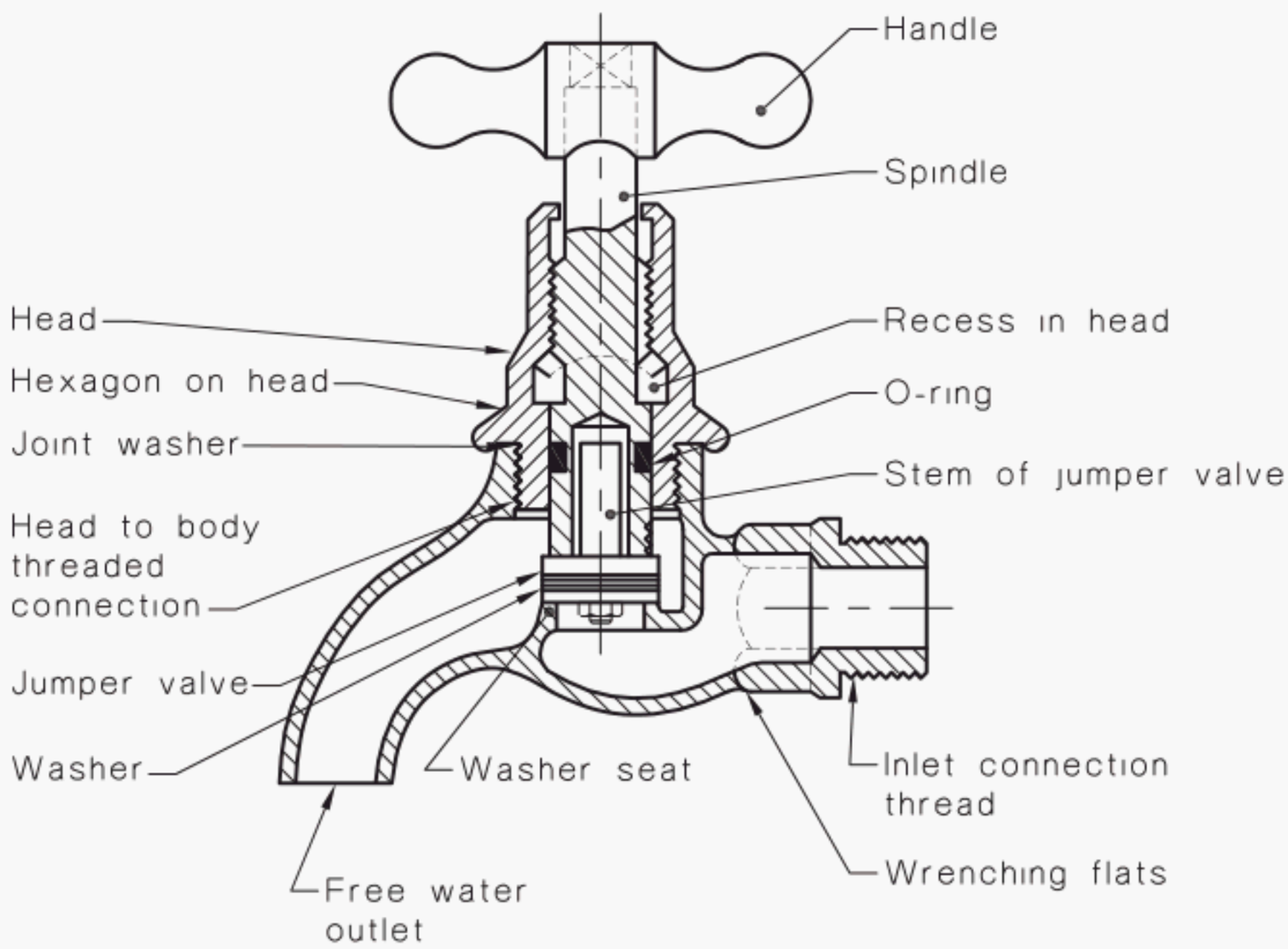

(b) O-ring type head assembly

FIGURE O1 TYPICAL CROSS-SECTIONS OF BIB TAP ASSEMBLIES

COPYRIGHT

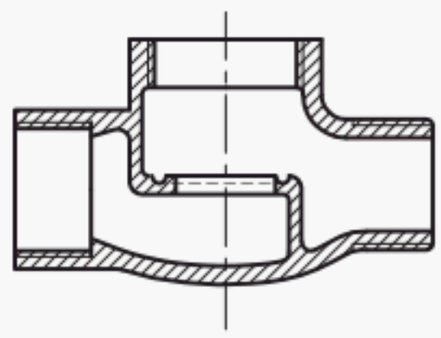

(a) In-line stop tap

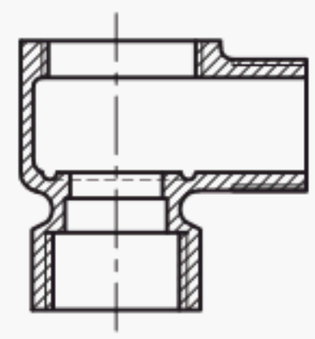

(b) Right-angle stop tap

NOTES:

1 For details for valve seating and head attachment, see Figure O3.

2 Inlet and outlet connections to comply with Clause 3.2.

FIGURE O2 BODIES OF STOP TAPS

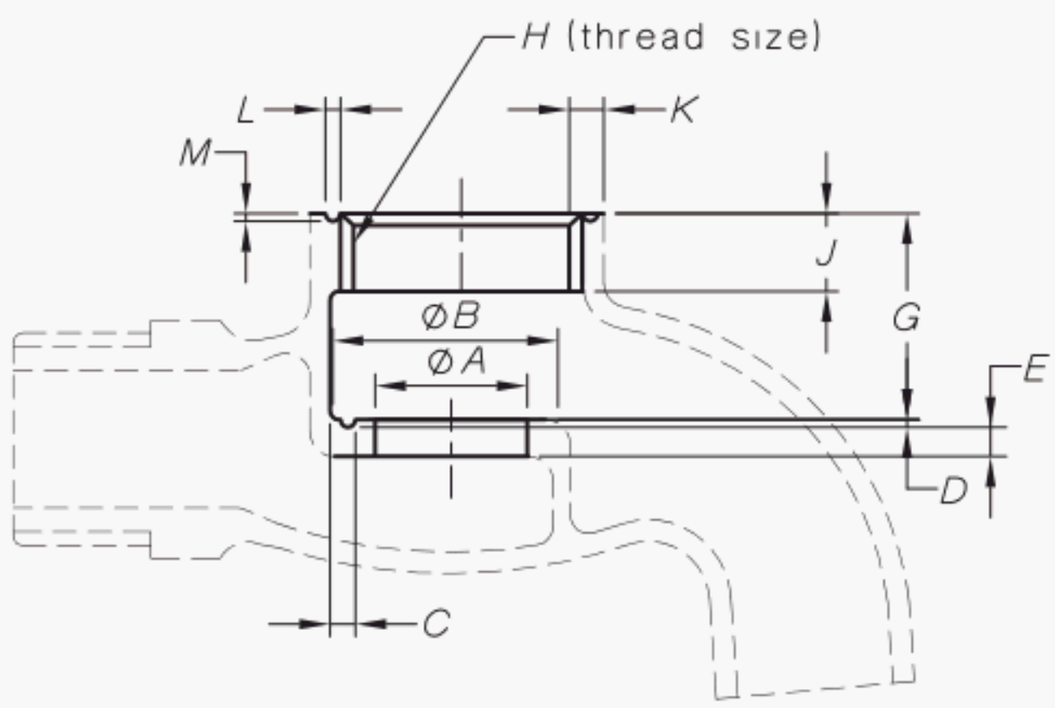

Nominal size of tap	A mm		B (Note 4) mm		C mm	D mm	E mm	G (Note 1) mm		H* (thread size designation in inches)	J mm	K mm (Note 3)	L mm	M mm
	Min.	Max.	Min.	Max.	Min.	Min.	Min.	Min.	Max.		Min.	Min.	Min.	Min.
DN 10	9.02	9.53	14.20	15.0	1.8	0.7	1.9	19.96	20.20	(Note 2)	6.3	3.7	0.8	0.4
DN 12	12.19	12.70	19.0	19.80	1.8	0.7	1.9	23.01	23.40	5/8	7.9	4.0	0.8	0.4
DN 15	15.37	15.88	22.20	23.0	2.0	0.7	1.9	23.01	23.40	3/4	7.9	4.0	0.8	0.4
DN 20	18.54	19.05	25.40	26.20	2.2	0.7	1.9	26.19	26.60	7/8	9.5	4.0	0.8	0.4
DN 25	24.89	25.40	31.70	32.50	4.5	1.5	2.3	32.54	32.90	11/4	12.7	4.1	0.8	0.4
DN 32	31.24	31.75	38.10	38.90	4.5	1.5	2.3	41.28	41.70	11/2	12.7	4.1	0.8	0.4
DN 40	37.59	38.10	44.40	45.20	4.5	1.5	2.9	46.81	47.20	13/4	12.7	4.7	0.8	0.4
DN 50	50.29	50.80	57.10	57.90	4.5	1.5	2.9	58.75	59.10	21/4	14.2	4.7	0.8	0.4

* Fastening pipe thread to AS 1722.2, Series G

NOTES:

1 The maximum dimension applies only to stop taps and ferrule taps.

2 For 10 mm taps, the thread is 3/4-20 UNEF—2B to AS 3635.

3 For size 10 mm to 20 mm taps, these values include provision for an external thread not coarser than 1.33 mm pitch (i.e. 19 t.p.i.) for attachment of an 'easy-clean' cover. Where no external thread is required, this dimension may be reduced by 1.0 mm.

4 Seat of tap shall be a full annular ring with an outer recess groove that may break through to a clear waterway on the delivery side of the tap body.

5 The gasket groove has an opening at the sealing face complying with dimension L and a depth complying with dimension M. The groove shall be triangular, square, or rounded at the bottom.

FIGURE O3 VALVE SEAT AND HEAD ATTACHMENT

COPYRIGHT

A1

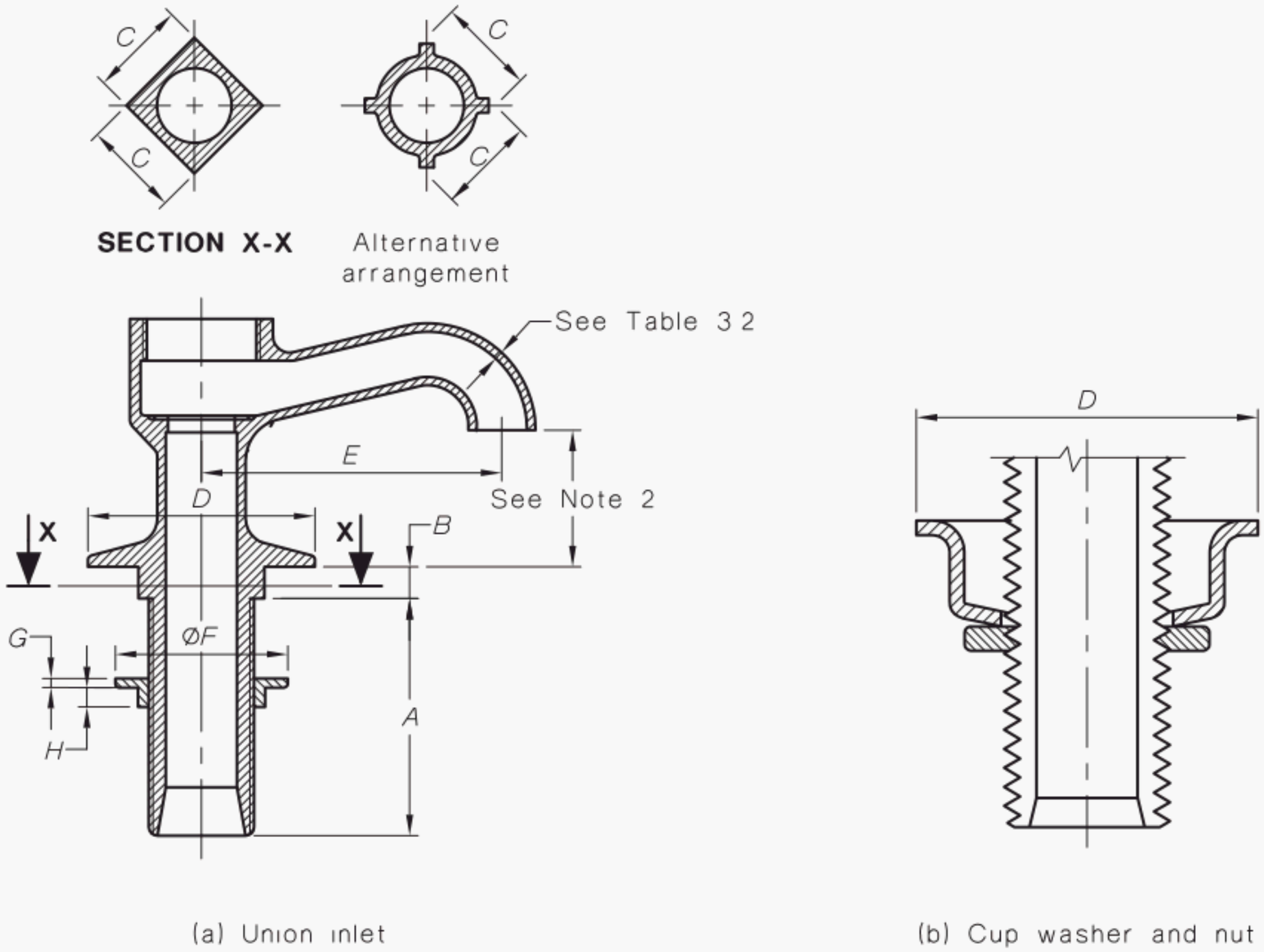

(a) Union inlet

(b) Cup washer and nut

Nominal size of tap	*A* mm	*B* mm	*C*, mm (across flats)		*D* mm	*E* mm	*F* mm	*G* mm	*H* mm
	Min.	Min.	Min.	Max.	Min.	Min.	Min.	Min.	Min.
DN 10	63	4	27.0	28.6	45	66	42	2.3	7.9
DN 12	63	4	27.0	28.6	45	66	42	2.3	7.9
DN 20	63	4	27.0	28.6	45	66	42	2.3	7.9

NOTES:

1 This figure is to be viewed in conjunction with Figure O3.

2 When installed, outlets shall have no drip back along outer surfaces at any flow rate: They shall comply with the air gap requirements of AS 3500.1.

FIGURE O4 (a) BODIES OF PILLAR TAPS

COPYRIGHT

A1

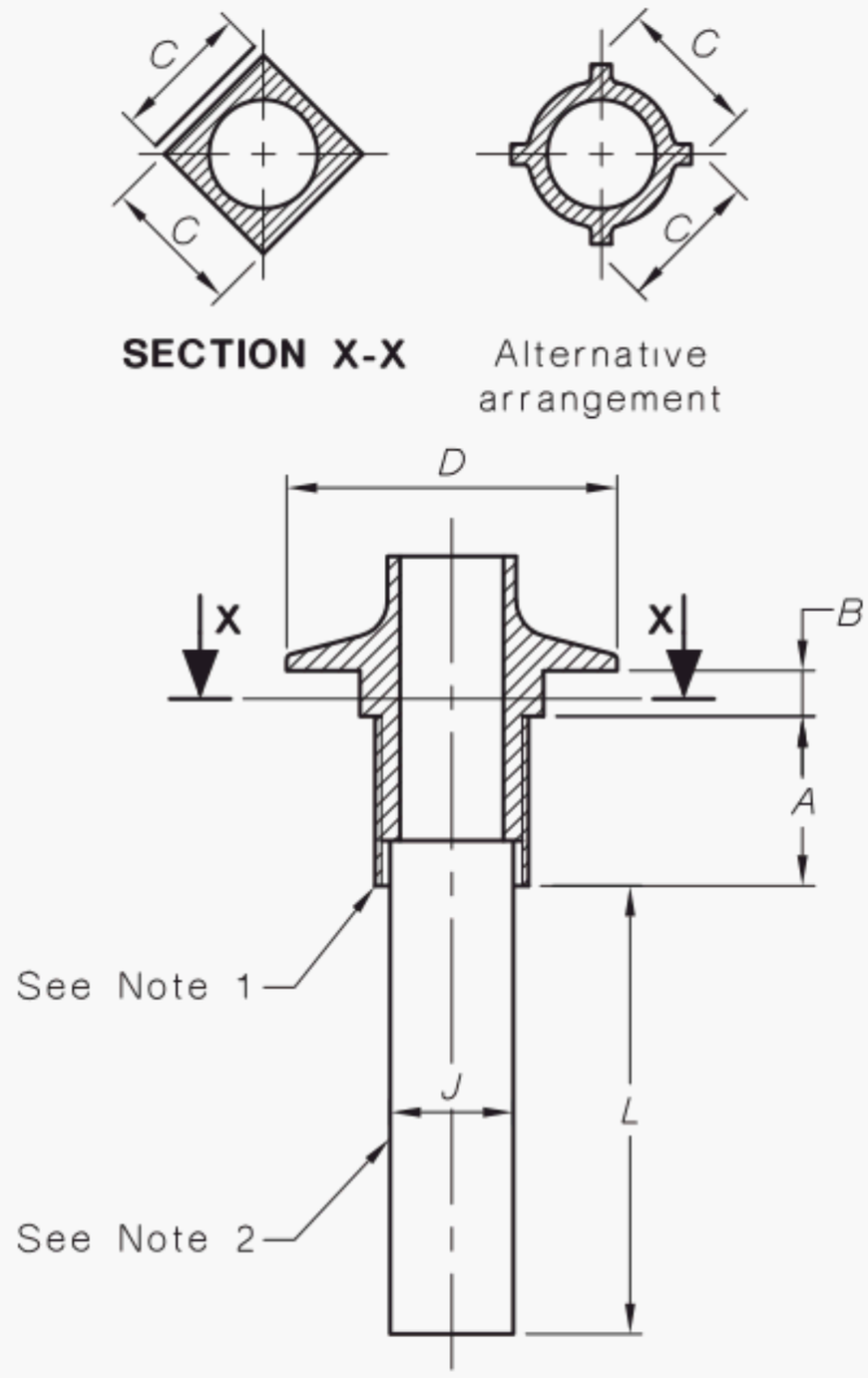

(c) Tube inlet

Nominal size of tap	*A* mm	*B* mm	*C*, mm (across flats)		*D* mm	*J* (See Note 3) mm	*L* mm
	Min.	Min.	Min.	Max.	Min.		
DN 10	25	4	27.0	28.6	45	10	300
DN 12	25	4	27.0	28.6	45	15	300
DN 20	25	4	27.0	28.6	45	20	300

NOTES:

1 Capillary joint to be in accordance with AS 3688.

2 Annealed copper pipe to be in accordance with Clause 2.2.3.

3 Nominal size of pipe.

FIGURE O4 (b) BODIES OF PILLAR TAPS

COPYRIGHT

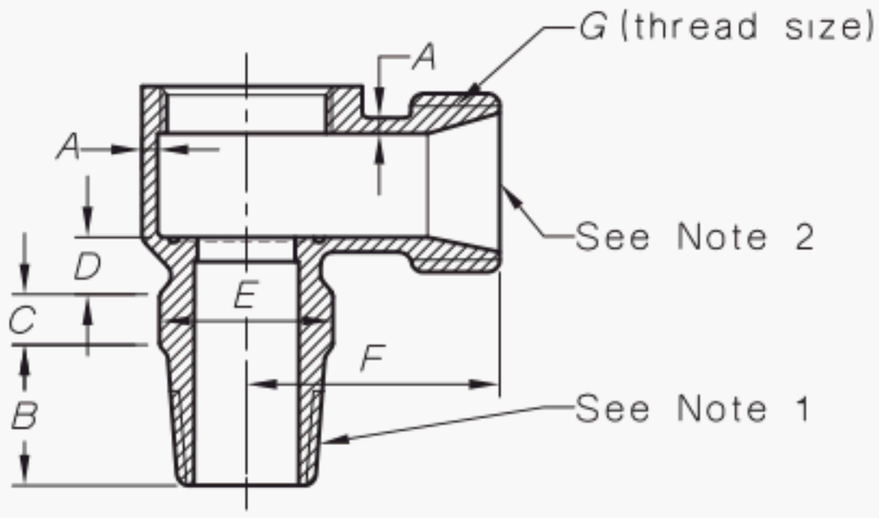

Nominal size of tap	Nominal size of union end	*A* mm	*B* mm	*C* mm	*D* mm	*E* (across flats hexagon or square) mm	*F* mm	*G** (thread size designation)
		Min.	Min.	Min.	Min.	Min.	Min.	
DN 12	DN 20	1.9	23	5	8	22	39	3/4
DN 20	DN 25	1.9	24	6	14	27	44	1
DN 25	DN 32	2.3	24	6	22	34	50	11/4
DN 32	DN 40	2.3	27	8	22	43	55	13/4
DN 40	DN 50	2.9	30	9	25	49	60	2
DN 50	DN 65	2.9	35	9	25	60	69	21/2

* Fastening pipe thread to AS 1722.2, Series GB

NOTES:

1 Inlet connection thread to be the same size as the nominal size of the tap and Series R to AS 1722.1.

2 Outlet connection end to comply with AS 3688.

3 This Figure is to be viewed in conjunction with Figure O3

FIGURE O5 BODIES OF FERRULE TAPS

COPYRIGHT

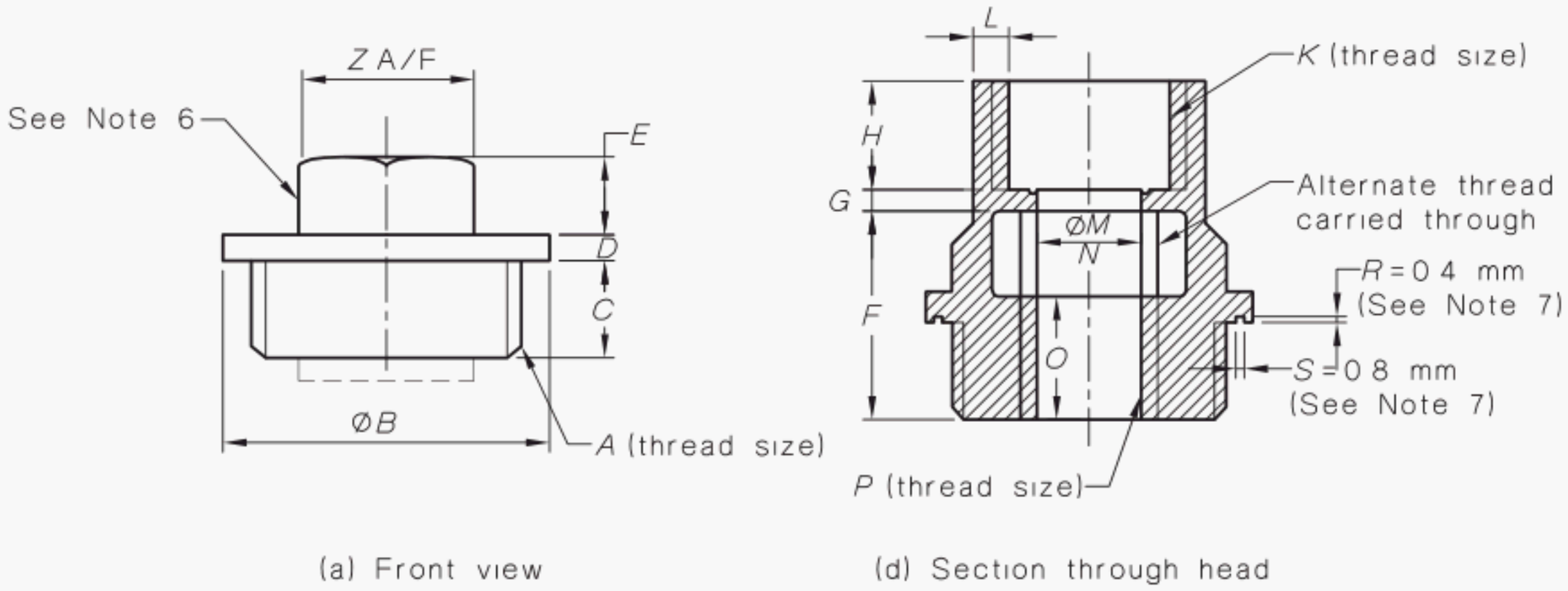

(b) Alternative section through bottom of head for DN 32 to DN 50 taps

(c) Section through gland

FIGURE O6 (in part) TAP HEADS—PACKED GLAND TYPE

COPYRIGHT

Accessed by UNSW - LIBRARY on 12 May 2017 (Document currency not guaranteed when printed)

Nominal size of tap	*A* (thread size*)	*B* mm (Note 2)	*C* (Note 3) mm		*D* mm	*E* mm	*F* mm	*G* mm	*H* mm	*J* (Note 3) mm		*K* (thread size†)	*L* mm	*M* mm		*N* mm	*O* mm	*P* (thread size ‡) (BSW)	*T* mm	*U* mm	*V* (across flats) (Note 5)	*W* mm	*X* (thread sizes§) mm	*Y* mm		*Z* mm (across flats) (Note 6) mm
		Min.	Min.	Max.	Min.	Min.	Min.	Min.	Min.	Min.	Max.		Min.	Min.	Max.	Min.	Min.	Inch	Min.	Min.	Min.	Min.		Min.	Max.	
DN 10	Note 1	27.4	7.9	8.7	1.9	6	16.6	2.3	9.5	—	—	Note 4	3.0	9.14	9.27	13.4	11.3	1/2	—	—	15.8	3.1	See	9.4	9.7	17.9
DN 12	5/8	29.2	9.5	10.3	1.9	6	19.5	2.3	12.7	—	—	3/8	3.0	9.65	9.78	15.0	11.3	9/16	—	—	17.4	3.1	Note 4	10.0	10.3	19.5
DN 15	¾	32.2	9.5	10.3	1.9	6	19.5	2.3	12.7	—	—	3/8	3.0	9.65	9.78	15.0	11.3	9/16	—	—	17.4	3.1	3/8	10.0	10.3	19.5
																							3/8			
DN 20	7/8	36.5	11.1	11.9	1.9	9	21.1	2.3	13.4	—	—	1/2	3.4	11.25	11.38	16.6	12.1	5/8	—	—	22.2	3.1	1/2	11.6	11.8	21.1
DN 25	$1^{1/4}$	47.8	14.2	15.1	2.3	9	27.5	3.1	15.8	—	—	5/8	3.4	12.83	12.95	19.8	15.3	3/4	—	—	25.4	3.9	5/8	13.2	13.5	24.3
DN 32	$1^{1/2}$	53.8	14.2	15.1	2.3	12	33.0	3.1	15.8	14.2	15.1	5/8	3.4	14.43	14.55	19.8	16.1	3/4	4.4	3.7	25.4	3.9	5/8	14.8	15.0	24.3
DN 40	$1^{3/4}$	60.9	14.2	15.1	2.9	12	35.4	3.1	17.4	17.4	18.2	5/8	3.4	14.43	14.55	19.8	16.9	3/4	4.4	3.7	25.4	4.7	5/8	14.8	15.0	25.5
DN 50	$2^{1/4}$	72.9	15.8	16.6	2.9	12	44.9	3.1	19.0	24.5	25.4	3/4	3.4	15.24	15.37	19.8	22.4	3/4	4.4	3.7	30.1	4.7	3/4	15.6	15.9	25.5

* Fastening pipe thread to AS 1722.2, Series GA

† Fastening pipe thread to AS 1722.2, Series G

‡ Coarse thread to AS 3501, Medium Class

§ Fastening pipe thread to AS 1722.2, Series GB

NOTES:

1 For 10 mm taps, the thread is 3/4—20 UNEF—2A to AS 3635.

2 For 10 mm to 20 mm taps, this dimension includes provision for a thread not coarser than 1.33 mm pitch (i.e. 19 t.p.i.) for attachment of a cover. Where no external thread is required, this dimension may be reduced by 2 mm.

3 The maximum dimension applies only to stop taps and ferrule taps.

4 For 10 mm taps, the thread is RP 3/8 to AS 1722.1.

5 For 12 mm, 15 mm and 20 mm taps, the flange on the gland may be a knurled circle of a diameter not less than the dimensions shown in Column *V*.

6 Four wrenching flats (minimum) to be provided.

7 The groove (see dimension *R* and *S*) shall be triangular, square, or rounded at the bottom.

FIGURE O6 (in part) TAP HEADS—PACKED GLAND

COPYRIGHT

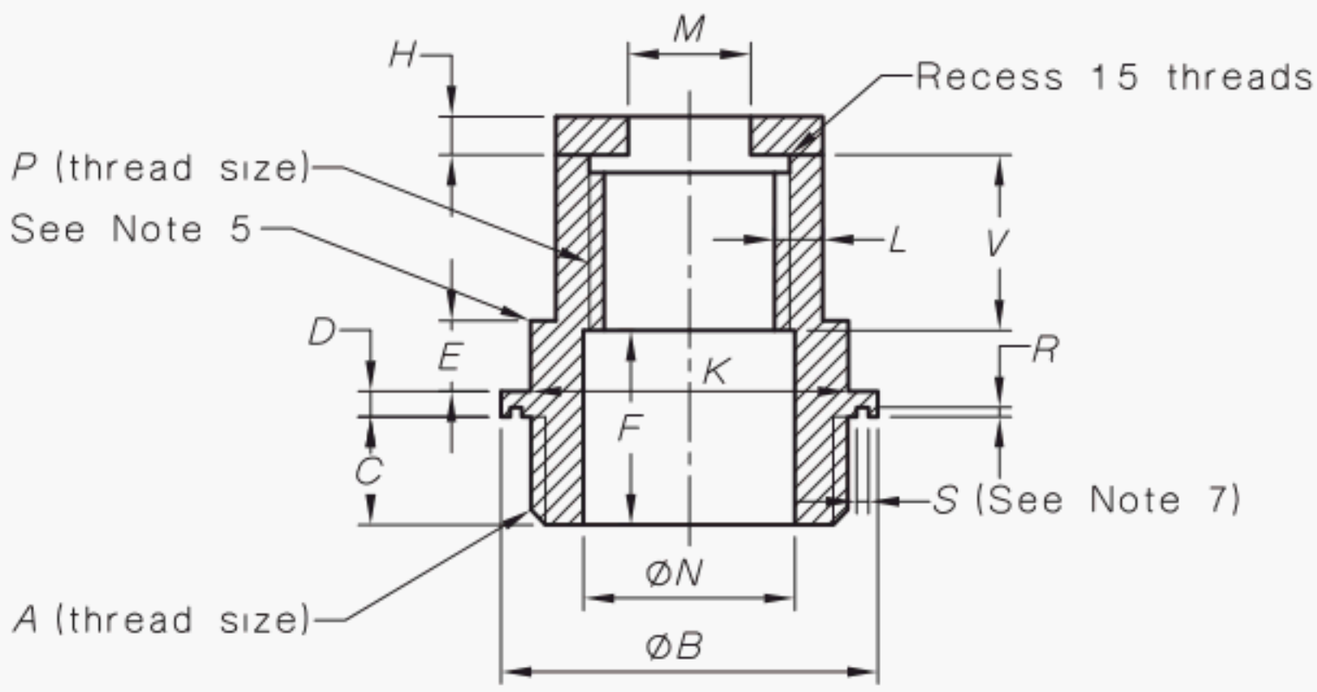

(a)(i) Without cover

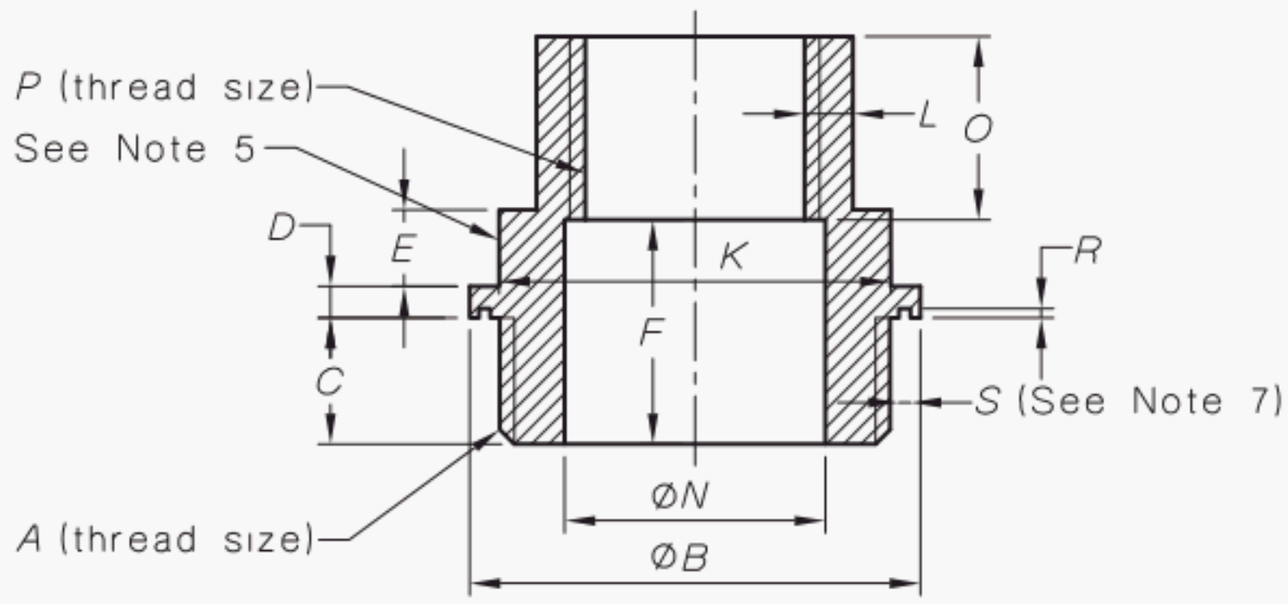

(a)(ii) Without cover

Section through head

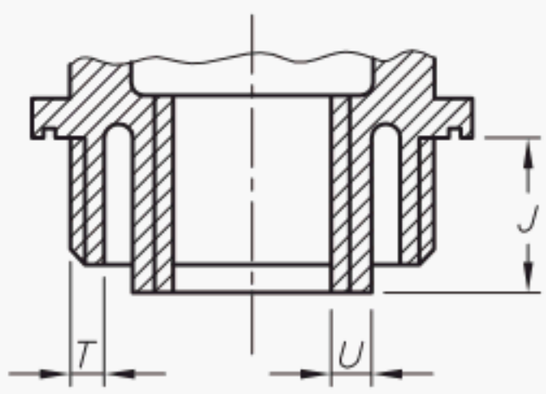

(b) Alternative section through bottom of head
for taps above DN 25

FIGURE O7 (in part) TAP HEADS—O-RING TYPE

COPYRIGHT

Accessed by UNSW - LIBRARY on 12 May 2017 (Document currency not guaranteed when printed)

Nominal size of tap	*A* (thread size*)	*B* mm (Note 2)	*C* (Note 3) mm		*D* mm	*E* mm	*F* mm	*H* mm	*J* (Note 3) mm		*K* (across flats) mm	*L* mm	*M* mm		*N* mm		*O* mm	*P* (thread size†) (BSW)	*R* mm (Note 7)	*S* mm (Note 7)	*T* mm	*U* mm	*V* (across flats) (Note 5) mm
		Min.	Min.	Max.	Min.	Min.	Min.	Min.	Min.	Max.		Min.	Min.	Max.	Min.	Max.	Min.	Inch	Min.	Min.	Min.	Min.	
DN 10	Note 1	27.4	7.9	8.7	1.9	6	16.7	2.3	—	—	17.9	3.0	9.14	9.27	13.16	13.26	9.5	1/2	0.4	0.8	—	—	14.5
DN 12	5/8	29.2	9.5	10.3	1.9	6	17.8	2.3	—	—	19.5	3.4	9.65	9.78	14.73	14.83	9.5	9/16	0.4	0.8	—	—	14.5
DN 15	3/4	32.2	9.5	10.3	1.9	6	17.8	2.3	—	—	19.5	3.4	9.65	9.78	14.73	14.83	9.5	9/16	0.4	0.8	—	—	14.5
DN 20	7/8	36.5	11.1	11.9	1.9	9	18.6	2.3	—	—	21.1	3.6	11.25	11.38	16.31	16.41	12.1	5/8	0.4	0.8	—	—	15.5
DN 25	$1^{1/4}$	47.9	14.2	15.1	2.3	9	21.7	2.3	—	—	24.3	3.7	12.83	12.95	19.51	19.61	15.3	3/4	0.4	0.8	—	—	19.1
DN 32	$1^{1/2}$	53.8	14.2	15.1	2.3	12	29.7	2.3	14.2	15.1	24.3	3.7	14.43	14.55	19.51	19.61	16.1	3/4	0.4	0.8	4.4	1.9	19.9
DN 40	$1^{3/4}$	60.9	14.2	15.1	2.9	12	32.1	2.3	17.4	18.2	25.5	3.7	14.43	14.55	19.51	19.61	16.9	3/4	0.4	0.8	4.4	1.9	20.7
DN 50	$2^{1/4}$	72.9	15.8	16.6	2.9	12	35.3	2.3	24.5	25.4	25.5	3.7	15.24	15.37	19.51	19.61	22.4	3/4	0.4	0.8	4.4	1.9	26.2

* Fastening pipe thread to AS 1722.2, Series GA.

† Coarse thread to AS 3501, Medium Class.

NOTES:

1 For 10 mm taps, the thread is 3/4 —20 UNEF—2A TO AS 3635.

2 For 10 mm up to 20 mm taps, this dimension includes provision for a thread not coarser than 1.33 mm pitch (i.e., 19 t.p.i) for attachment of a cover. Where no external thread is required, this dimension may be reduced by 2 mm.

3 The maximum dimension applies only to stop taps.

4 Where a cover or cover type handle is fitted, head (a)(ii) may be used provided that the spindle cannot be screwed up to an extent that the valve stem can become disengaged from the spindle.

5 Four wrenching flats (minimum) to be provided.

6 Dimension *M* may be increased when the head is intended for use with a spindle of large diameter, provided that the tolerances and clearances as specified in conjunction with dimension *E* of Figure O9 are maintained on both components.

7 The gasket groove has an opening at the sealing face complying with dimension *S* and a depth complying with dimension *R*. The groove shall be triangular, square, or rounded at the bottom.

FIGURE O7(in part) TAP HEADS—O-RING TYPE

COPYRIGHT

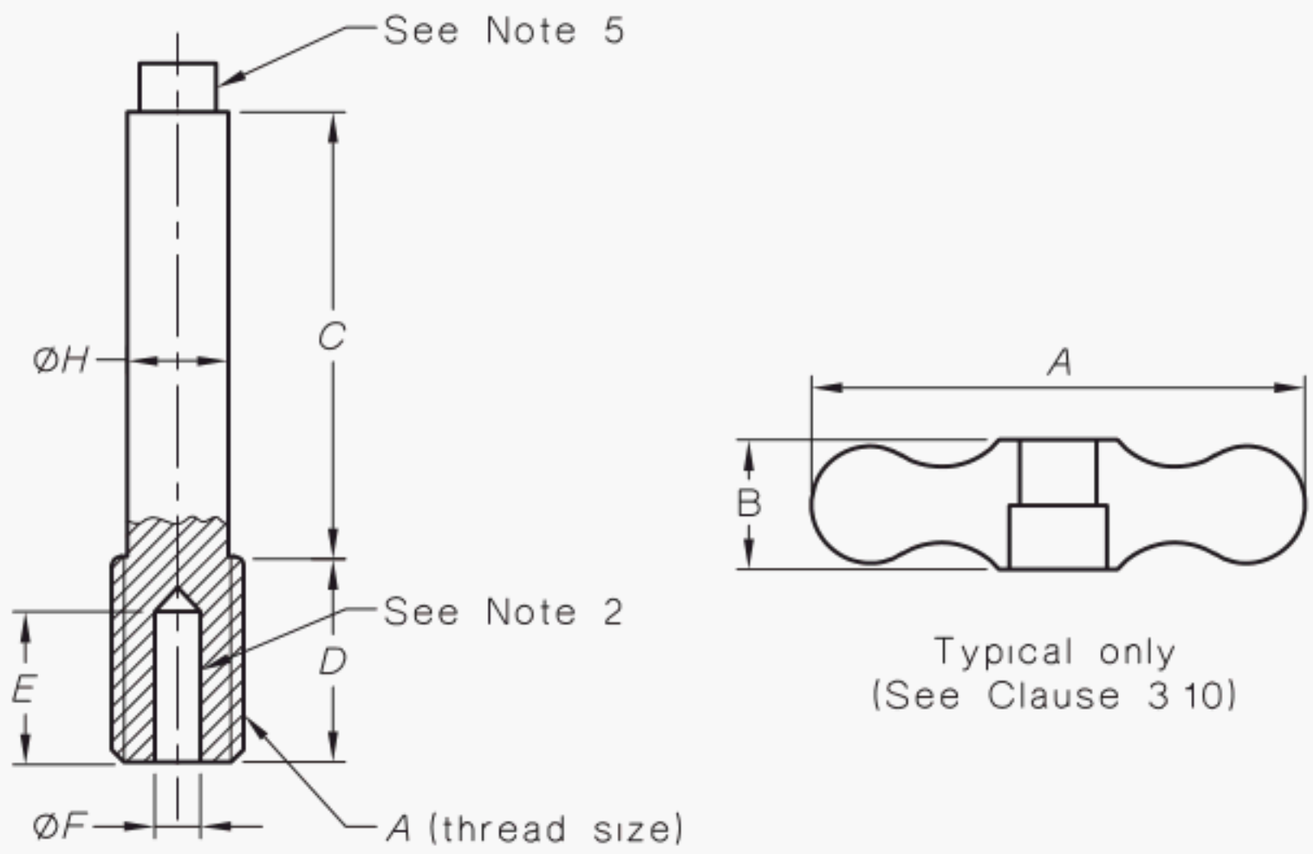

Nominal size	*A* mm	*B* mm	*C* mm (Note 1)	*D* mm	*E* mm	*F* mm		*G** (thread size) (BSW)	*H* mm	
	Min.	Min.	Min.	Min.	Min.	Min.	Max.	Inch	Min.	Max.
DN 10	50.8	13.4	51.0	16.6	12.1	5.16	5.28	1/2	9.02	9.14
DN 12	50.8	14.2	52.0	19.0	15.8	5.16	5.28	9/16	9.40	9.53
DN 15	50.8	14.2	52.0	19.0	15.8	5.16	5.28	9/16	9.40	9.53
DN 20	55.5	14.2	55.0	21.4	18.2	6.35	6.48	5/8	11.00	11.13
DN 25	61.8	15.8	70.0	25.4	22.2	6.35	6.48	3/4	12.57	12.70
DN 32	69.8	19.0	75.0	33.3	29.3	7.92	8.05	3/4	14.17	14.30
DN 40	76.2	19.0	77.0	36.5	30.9	8.71	8.84	3/4	14.17	14.30
DN 50	92.0	22.2	82.0	46.0	40.4	8.71	8.84	3/4	14.99	15.11

* Coarse thread to AS 3501, Medium Class.

NOTE: Applicable to spindles with fixed handles. If the handle is removable, the spindle may be shorter provided that the all tap parts are interchangeable between units of the same size and type from any one manufacturer.

FIGURE O8 SPINDLES AND HANDLES FOR TAPS WITH PACKED GLANDS

COPYRIGHT

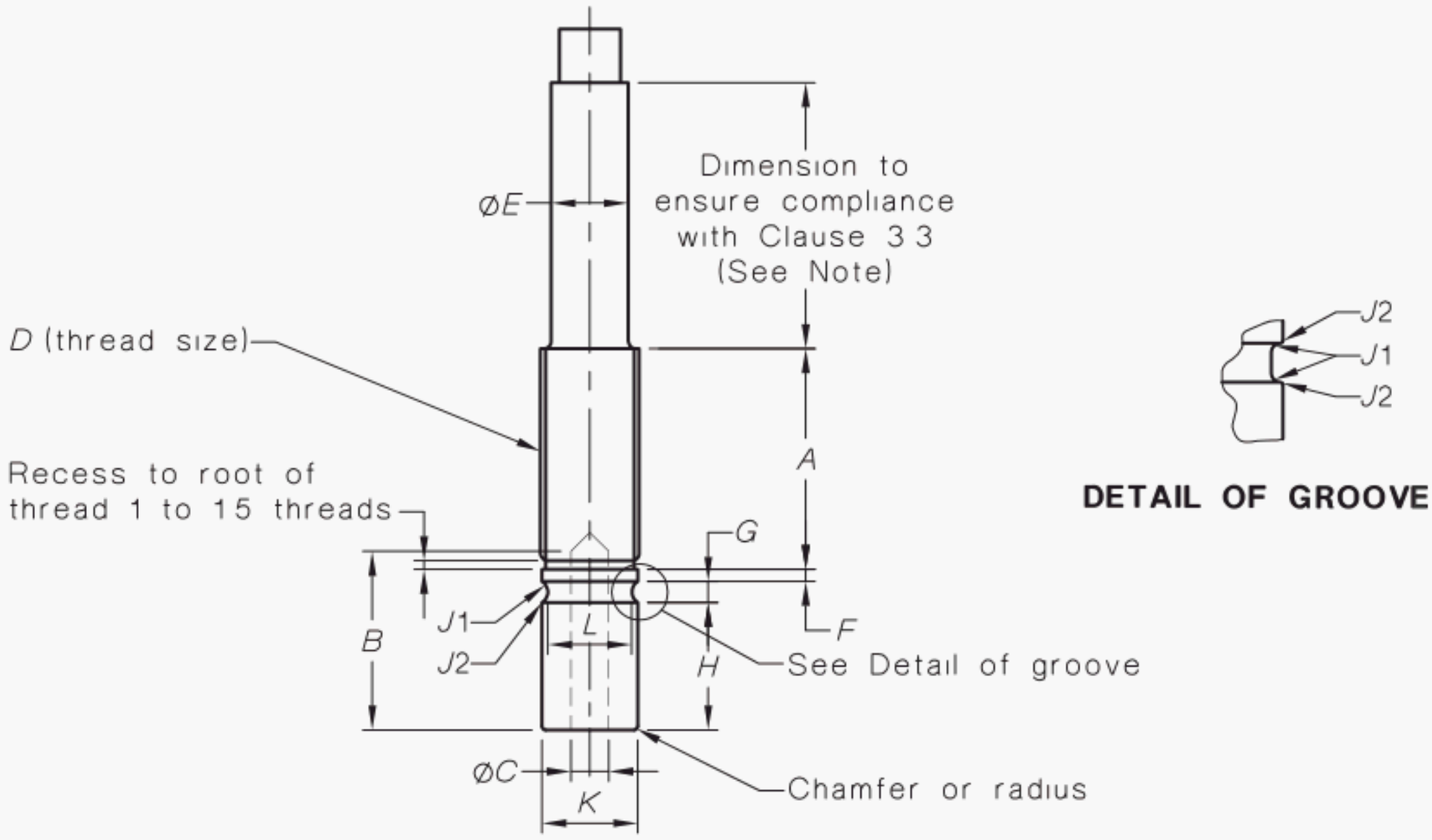

Nominal size of tap	*A* mm	*B* mm	*C* mm		*D** (thread size) (BSW)	*E* (See Note) mm		*F* mm	*G* mm		*H* mm	*J1* (radius at the bottom of groove) mm		*J2* (radius at outside edge of groove) mm		*K* diameter mm		*L* diameter mm	
	Min.	Min.	Min.	Max.	Inch	Min.	Max.	Min.	Min.	Max.	Min.	Min.	Max.	Min.	Max.	Min.	Max.	Min.	Max.
DN 10	16.6	12.1	5.16	5.28	1/2	9.02	9.14	2.3	2.92	3.30	11.0	0.25	0.60	0.12	0.25	13.01	13.08	9.20	9.30
DN 12	16.6	15.8	5.16	5.28	9/16	9.40	9.53	2.3	3.18	3.56	12.2	0.25	0.60	0.12	0.25	14.58	14.66	10.31	10.41
DN 15	16.6	15.8	5.16	5.28	9/16	9.40	9.53	2.3	3.18	3.56	12.2	0.25	0.60	0.12	0.25	14.58	14.66	10.31	10.41
DN 20	18.7	18.2	6.35	6.48	5/8	11.0	11.13	2.3	3.18	3.56	13.0	0.25	0.60	0.12	0.25	16.15	16.23	11.89	11.99
DN 25	21.9	22.2	6.35	6.48	3/4	12.57	12.70	2.3	3.18	3.56	16.2	0.25	0.60	0.12	0.25	19.35	19.43	15.09	15.19
DN 32	29.8	29.3	7.92	8.05	3/4	14.17	14.30	2.3	3.18	3.56	24.2	0.25	0.60	0.12	0.25	19.35	19.43	15.09	15.19
DN 40	32.2	30.9	8.71	8.84	3/4	14.17	14.30	2.3	3.18	3.56	26.5	0.25	0.60	0.12	0.25	19.35	19.43	15.09	15.19
DN 50	35.4	40.4	8.71	8.84	3/4	14.99	15.11	2.3	3.18	3.56	29.7	0.25	0.60	0.12	0.25	19.35	19.43	15.09	15.19

* Coarse thread to AS 3501, Medium Class.

NOTE: Dimension E may be increased where the spindle is intended for use with a head of larger diameter, provided that the tolerances and clearances as specified in conjunction with dimension *M* given in Figure O7 are maintained.

FIGURE O9 SPINDLES FOR TAPS WITH O-RINGS

COPYRIGHT

A1

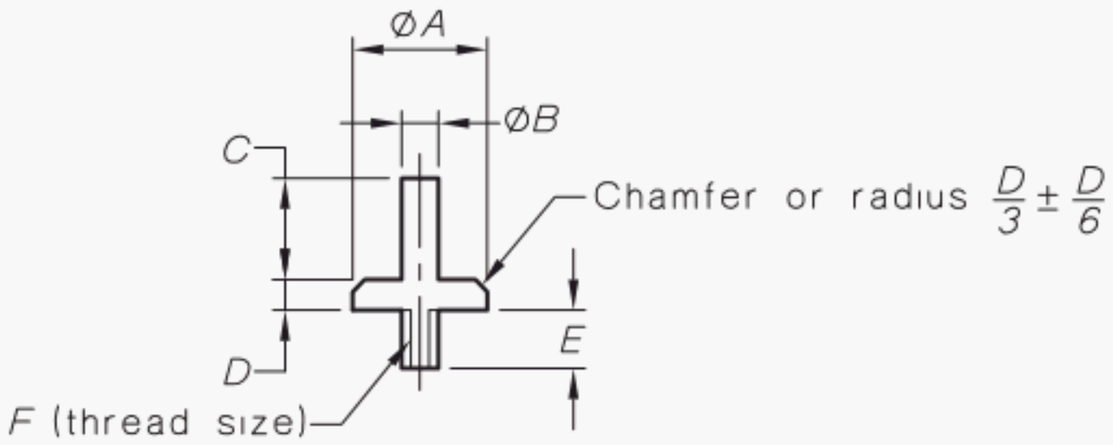

(a) Plain type valve

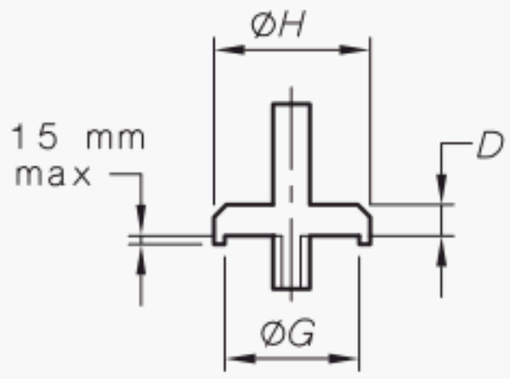

(b) Shrouded type valve

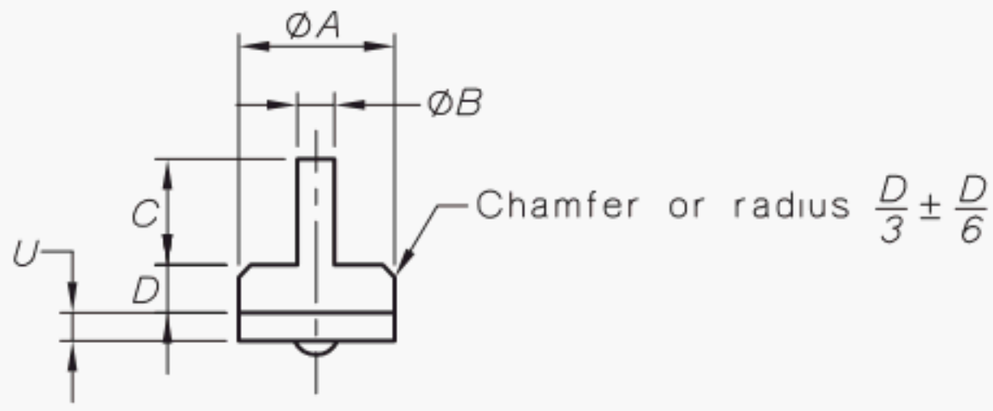

(c) Valve with metal or plastic body

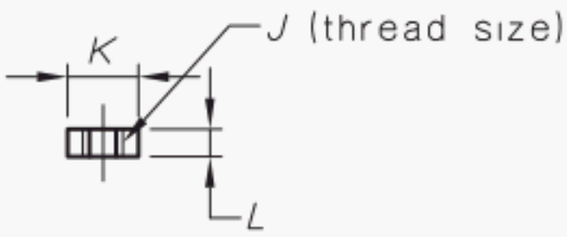

(d) Nut

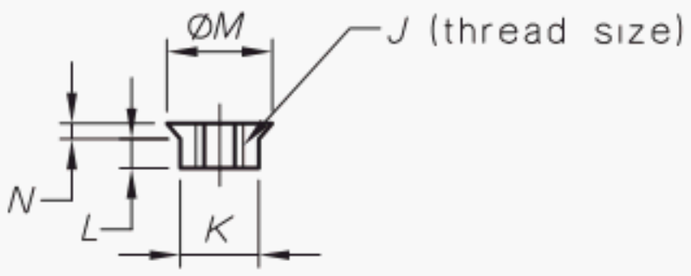

(e) Alternative nut for 25 mm to 50 mm taps

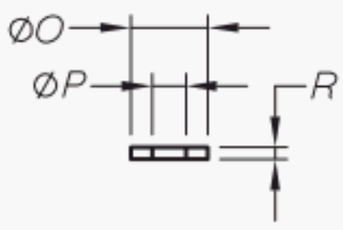

(f) Metal washer between valve washer and nut

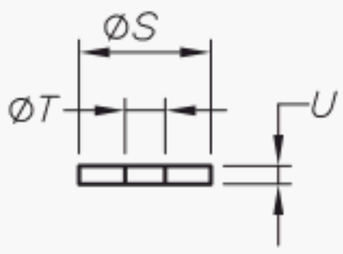

(g) Tap washer

FIGURE O10 (in part) DIMENSIONS OF JUMPER VALVES AND TAP WASHERS

COPYRIGHT

Accessed by UNSW - LIBRARY on 12 May 2017 (Document currency not guaranteed when printed)

Nominal size of tap	*A* mm		*B* mm		*C* mm		*D* mm		*E* mm	*F** (thread size) (BSW)	*G* mm		*H* mm		*J** (thread size) (BSW)	*K* mm (across flats)	*L* mm	*M* mm	*N* mm	*O* mm	*P* mm		*R* mm	*S* mm		*T* mm	*U* mm	
	Min.	Max.	Min.	Max.	Min.	Max.	Min.	Max.	Min.	Inch	Min.	Max.	Min.	Max.	Inch	Min.	Min.	Min.	Min.	Min.	Min.	Max.	Min.	Min.	Max.	Min.	Min.	Max.
DN 10	14.0	14.2	4.80	4.93	10.5	11.3	3.5	3.8	7.9	3/16	14.38	14.50	16.0	16.5	3/16	7.9	2.5	—	—	8.4	4.8	5.1	0.5	14.0	14.5	4.7	3.1	3.4
DN 12	18.8	19.3	4.80	4.93	14.3	15.0	3.9	4.2	7.9	3/16	19.18	19.30	20.0	20.3	3/16	7.9	2.5	—	—	8.4	4.8	5.1	0.5	18.8	19.3	4.7	3.1	3.4
DN 15	21.9	22.4	4.80	4.93	14.3	15.0	3.9	4.2	7.9	3/16	22.61	22.73	23.5	23.7	3/16	7.9	2.5	—	—	8.4	4.8	5.1	0.5	22.2	22.7	4.7	3.1	3.4
DN 20	25.1	25.6	5.94	6.07	16.6	17.4	4.7	5.0	9.5	¼	25.53	25.65	26.4	26.6	¼	9.5	2.8	—	—	10.0	6.4	6.7	0.5	25.1	25.6	6.3	3.1	3.4
DN 25	33.0	33.5	5.94	6.07	20.7	21.4	4.7	5.0	9.5	¼	33.45	33.58	34.6	34.9	¼	11.1	2.8	15.8	1.5	15.8	6.4	6.7	1.2	33.0	33.5	6.3	3.1	3.4
DN 32	39.4	39.9	7.26	7.39	27.8	28.5	5.5	5.8	11.1	¼	39.80	39.93	41.0	41.2	¼	11.1	2.8	19.0	1.5	19.0	6.4	6.7	1.2	39.4	39.9	6.3	3.1	3.4
DN 40	47.3	47.8	8.05	8.18	29.3	30.1	5.5	5.8	12.7	5/16	47.75	47.88	48.9	49.2	5/16	12.7	4.0	25.4	2.3	25.4	8.0	8.3	1.4	47.3	47.8	7.9	3.1	3.4
DN 50	61.6	62.1	8.05	8.18	38.9	39.6	7.1	7.4	12.7	5/16	62.03	62.15	63.2	63.5	5/16	12.7	4.0	33.3	2.3	33.3	8.0	8.3	1.4	61.6	62.1	7.9	3.1	3.4

* Coarse thread to AS 3501, Medium Class

FIGURE O10 (in part) DIMENSIONS OF JUMPER VALVES AND TAP WASHERS

COPYRIGHT

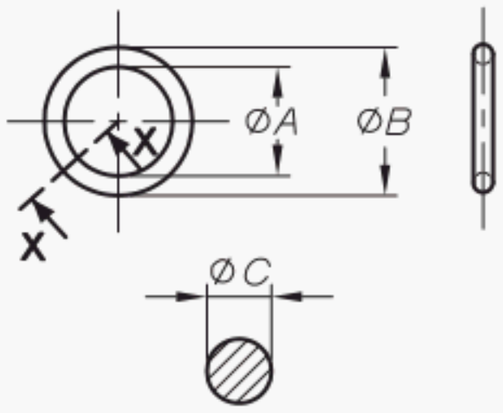

Nominal size of tap	*A* mm		*B* mm		*C* mm	
	Min.	Max.	Min.	Max.	Min.	Max.
DN 10	8.69	8.94	13.26	13.82	2.29	2.44
DN 12	9.80	10.05	14.88	15.44	2.54	2.69
DN 15	9.80	10.05	14.88	15.44	2.54	2.69
DN 20	10.65	10.90	15.72	16.28	2.54	2.69
DN 25	13.82	14.07	18.90	19.46	2.54	2.69
DN 32	13.82	14.07	18.90	19.46	2.54	2.69
DN 40	13.82	14.07	18.90	19.46	2.54	2.69
DN 50	13.82	14.07	18.90	19.46	2.54	2.69

FIGURE O11 SPINDLE O-RINGS

COPYRIGHT

APPENDIX P

SIMULATED SAMPLES

(Normative)

P1 SCOPE

This Appendix sets out means by which simulated samples may be used for metallic components made from a single material.

P2 GENERAL

Components made from a single material may be pre-qualified by a simulated sample that has been tested and shown to meet the requirements of AS/NZS 4020. The simulated sample shall be manufactured using the same manufacturing processes and having an envelope of characteristics (e.g., dimensions, surface finish, material composition) within which the components lie.

P3 TYPICAL EXAMPLES OF SIMULATED SAMPLES

The process of pre-qualification may be applicable to metals and metallic alloys.

P4 SPECIAL ISSUES

For assessment purposes, it is critical that the documentation surrounding the simulated sample is comprehensive so that a clear relationship exists between the simulated sample and the component under consideration.

A clear description of the simulated sample should include the following:

(a) General description including a specific sample number.

(b) Material designation, such as—

  (i) manufacturer, commercial grade of material and this Standard; and

  (ii) where the maximum level of a specific element(s) of the material is critical to the test requirements, a measurement and recording of these elements and their maximum level.

(c) The processing used to manufacture the simulated sample should be the same as that used to manufacture the components and should be defined as follows:

  (i) The manufacturing processes used to make the simulated sample.

  (ii) Details of the specific processes that are deemed to be critical to passing the test requirements and meeting this Standard.

(d) Dimensional criteria, that is, a dimensioned drawing of the simulated sample including calculations under test conditions of—

  (i) total wetted surface area, in square millimetres;

  (ii) total wetted volume in millilitres; and

  (iii) surface area-to-volume ratio.

(e) Testing of the sample as in-line product or end-of-line product.

(f) The scaling factor.

(g) A copy of the test report for the simulated sample to this Standard, showing that the sample passed all appropriate test requirements.

COPYRIGHT

P5 COMPONENT DOCUMENTATION

The following documentation shall be required:

(a) Identification/name of the component.

(b) Title of the applicable Standard.

(c) Evidence that the component complies with the Standard.

(d) Evidence that the material matches that of the simulated sample.

(e) The processes used to manufacture the component.

(f) Dimensional criteria, that is, dimensioned drawing(s) of the component and finished product, including evidence of calculations for the component of the following criteria where the component is installed in the finished product:

(i) Total wetted surface area, in square millimetres.

(ii) Total wetted volume, in cubic centimetres or millilitres.

(iii) Surface area-to-volume ratio.

These dimensions will not be calculated or verified by the testing laboratory.

P6 ACCEPTANCE

A Conformity Assessment Body shall be used to verify that the requirements for simulated samples, as specified in the product Standard, are met.

COPYRIGHT

APPENDIX Q

ENDURANCE TEST FOR FLOW CONTROLLERS

(Normative)

Q1 SCOPE

This Appendix sets out the method by which taps or non-integrated tap outlets containing flow controllers are tested for flow controller endurance. The test measures the ability of flow controllers to operate satisfactorily with normal heated and cold-water applications during the expected life of the device.

Q2 PRINCIPLE

The test sample is installed in a test rig and connected to a temperature-controlled heated and cold water supply at a given pressure. A cyclic mechanism is used to open and close the valve providing water to the test sample. On completion of the pressure cycles, the test sample is retested in accordance with Appendix G.

Q3 APPLICATION

The method is applicable to the following cycle range:

(a) Where the flow controller is located upstream of the shut-off operating mechanism or forms part of the shut-off operating mechanism 50 000 ±500 cycles.

(b) For other flow controllers 10 000 ±100 cycles.

To simulate temperature changes that occur in actual operation, the flow controller is also subjected to alternate supplies of heated and cold water every 55 ±5 cycles between the manufacturer's maximum operating temperature ±3°C and at ambient water temperature.

Q4 APPARATUS

A test rig fitted with a counter to count complete cycles, and capable of the following performance:

(a) Operate the test sample through 50 000 ±500 cycles from 0 kPa to 350 kPa.

(b) Deliver heated water at a temperature of 80 ±3°C, or manufacturers maximum operating temperature.

(c) Deliver a flow rate of 20 L/min at 350 kPa.

(d) Provide 12 ±1 cycles per min.

(e) Alternate ambient and heated water every 55 ±5 cycles.

Q5 PROCEDURE

The procedure shall be as follows:

(a) Test the flow controller in accordance with Appendix G to determine and record the initial nominal flow rate and average flow rates at 150 kPa, 250 kPa, 350 kPa of the flow controller.

(b) Connect the test sample to the test rig.

(c) Adjust the supply pressures for each water supply and check that the pressures and water temperatures are as specified.

COPYRIGHT

(d) Commence the opening and closing operations of the valves supplying water to the test sample.

(e) Reset the cycle counter to zero.

(f) Operate the timing and control equipment to achieve the following complete cycle:

(i) Valve opens.

(ii) Valve remains open for a period of 1 +5, –0 s.

(iii) Valve fully closes.

(iv) Valve remains fully closed for 2 +5, –0 s.

During each cycle, the test sample shall be supplied with water from either the hot supply or the cold supply. After every 55 ±5 cycles, the supply shall be switched from being cold to hot and vice versa.

(g) Regularly check that the prescribed limits are being met throughout the test. The rig may be turned off to perform this test. Record the results and the number of cycles at which these checks occur.

(h) At the completion of Step (g), retest the test sample in accordance with Appendix G to determine and record the final nominal flow rate and average flow rates at 150 kPa, 250 kPa, 350 kPa of the test sample.

(i) Calculate the difference between the nominal flow rates of the test sample determined in Step (a) and Step (h).

Q6 TEST REPORT

The following shall be reported:

(a) Manufacturer, model, size, and type of the tap or non-integral tap outlet.

(b) Number of cycles completed.

(c) Initial nominal flow rate and average flow rates of the flow controller determined in Paragraph Q5 (a).

(d) Final nominal flow rate and average flow rates of the flow controller determined in Paragraph Q5 (h).

(e) The difference between the nominal flow rates of the test sample determined in Paragraph Q5 (i)

(f) Reference to this test method, i.e., Appendix Q, AS/NZS 3718.

COPYRIGHT

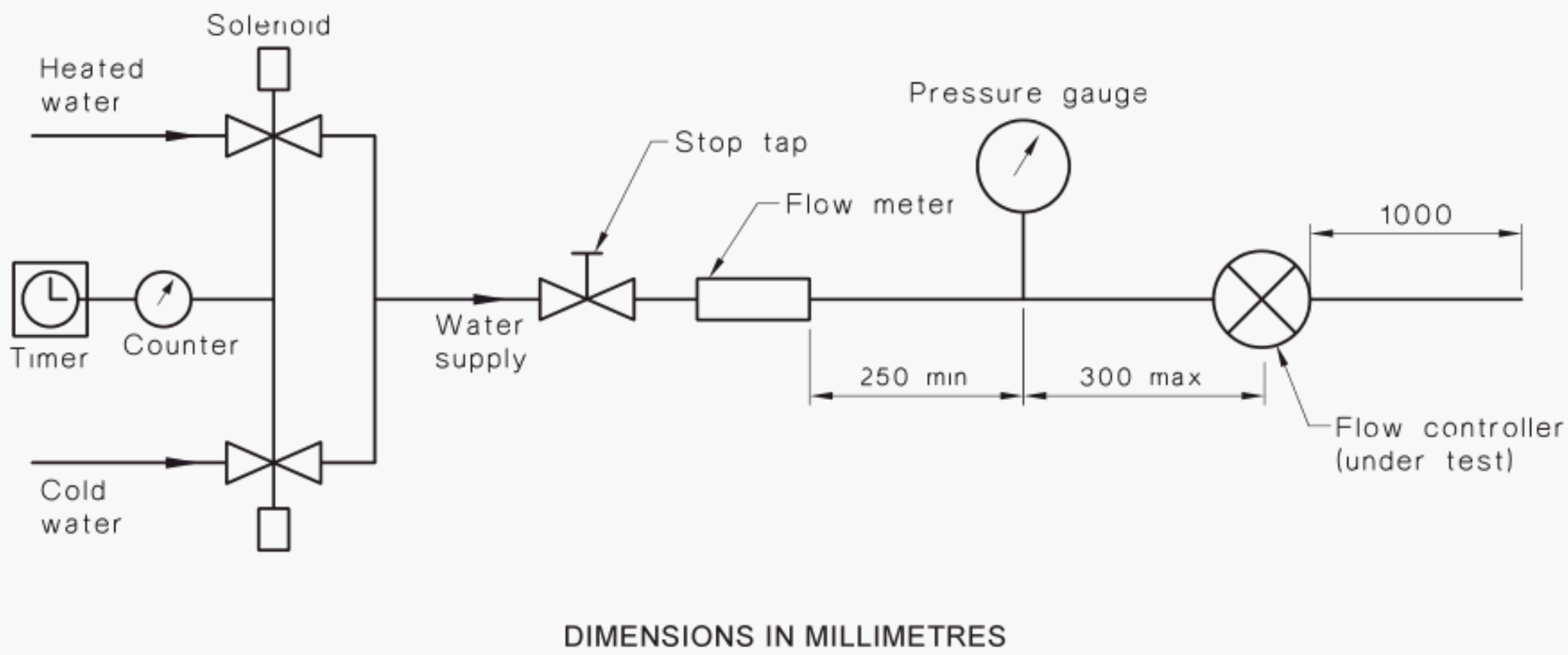

FIGURE Q1 TYPICAL TEST ARRANGEMENT FOR ENDURANCE TEST

COPYRIGHT

A2

APPENDIX R

DETERMINATION OF THE NOMINAL FLOW RATE OF TAPS AND TAP OUTLETS FOR USE WITH LOW AND UNEQUAL PRESSURES

(Normative)

R1 GENERAL

This Appendix sets out the method for determining the flow rates through taps and tap outlets for use in low and unequal pressures.

The test method herein shall be used as a basis for rating water efficiency of taps and tap outlets to AS/NZS 6400.

All tapware (tap and/or tap outlet, or mixer tap) shall be tested as supplied to assess the nominal flow rate when adjusted to its maximum flow.

R2 PRINCIPLE

The test sample to be tested is supported in a test rig and water is passed through the test sample at dynamic flow pressures of 35 kPa; when the flow rate has stabilized it is recorded.

R3 APPARATUS

The following apparatus is required:

(a) A water supply capable of delivering the required volumes at a temperature of 20 ±5°C and at a dynamic flow pressure of at least 150 kPa.

(b) Test apparatus made from Type B copper tube of diameter equal to the inlet size of the tap. The branch for flow pressure measurements shall be located at least 250 mm downstream of any valve or fitting. The tap outlet, mixer tap, or flow controller connection(s) shall be not more than 300 mm downstream of the flow pressure measurements.

(c) Pressure gauge having an accuracy of ±2% of the true value.

(d) Flow meter having an accuracy of ±2% of the true value.

NOTE: See Figure G1 for a typical test arrangement.

R4 PROCEDURE

The procedure shall be as follows:

(a) Install the test sample (tap and/or tap outlet, or mixer tap) as supplied by the manufacturer in the test rig with the inlet(s) connected to the water supply.

(b) The test sample operating mechanism or mechanisms or actuating valve(s) shall be adjusted to achieve the maximum flow at the outlet.

(c) Condition the test sample by allowing the water to flow through and then adjust the control valve gradually until the dynamic flow pressure of 150 kPa is achieved for at least 1 min.

(d) Gradually adjust the control valve to turn off the flow of water.

(e) Gradually adjust the control valve until the dynamic flow pressure of 35 ±1 kPa is achieved, allowing the flow and pressure to stabilize.

(f) Observe the flow meter and record the flow rate at that dynamic flow pressure.

COPYRIGHT

A2 (g) Gradually adjust the control valve to turn off the flow of water.

(h) Repeat Steps (e) to (g) to obtain a second reading of the flow rates.

(i) Calculate and record the average flow rate and record this value as the nominal flow rate.

R5 TEST REPORT

The following shall be reported:

(a) Manufacturer, brand name, model name and model number (if these are applicable) of the test sample (tap and/or tap outlet, or mixer tap).

(b) That the product tested is for use in low or unequal pressure applications only as defined in AS/NZS 3718.

(c) The nominal flow rate of the test sample (in litres per minute).

NOTE: The average flow rates as determined at Step (i) of Paragraph R4.

(d) Reference to this test method, i.e., AS/NZS 3718, Appendix R.

COPYRIGHT

AMENDMENT CONTROL SHEET

AS/NZS 3718:2005

Amendment No. 1 (2006)

REVISED TEXT

SUMMARY: This Amendment applies to Clauses 1.3.30 (new), 1.5, 1.6, 3.9, 3.10, 4.12.1.1, Appendices A, D, E, F, L and O.

Published on 17 May 2006.

Amendment No. 2 (2008)

REVISED TEXT

SUMMARY: This Amendment applies to the Preface, Clauses 1.1, 1.3.13, 1.3.30, 1.3.31 (new), 1.3.32 (new), 1.6.1, 1.6.2, 2.2.3(a), 2.3(a), 3.10(a), 4.4, 4.6.1 and 4.6.2 and Appendices A, B, E, G, K and R (new).

Published on 5 December 2008.

NOTES

NOTES

Standards Australia

Standards Australia is an independent company, limited by guarantee, which prepares and publishes most of the voluntary technical and commercial standards used in Australia. These standards are developed through an open process of consultation and consensus, in which all interested parties are invited to participate. Through a Memorandum of Understanding with the Commonwealth government, Standards Australia is recognized as Australia's peak national standards body.

Standards New Zealand

The first national Standards organization was created in New Zealand in 1932. The Standards Council of New Zealand is the national authority responsible for the production of Standards. Standards New Zealand is the trading arm of the Standards Council established under the Standards Act 1988.

Australian/New Zealand Standards

Under a Memorandum of Understanding between Standards Australia and Standards New Zealand, Australian/New Zealand Standards are prepared by committees of experts from industry, governments, consumers and other sectors. The requirements or recommendations contained in published Standards are a consensus of the views of representative interests and also take account of comments received from other sources. They reflect the latest scientific and industry experience. Australian/New Zealand Standards are kept under continuous review after publication and are updated regularly to take account of changing technology.

International Involvement

Standards Australia and Standards New Zealand are responsible for ensuring that the Australian and New Zealand viewpoints are considered in the formulation of international Standards and that the latest international experience is incorporated in national and Joint Standards. This role is vital in assisting local industry to compete in international markets. Both organizations are the national members of ISO (the International Organization for Standardization) and IEC (the International Electrotechnical Commission).

Visit our web sites

www.standards.org.au

www.standards.com.au

www.standards.co.nz

GPO Box 476 Sydney NSW 2001
Phone (02) 9237 6000
Fax (02) 9237 6010
Email mail@standards.org.au
Internet www.standards.org.au
SAI Global Customer Service
Phone 13 12 42
Fax 1300 65 49 49
Email sales@sai-global.com

Level 10 Radio New Zealand House
155 The Terrace Wellington 6001
(Private Bag 2439 Wellington 6020)
Phone (04) 498 5990
Fax (04) 498 5994
Customer Services (04) 498 5991
Information Service (04) 498 5992
Email snz@standards.co.nz
Internet www.standards.co.nz

ISBN 0 7337 6738 9

Printed in Australia

This page has been left intentionally blank.