AS/NZS 3123:2005

AS/NZS 3123:2005
Reconfirmed 2016

Australian/New Zealand Standard™

Approval and test specification—Plugs, socket-outlets and couplers for general industrial application

STANDARDS AUSTRALIA

STANDARDS NEW ZEALAND
Paerewa Aotearoa

This Joint Australian/New Zealand Standard was prepared by Joint Technical Committee EL-004, Electrical Accessories. It was approved on behalf of the Council of Standards Australia on 10 December 2004 and on behalf of the Council of Standards New Zealand on 17 December 2004.
This Standard was published on 23 February 2005.

The following are represented on Committee EL-004:

Australasian Railway Association
Australian Chamber of Commerce and Industry
Australian Electrical and Electronic Manufacturers Association
Canterbury Manufacturers Association, New Zealand
Consumer Electronic Suppliers Association
Consumers' Federation of Australia
Electrical Regulatory Authorities Council
Ministry of Economic Development (New Zealand)
National Electrical and Communications Association
Plastics Industry Pipe Association of Australia
Telarc New Zealand
Testing Interests (Australia)

STANDARDS AUSTRALIA/STANDARDS NEW ZEALAND

RECONFIRMATION

OF

AS/NZS 3123:2005

Approval and test specification—Plugs, socket-outlets and couplers for general industrial application

RECONFIRMATION NOTICE

Technical Committee EL-004 has reviewed the content of this publication and in accordance with Standards Australia procedures for reconfirmation, it has been determined that the publication is still valid and does not require change.

Certain documents referenced in the publication may have been amended since the original date of publication. Users are advised to ensure that they are using the latest versions of such documents as appropriate, unless advised otherwise in this Reconfirmation Notice.

Approved for reconfirmation in accordance with Standards Australia procedures for reconfirmation on 23 December 2015.

Approved for reconfirmation in New Zealand on behalf of the Standards Council of New Zealand on 18 May 2016.

The following are represented on Technical Committee EL-004:

NOTES

NOTES

PREFACE

This Standard was prepared by the Joint Standards Australia/Standards New Zealand Committee EL-004, Electrical Accessories, to supersede AS/NZS 3123:2000.

This Standard is one of a series of approval and test specifications issued by Standards Australia and Standards New Zealand. These specifications are to be read in conjunction with AS/NZS 3100, *Approval and test specification—General requirements for electrical equipment*. The purpose of these specifications is to outline the conditions to be met to secure approval for the sale and use of electrical equipment. Only safety matters and related conditions are covered.

This Standard is based on the principles, but not the format, of the IEC 60309, *Plugs, socket-outlets and couplers for industrial purposes* series. In this Standard, only standardized Australian and New Zealand configurations for operation at 50 Hz are included. In this respect, the Standard differs significantly from the IEC 60309 series in that the configurations of IEC 60309-2 *Plugs, socket-outlets and couplers for industrial purposes* Part 2: *Dimensional interchangeability requirements for pin and contact-tube accessories* are omitted.

While this Standard depicts only standardized Australian and New Zealand configurations, it can be applied to configurations and contact types other than those depicted herein, providing all appropriate requirements of this Standard are complied with.

The essential safety requirements in AS/NZS 3820 that could be applicable to plugs, socket-outlets and couplers for general industrial application are covered by this Standard taken in conjunction with any other relevant requirements affecting safety.

This Standard was revised to introduce the following technical and editorial changes—

(a) changes to fire test requirements; and

(b) updating of cross-references to referred Standards and other minor editorial changes.

In this Standard, the requirements proper appear in 'roman' type and the test requirements appear in '*italic*' type. Explanatory matters are contained in notes to the clauses, in smaller size 'roman' type.

This Standard does not contain all the necessary conditions of a contract.

CONTENTS

Page

1 SCOPE AND REFERENCED DOCUMENTS 4
2 DEFINITIONS 5
3 GENERAL REQUIREMENTS 7
4 GENERAL NOTES ON TESTS 7
5 RATING 7
6 CLASSIFICATION 8
7 MARKING 8
8 DIMENSIONS 11
9 PROTECTION AGAINST ELECTRIC SHOCK 12
10 PROVISION FOR EARTHING 12
11 TERMINALS 13
12 INTERLOCKS, RETAINING DEVICES AND SWITCHES 15
13 RESISTANCE TO ULTRAVIOLET RADIATION 15
14 GENERAL CONSTRUCTION 15
15 CONSTRUCTION OF SOCKET-OUTLETS 16
16 CONSTRUCTION OF PLUGS AND CONNECTORS 19
17 CONSTRUCTION OF APPLIANCE INLETS 20
18 IP DESIGNATION 20
19 INSULATION RESISTANCE AND ELECTRIC STRENGTH 21
20 BREAKING CAPACITY 21
21 MECHANICAL ENDURANCE 22
22 TEMPERATURE RISE 23
23 FLEXIBLE CABLES AND CORDS AND THEIR CONNECTION 24
24 MECHANICAL STRENGTH 27
25 SCREWS, CURRENT-CARRYING PARTS AND CONNECTIONS 28
26 CREEPAGE DISTANCES, CLEARANCES AND DISTANCES THROUGH SEALING COMPOUND 31
27 RESISTANCE TO HEAT, FIRE AND TRACKING 32
28 RESISTANCE TO RUSTING 33

STANDARDS AUSTRALIA/STANDARDS NEW ZEALAND

Australian/New Zealand Standard

Approval and test specification—Plugs, socket-outlets and couplers for general industrial application

1 SCOPE AND REFERENCED DOCUMENTS

1.1 Scope

This Standard sets out the requirements for plugs and socket-outlets, cable couplers and appliance couplers for operation at 50 Hz, with a rated voltage not exceeding 660 V and a rated current not exceeding 315 A, primarily intended for general industrial use, either indoors or outdoors.

NOTES:

1 This Standard applies to plugs and socket-outlets, cable couplers and appliance couplers (referred to in this Standard as 'accessories') for use when the ambient temperature does not normally exceed 40°C.

2 The use of accessories (see Note 1) in building sites and in agricultural, commercial and domestic situations is not precluded.

3 Appliance inlets incorporated in, or fixed to, electrical equipment are within the scope of this Standard.

4 This Standard does not apply to accessories that comply with AS/NZS 60320.1 and AS/NZS 3112 and which are primarily intended for domestic and similar general purposes, nor to accessories that comply with AS 2380.1 and are intended for explosive atmospheres.

5 The configurations shown in this Standard depict standardized Australian and New Zealand industrial plugs, socket-outlets, cable couplers and appliance couplers for operation at 50 Hz.

6 This Standard may be applied to configurations and contact types other than those depicted herein, providing all appropriate (to that type) requirements of this Standard are complied with.

7 Devices that comply with IEC 60309-1 are deemed to comply with the appropriate requirements of this Standard.

1.2 Referenced documents

The following documents are referred to in this Standard:

AS

2380 Electrical equipment for explosive atmospheres—Explosion-protection techniques

2380.1 Part 1: General requirements

60529 Degrees of protection provided by enclosures (IP Code)

AS/NZS

3100 Approval and test specification—General requirements for electrical equipment

3112 Approval and test specification—Plugs and socket-outlets

3133 Approval and test specification— Air break switches

3191 Electric flexible cords

3947 Low-voltage switchgear and controlgear

3947.3 Part 3: Switches, disconnectors, switch-disconnectors and fuse-combination units

COPYRIGHT

AS/NZS

5000	Electric cables—Polymeric insulated
5000.1	Part 1: For working voltages up to and including 0.6/1 (1.2) kV
5000.2	Part 2: For working voltages up to and including 450/750 V
5000.3	Part 3: Multicore control cables
60112	Method for the determination of the proof and the comparative tracking indices of solid insulating materials
60320	Appliance couplers for household and similar general purposes
60320.1	Part 1: General requirements
60335	Household and similar electrical appliances—Safety
60335.1	Part 1: General requirements

IEC

60309	Plugs, socket-outlets and couplers for industrial purposes
60309-1	Part 1: General requirements

2 DEFINITIONS

2.1 General

Where the terms 'voltage' and 'current' are used in this Standard, they imply the r.m.s. values.

2.2 Specific definitions

For the purpose of this Standard, the definitions below apply.

NOTE: The use of the accessories is shown in Figure 1.

2.2.1 *Accessories*

Plugs and socket-outlets, cable couplers and appliance couplers.

2.2.2 *Appliance coupler*

A means enabling the connection at will of a flexible cable to the equipment. It consists of the following two parts:

(a) *Appliance connector* The part integral with, or intended to be attached to, the flexible cable connected to the supply.

NOTE: This may also be a connector in accordance with the appropriate figures in this Standard.

(b) *Appliance inlet* The part incorporated in, or fixed to, the equipment or intended to be fixed to it.

2.2.3 *Basic insulation*

The insulation applied to live parts to provide basic protection against electric shock.

NOTE: Basic insulation does not necessarily include insulation used exclusively for functional purposes.

2.2.4 *Cable coupler*

A means of enabling the connection, at will, of two flexible cables. It consists of the following two parts:

(a) *Connector* The part integral with, or intended to be attached to, the flexible cable connected to the supply. In general, a connector has the same contact arrangement as a socket-outlet.

(b) *Plug* See Clause 2.2.10(b).

COPYRIGHT

2.2.5 *Double insulation*

Insulation comprising both basic insulation and supplementary insulation.

2.2.6 *Integral switching device*

A mechanical switching device constructed as a part of an accessory within the scope of this Standard.

2.2.7 *Interlock*

A device, either electrical or mechanical, that prevents the contacts of a plug from becoming live before it is in proper engagement with a socket-outlet or connector, and which either prevents the plug from being withdrawn while its contacts are live or makes the contacts dead before separation.

2.2.8 *Mechanical switching device*

A switching device designed to close and open one or more electric circuits by means of separable contacts.

2.2.9 *Non-rewireable plug or connector*

An accessory so constructed that the flexible cable cannot be separated from the accessory without making it permanently useless.

2.2.10 *Plug and socket-outlet*

A means enabling the connection at will of a flexible cable to fixed wiring. It consists of the following two parts:

(a) *Socket-outlet* The part intended to be installed with the fixed wiring.

(b) *Plug* The part integral with, or intended to be attached to, the flexible cable connected to the equipment or to a connector.

2.2.11 *Rated current*

The current assigned to the accessory by the maker in accordance with Clause 5.2.

2.2.12 *Rated voltage*

The voltage assigned to the accessory by the maker in accordance with Clause 5 and to which dielectric tests, clearances and creepage distances are referred.

2.2.13 *Reinforced insulation*

A single insulation system applied to live parts, which provides a degree of protection against electric shock equivalent to double insulation under the conditions specified in this Standard.

NOTE: The term 'insulation system' does not imply that the insulation is to be one homogeneous piece. It may comprise several layers which cannot be tested singly as supplementary or basic insulation.

2.2.14 *Retaining device*

A mechanical arrangement that holds a plug or connector in position when it is in proper engagement and prevents its unintentional withdrawal.

2.2.15 *Rewireable plug or connector*

An accessory so constructed that the flexible cable can be replaced.

2.2.16 *Supplementary insulation*

An independent insulation applied in addition to the basic insulation, in order to ensure protection against electric shock in the event of a failure of the basic insulation.

COPYRIGHT

2.2.17 *Switched socket-outlet*

A socket-outlet with an associated switching device to disconnect the supply from the socket-outlet contacts.

2.2.18 *Terminal*

A conductive part provided for the connection of one or more conductors to an accessory.

2.2.19 *Type test*

A test of one or more devices made to a certain design to show that the design meets certain specifications.

3 GENERAL REQUIREMENTS

Accessories shall be designed and constructed so that in normal use their performance is reliable and there is no danger to the user or surroundings.

In general, compliance is checked by carrying out all the specified tests.

4 GENERAL NOTES ON TESTS

4.1 Type of tests

Tests according to this Standard are type tests.

If a part of an accessory has previously passed tests for a given degree of severity, the relevant test shall not be repeated if the severity is not greater.

4.2 Sampling

Unless otherwise specified, the samples are tested as delivered and under normal conditions of use, at an ambient temperature of 20 ±5°C; the tests are made at rated frequency.

4.3 Order of tests

Unless otherwise specified, the tests are carried out in the order of the clauses of this Standard.

4.4 Number of samples

One sample is subjected to all the tests; however, separate samples may be used for the tests of Clauses 18, 24, 25, 27 and 28.

NOTES:

1 Attention is drawn to the additional 'new' plug required by Clause 15.

2 A sample of the matching accessory is required for test purposes.

4.5 Pass criteria

Accessories are deemed not to comply with this Standard if the sample fails any of the tests.

4.6 Conductors

When tests are carried out with conductors, they shall be copper and shall comply with either the AS/NZS 5000 series or AS/NZS 3191, as appropriate.

5 RATING

5.1 Rated voltages

The rated voltage shall be one of the following:

110 V, 250 V, 415 V, 440 V, 480 V, 500 V or 660 V.

NOTE: Configurations for 660 V types are not yet specified.

COPYRIGHT

5.2 Rated currents

The rated current shall be one of the following:

10 A, 20 A, 32 A, 40 A, 50 A, 63 A, 80 A, 100 A, 160 A, 200 A, 250 A or 315 A.

NOTE: Configurations for 250 A and 315 A types are not yet specified.

6 CLASSIFICATION

Accessories are classified as follows:

(a) *According to purpose—*

(i) plugs and socket-outlets;

(ii) cable couplers, i.e. connector and plug; or

(iii) appliance couplers, i.e. appliance connector and appliance inlet.

NOTE: See also Figure 1 for reference.

(b) According to the degree of protection provided by the enclosure in accordance with AS 60529, if applicable.

NOTE: The preferred degree of protection is IP56.

(c) *According to method of connecting the cable—*

(i) rewireable plugs and connectors; or

(ii) non-rewireable plugs and connectors.

(d) According to interlock facilities—

(i) accessories without interlock;

(ii) with or without integral switching device accessories with mechanical interlock; or

(iii) accessories with electrical interlock.

7 MARKING

7.1 General

Accessories shall be marked with the following:

(a) Rated current, in amperes, in accordance with the appropriate current rating specified in Table 1.

(b) Rated voltage, or rated voltages range, in volts, in accordance with the appropriate voltage rating specified in Table 1.

(c) Rated frequency (i.e. 50 Hz).

(d) Manufacturer's name or trademark.

(e) Manufacturer's type reference, or catalogue number.

(f) Designation for degree of protection in accordance with AS 60529, if applicable.

NOTE: Manufacturers making a statement of compliance with this Australia/New Zealand Standard on a product, packaging or promotional material related to that product are advised to ensure that such compliance is capable of being verified.

COPYRIGHT

7.2 Symbols

When symbols are used, they shall be as follows:

Name	*Symbol*
Ampere	A
Volt	V
Hertz	Hz
Degree of protection	IPXX
Earth	E or, ⏚

Until 12 months after publication of this Standard the symbol ⏚ may be used as the earth symbol.

IP classifications are defined in AS 60529.

7.3 Socket-outlets and appliance inlets

For socket-outlets and appliance inlets, the marking for rated current, rated frequency and maker's name or trademark shall be on—

(a) the main part;

(b) the outside of the enclosure; or

(c) the lid, if the lid cannot be removed without the aid of a tool.

Except for flush-type socket-outlets and appliance inlets, these markings shall be easily discernible when the accessory is mounted and wired as in normal use, if necessary after removal of the enclosure.

The marking for rated voltage and type reference and the symbol for degree of protection shall be visible after installation of the accessory, either on the outside of the enclosure or on the lid if the lid cannot be removed without the aid of a tool.

NOTE: The term 'main part' of a socket-outlet or an appliance inlet means the part carrying the contacts.

COPYRIGHT

TABLE 1

RATING, CONFIGURATIONS AND RELEVANT DIMENSIONS OF ACCESSORIES

1	2	3	4	5	6	7	8
Rating at 50 Hz		Standard Sheet number					
		Socket-outlets and connectors	Plugs and appliance inlets	Matching appliance coupler combinations			
				Type 1 (see Note 1)		Type 2 (see Note 2)	
Amperes	Volts			Appliance connector	Appliance inlet	Appliance connector	Appliance inlet
10, 20	250	1	2	16	15	1	2
10, 20	415 to 500	3	4	18	17	3	3
32	110	5	6	-	-	5	6
32	250	7	8	-	-	7	8
32, 40, 50	250†	-	-	20	19	-	-
32, 40, 50*	415 to 500†	9	10	20	19	9	10
50*, 63, 80	415 to 500	11	12	22	21	11	12
100, 160, 200	415 to 500	13	14	24	23	13	14
250	415 to 500	‡	‡	-	-	‡	‡
315	415 to 500	‡	‡	-	-	‡	‡

* See Note 3.

† Applies to Standard Sheets 19 and 20 only.

‡ Not yet specified.

NOTES:

1 Type 1 combinations use a dedicated appliance connector in combination with a dedicated appliance inlet in accordance with this Standard. The dedicated appliance connector will not accommodate a 'standard' plug.

2 Type 2 combinations use a 'common' connector which can accommodate an appliance inlet or standard plug in accordance with this Standard.

3 This Standard recognizes two '50 A, 415 to 500 V' systems. One system is the end of the 32 A/40 A/50 A, 415 to 500 V configuration range; the other is the commencement of the 50 A/63 A/80 A, 415-500 V configuration range, as detailed in the Standard Sheets.

7.4 Plugs and connectors

For plugs and connectors, the marking specified in this Clause 7 shall be easily discernible when the accessory is wired ready for use.

NOTE: The term 'ready for use' does not imply that the plug or connector is in engagement with its complementary accessory.

7.5 Rewireable accessories

For rewireable accessories, the terminals of contacts and pins shall be indicated as follows:

Terminal of contact or pin — *Indicator*

Single-phase active.....L or A (L is the preferred letter)

Multiphase active.....L1, L2 and L3

Neutral.....N

COPYRIGHT

Earthing.....E or ⏚ (preferably both in conjunction)

Ancillary.....C or C1, C2, etc.

Until 12 months after publication of this Standard the symbol ⏚ may be used as the earth symbol.

The symbols shall be placed on the insulating blocks, close to the relevant terminals. They shall not be placed on—

(a) screws;

(b) removable washers; or

(c) other removable parts.

7.6 Legibility and durability

Marking shall be legible and durable.

Compliance with the requirements of Clauses 7 to 7.6 is checked by inspection.

In addition, the marking is rubbed vigorously by hand for 15 s with a piece of cloth soaked in water and again for 15 s with a piece of cloth soaked in petroleum spirit.

NOTE: The petroleum spirit used should consist of a solvent hexane with a content of aromatics of maximum 0.1 volume percentage, a kauri-butanol value of 29, an initial boiling point of approximately 65°C, a dry-point of approximately 69EC and a specific gravity of approximately 0.68.

7.7 Literature available from the manufacturer

The manufacturer shall make available information detailing the range of cable sizes intended to be accommodated by the terminals of the accessory. In addition, for plugs and connectors, the manufacturer shall make available the size and type of flexible cord(s)/cable(s) intended to be accommodated and the stripping dimensions of sheathing and conductor insulation.

8 DIMENSIONS

8.1 General

Accessories shall comply with the Standard Sheets as specified in Table 1.

NOTES:

1 Attention is drawn to Notes 5 and 6 of Clause 1.

2 Pins of plugs and appliance inlets may incorporate a narrow slit and, if so, may exceed the specified dimension in the direction across the slit.

In any plug or appliance inlet, the length of the earth pin shall not be shorter than adjacent live pins by more than 1 mm.

Compliance is checked by measurement in accordance with the appropriate Standard Sheet.

8.2 Protection against improper connections

It shall not be possible to engage plugs with socket-outlets or connectors having lower ratings, or having fewer contact combinations. In addition, it shall not be possible to engage appliance connectors with appliance inlets having higher ratings, or having a larger number of contact combinations.

NOTE: Keyways may be used for this purpose.

In addition, the design shall be such that improper connections shall not be possible between—

(a) the earth and/or ancillary plug-pins and a live socket-contact, or a live plug-pin and the earth and/or ancillary socket-contact;

COPYRIGHT

(b) the phase plug-pin and the neutral socket-contact, if any; or

(c) a neutral plug-pin and phase socket-contact.

NOTE: The requirements of Items (a), (b) and (c) also apply to appliance inlets and appliance connectors.

Compliance is checked by inspection and, if necessary, by test.

8.3 Protection against single-pin or unintended connections

It shall not be possible to make single-pin or unintended connections between plugs and socket-outlets or connectors, or between appliance inlets and appliance connectors or socket-outlets.

Improper connections include single-pin, unintended connections or other connections that do not comply with the requirements for protection against electric shock.

Compliance is checked by inspection and, if necessary, by test.

9 PROTECTION AGAINST ELECTRIC SHOCK

9.1 Design

Accessories shall be designed so that live parts of—

(a) socket-outlets and connectors (when wired as in normal use); and

(b) plugs and appliance inlets (when in partial or complete engagement with the complementary accessories);

are not accessible to the standard test finger of AS/NZS 3100.

It shall not be possible to make contact between a pin of a plug or appliance inlet and a contact of a socket-outlet or connector while any live part is accessible to the standard test finger of AS/NZS 3100.

Compliance is checked by inspection and, if necessary, by a test on the sample(s) wired as in normal use.

The standard test finger of AS/NZS 3100 is applied in every possible position. An electrical indicator, with a voltage not less than 40 V, is used to show contact with the relevant part.

NOTE: Neutral contacts and ancillary contacts of socket-outlets and connectors are deemed to be live parts.

9.2 Earthing connection

Accessories shall be designed so that—

(a) when inserting the plug or connector, the earth connection is made before the phase connections and the neutral and ancillary connections, if any, are made; and

(b) when withdrawing the plug or connector, the phase connections and the neutral and ancillary connections, if any, are broken before the earth connection is broken.

Compliance is checked by inspection and, if necessary, by test.

10 PROVISION FOR EARTHING

10.1 Earthing connection

Accessories shall be provided with an earthing pin or contact which shall provide facility for direct connection of the earthing conductor.

10.2 Accessible metal parts

Accessible metal parts of accessories shall be directly and reliably earthed unless they are separated from live parts by double or reinforced insulation.

COPYRIGHT

Compliance with the requirements of Clauses 10 and 10.2 is checked by inspection and by conformance with the test of Clause 27.5 of AS/NZS 60335.1.

10.3 Prevention of overheating

Earthing contacts shall be capable of carrying a current equal to that specified for the phase contacts, without overheating.

Compliance is checked by the test of Clause 22.

10.4 Protection against mechanical damage

Earthing contacts shall be so shrouded or guarded that they are protected against mechanical damage.

NOTE: The use of side-earthing contacts is only permitted as a supplementary earthing means for the body of a metal-clad plug of rating ≥100 A.

11 TERMINALS

11.1 Types of fixings

Rewireable accessories shall be provided with terminals in which connection is made by means of screws, nuts or equally effective devices.

11.2 Construction

Parts of terminals, other than screws, nuts, washers, stirrups, clamping plates and the like, shall be of—

(a) copper; or

(b) an alloy containing at least 58% copper for parts that are worked cold or at least 50% copper for other parts; or

(c) other metal no less resistant to corrosion than copper and having mechanical and electrical properties suitable for the application.

Steel screws shall be adequately protected against corrosion.

Compliance is checked by the test of Clause 28.

11.3 Earthing terminal

If the body of an earthing terminal is not part of the metal frame or housing of the accessory, the body shall be of material as prescribed in Clause 11.2 for parts of terminals. If the body is part of the metal frame or housing, the clamping screw or nut shall be of such material.

If the body of the earthing terminal is part of a frame or housing of aluminium or aluminium alloy, precautions shall be taken to avoid the risk of corrosion resulting from contact between copper and aluminium or its alloys.

Compliance with the requirements of Clauses 11 to 11.3 is checked by inspection and, if necessary, by chemical analysis.

NOTE: The requirements regarding the avoidance of the risk of corrosion does not preclude the use of adequately coated metal screws or nuts.

11.4 Connection of conductor

Terminals shall allow the connection of conductors appropriate to the rating of the accessory and in accordance with the manufacturer's stated range of conductor sizes and types that can be accommodated.

Compliance is checked by inspection and by fitting conductors of the smallest and largest cross-sectional areas and types nominated by the manufacturer in accordance with Clause 7.7.

COPYRIGHT

11.5 Mechanical strength

Terminals shall have adequate mechanical strength.

Screws and nuts for clamping the conductors shall have a metric ISO thread or a thread comparable in pitch and mechanical strength, and shall comply with the appropriate tests of Clause 25.

11.6 Fixing to accessory

Terminals shall be securely fixed to the accessory and shall not work loose when the conductor clamping screws or nuts are tightened or loosened.

Screws and nuts for clamping the conductors shall not serve to fix any other component.

Compliance with the requirements of Clauses 11.5 and 11.6 is checked by inspection, by measurement, and by the test of Clause 25.1.

NOTES:

1 The clamping means for the conductor may be used to stop rotation or displacement of the plugs or socket contacts.

2 These requirements do not preclude terminals that are floating or terminals designed so that rotation or displacement of the terminal is prevented by the clamping screw or nut, provided that their movement is appropriately limited and does not impair the correct operation of the accessory.

3 Covering with sealing compound without other means of locking is deemed to be insufficient. Self-hardening resins may, however, be used to lock terminals that are not subject to torsion in normal use.

11.7 Clamping of conductor

Terminals shall be designed so that they clamp the conductor between metal surfaces with sufficient contact pressure and without significant damage to the conductor.

NOTE: Conductors are considered to be significantly damaged if they show deep or sharp indentations.

11.8 Loosening of clamping screws or nuts

Clamping screws or nuts of terminals shall be adequately secured against accidental loosening. It shall not be possible to loosen clamping screws or nuts without the aid of a tool.

11.9 Protection and segregation of terminals

Terminals shall be located or shielded so that—

(a) screws becoming loose from terminals cannot establish any electrical connection between live parts and metal parts connected to the earthing terminal or ancillary terminals;

(b) conductors becoming detached from live terminals of plugs and connectors cannot touch metal parts connected to the earthing terminal or ancillary terminals; and

(c) conductors becoming detached from the earthing terminal or ancillary terminals cannot touch live parts.

NOTE: Examples of ancillary terminals are those used for control or indicating purposes.

Compliance with the requirements of Clauses 11.8 and 11.9 is checked by inspection and by manual test.

11.10 Prevention of improper contact

When the conductors have been correctly fitted, there shall be no risk of accidental contact between live parts of different polarity or between such parts and accessible metal parts, and, should a conductor strand escape from a terminal, there shall be no risk that the strand emerges from the enclosure.

COPYRIGHT

11.5 Mechanical strength

Terminals shall have adequate mechanical strength.

Screws and nuts for clamping the conductors shall have a metric ISO thread or a thread comparable in pitch and mechanical strength, and shall comply with the appropriate tests of Clause 25.

11.6 Fixing to accessory

Terminals shall be securely fixed to the accessory and shall not work loose when the conductor clamping screws or nuts are tightened or loosened.

Screws and nuts for clamping the conductors shall not serve to fix any other component.

Compliance with the requirements of Clauses 11.5 and 11.6 is checked by inspection, by measurement, and by the test of Clause 25.1.

NOTES:

1 The clamping means for the conductor may be used to stop rotation or displacement of the plugs or socket contacts.

2 These requirements do not preclude terminals that are floating or terminals designed so that rotation or displacement of the terminal is prevented by the clamping screw or nut, provided that their movement is appropriately limited and does not impair the correct operation of the accessory.

3 Covering with sealing compound without other means of locking is deemed to be insufficient. Self-hardening resins may, however, be used to lock terminals that are not subject to torsion in normal use.

11.7 Clamping of conductor

Terminals shall be designed so that they clamp the conductor between metal surfaces with sufficient contact pressure and without significant damage to the conductor.

NOTE: Conductors are considered to be significantly damaged if they show deep or sharp indentations.

11.8 Loosening of clamping screws or nuts

Clamping screws or nuts of terminals shall be adequately secured against accidental loosening. It shall not be possible to loosen clamping screws or nuts without the aid of a tool.

11.9 Protection and segregation of terminals

Terminals shall be located or shielded so that—

(a) screws becoming loose from terminals cannot establish any electrical connection between live parts and metal parts connected to the earthing terminal or ancillary terminals;

(b) conductors becoming detached from live terminals of plugs and connectors cannot touch metal parts connected to the earthing terminal or ancillary terminals; and

(c) conductors becoming detached from the earthing terminal or ancillary terminals cannot touch live parts.

NOTE: Examples of ancillary terminals are those used for control or indicating purposes.

Compliance with the requirements of Clauses 11.8 and 11.9 is checked by inspection and by manual test.

11.10 Prevention of improper contact

When the conductors have been correctly fitted, there shall be no risk of accidental contact between live parts of different polarity or between such parts and accessible metal parts, and, should a conductor strand escape from a terminal, there shall be no risk that the strand emerges from the enclosure.

COPYRIGHT

14.2 Accessible surfaces

Accessible surfaces of accessories shall be free from burrs, flashes and similar sharp edges.

Compliance is checked by inspection.

14.3 Screws

Any screw used to make an earth connection shall not be used for any other purpose except in the case whereby an internal earthing connection is established automatically and in a reliable way.

Compliance is checked by inspection and if necessary in accordance with Clause 10.3.

14.4 Position of earthing or neutral contact or pin

It shall not be possible for the user to alter the position of any earth or neutral contact, or pin.

Compliance is checked by manual means to ensure that only the correct mounting position is maintained.

14.5 Material suitability for conditions of use

Accessories shall be suitable for the conditions of use as required by AS/NZS 3100.

15 CONSTRUCTION OF SOCKET-OUTLETS

15.1 Socket-outlet and plug contact

15.1.1 *General*

The force exerted between the socket-outlet contacts and plug pins shall not be so great as to prevent easy insertion and withdrawal of the plug.

Compliance is checked by conducting the test of either Clause 15.1.2 or Clause 15.1.3, to determine the force necessary to withdraw an appropriate 'new' plug, complying with the dimensional requirements of this Standard, from a socket-outlet.

15.1.2 *Withdrawal force test*

By manual means, the plug shall be fully inserted into and withdrawn 10 times from a socket-outlet complying with the appropriate Standard Sheet of this Standard. The plug shall be reinserted into the socket-outlet and shall be mounted so that the axes of the contact tubes are vertical with the contact openings, downwards. A typical test apparatus is shown in Figure 2.

The principal weight, together with the supplementary weight (the latter being such that it exerts a force equal to one-tenth of the force exerted by the principal weight) and the 'test plug', exert a force equal to the maximum withdrawal force shown in Table 2.

The principal weight and the supplementary weight are hung without jolting on the test plug. If the test plug is not completely withdrawn, the supplementary weight is raised 50 mm and then allowed to fall onto the principal weight.

The plug shall not remain in the sample.

NOTE: During this test any retaining device shall be disengaged.

COPYRIGHT

TABLE 2

MAXIMUM WITHDRAWAL FORCE

Rated current of the accessory A	Maximum withdrawal force N
≤20	125
>20, ≤50	150
>50, ≤80	275
>80, ≤315	400

15.1.3 *Alternative withdrawal force test*

By manual means, the plug shall be fully inserted into and withdrawn 10 times from a socket-outlet complying with the appropriate Standard Sheet of this Standard. Manually align the plug in the socket-outlet to minimize the effects of misalignment between mating components and any other friction-increasing factors, so as to attain the best practical position for minimum resistance to withdrawal.

NOTE: When testing in other than the horizontal plane, the mass of the plug and socket-outlet requires to be considered in all measurements.

The plug is then fully inserted and a withdrawal force gradually applied by any suitable means until the plug is withdrawn. The withdrawal force, during three subsequent and consecutive disengagements, shall be measured.

The withdrawal forces so measured shall not exceed the maximum withdrawal force specified in Table 2.

NOTE: During this test any retaining device shall be disengaged.

15.1.4 *Contact pressure*

Contacts shall be designed so as to provide and maintain adequate contact pressure when completely engaged with the corresponding plug pin.

Compliance is checked by the temperature-rise test of Clause 22.

Socket-outlet contacts shall be floating and shall be self-adjusting so as to ensure and maintain adequate contact pressure.

Compliance is checked by inspection and by the following test:

The sample is mounted so that the axes of the contact tubes are vertical with the contact openings, downwards.

A gauge of hardened steel with a finish of 1.6 μm (N7) and free from grease, having the dimensions shown in Table 3, is inserted into each contact tube, also free from grease, and the force necessary to withdraw the gauge is measured.

The sum of the force and the weight of the gauge shall be not less than the minimum total force shown in Table 3.

COPYRIGHT

TABLE 3

MINIMUM TOTAL FORCE

Nominal pin diameter mm	Gauge	
	Diameter of gauge* mm	Minimum total force N
4.0	3.9	2.5
5.6	5.5	5
6.4	6.3	5
8.0	7.9	10
9.5	9.4	15
12.7	12.6	20

* The tolerance on all gauges is $^{0}_{-0.01}$ mm.

15.2 Construction

Socket-outlets shall be constructed so as to permit—

(a) the conductors to be easily introduced into the terminals and secured therein;

(b) the correct positioning of the conductors, without their insulation coming into contact with live parts of a polarity different from that of the conductor; and

(c) the covers of enclosures to be fixed easily after connection of the conductors.

15.3 Parts providing protection

Parts providing protection against electric shock shall have adequate mechanical strength. They shall be securely fixed in such a way that they will not work loose in normal use. It shall not be possible to remove these parts without the aid of a tool.

15.4 Cable entries

Cable entries shall allow the introduction of the conduit or the protective covering of the cable so as to afford complete mechanical protection.

Compliance with the requirements of Clauses 15.2 to 15.4 is checked by inspection and by an installation test with conductors of the largest cross-sectional area specified in Clause 11.4.

15.5 Insulating linings, barriers and the like

Insulating linings, barriers and the like shall have adequate mechanical strength. They shall be fixed to the metal casing, or the body, in such a way that they cannot be removed without being seriously damaged, or shall be designed so that they cannot be replaced in an incorrect position.

Compliance is checked by inspection and by the tests of Clause 24.

15.6 Protected socket-outlets

Protected socket-outlets with an IP classification shall maintain that classification without a plug in position. In addition, they shall incorporate means for maintaining the degree of protection when a plug is completely engaged.

The means for achieving the required degree of protection shall be securely fixed to the socket-outlet.

COPYRIGHT

TABLE 3

MINIMUM TOTAL FORCE

Nominal pin diameter mm	Gauge	
	Diameter of gauge* mm	Minimum total force N
4.0	3.9	2.5
5.6	5.5	5
6.4	6.3	5
8.0	7.9	10
9.5	9.4	15
12.7	12.6	20

* The tolerance on all gauges is $^{0}_{-0.01}$ mm.

15.2 Construction

Socket-outlets shall be constructed so as to permit—

(a) the conductors to be easily introduced into the terminals and secured therein;

(b) the correct positioning of the conductors, without their insulation coming into contact with live parts of a polarity different from that of the conductor; and

(c) the covers of enclosures to be fixed easily after connection of the conductors.

15.3 Parts providing protection

Parts providing protection against electric shock shall have adequate mechanical strength. They shall be securely fixed in such a way that they will not work loose in normal use. It shall not be possible to remove these parts without the aid of a tool.

15.4 Cable entries

Cable entries shall allow the introduction of the conduit or the protective covering of the cable so as to afford complete mechanical protection.

Compliance with the requirements of Clauses 15.2 to 15.4 is checked by inspection and by an installation test with conductors of the largest cross-sectional area specified in Clause 11.4.

15.5 Insulating linings, barriers and the like

Insulating linings, barriers and the like shall have adequate mechanical strength. They shall be fixed to the metal casing, or the body, in such a way that they cannot be removed without being seriously damaged, or shall be designed so that they cannot be replaced in an incorrect position.

Compliance is checked by inspection and by the tests of Clause 24.

15.6 Protected socket-outlets

Protected socket-outlets with an IP classification shall maintain that classification without a plug in position. In addition, they shall incorporate means for maintaining the degree of protection when a plug is completely engaged.

The means for achieving the required degree of protection shall be securely fixed to the socket-outlet.

COPYRIGHT

16.7 Protected plugs

Protected plugs with an IP classification, when fitted with a flexible cable as in normal use, shall incorporate means for maintaining the degree of protection when in complete engagement with the complementary accessory.

The means of ensuring the required degree of protection shall be securely fixed to the plug.

Compliance is checked by inspection and by the tests of Clauses 18 and 19.

16.8 Protected connectors

Protected connectors with an IP classification shall maintain that classification when fitted with a flexible cable as in normal use and when not in engagement with the complementary accessory. In addition, they shall incorporate means for maintaining the degree of protection when in complete engagement with the complementary accessory.

19 INSULATION RESISTANCE AND ELECTRIC STRENGTH

19.1 General

The insulation resistance and the electric strength of accessories shall be adequate.

Compliance is checked by the tests of Clauses 19.2 and 19.3, which are made immediately after the test of Clause 18, if applied, and after reassembly of covers that may have been removed.

NOTE: For the purpose of these tests, the neutral contact and the control contact are each considered as a pole.

19.2 Insulation resistance test

The accessory shall be subjected to the insulation resistance test of AS/NZS 3100 and shall comply with the requirements thereof.

19.3 High voltage (electric strength) test

The accessory shall be subjected to the high voltage (electric strength) test of AS/NZS 3100 and shall comply with the requirements thereof, except that the tests between live parts and the tests for equipment with earthing facilitites shall be conducted at 2 kV for accessories rated at equal to or greater than 415 V and equal to or less than 500 V.

(ii) *For accessories rated at 240 V or 250 V, the test voltage shall be 250 V.*

(iii) *For accessories rated at 110 V or 125 V, the test voltage shall be 125 V.*

(iv) *At the marked current rating.*

(v) *With an inductive load adjusted to give a power factor of 0.75 lagging; or if an accessory is marked with a more arduous power factor, at that more arduous power factor.*

(vi) *With any control circuits energized at 500 V, 2 A, 0.75 lagging power factor.*

A cycle is composed of an insertion and a withdrawal.

The test is made using the connections shown in Figure 3, all poles being energized simultaneously, except that for accessories having a rated voltage of 380 V to 415 V, the metal support is permanently connected to the neutral. In all other cases, for two-pole accessories, the selector switch C, connecting the metal support and the accessible metal parts to one of the poles of the supply, is operated after half the number of cycles; for three-pole accessories, the selector switch C is operated after one-third of the number of cycles and again after two-thirds of the number of cycles so as to connect each pole in turn.

Load resistors and inductors are not connected in parallel. However, if an air-core inductor is used, a damping resistor taking approximately 1% of the current through the inductor is connected in parallel with it. Iron-core inductors may be used, provided the current has substantial sine-wave form.

During the test, no sustained arcing shall occur.

After the test, the samples shall show no damage impairing their further use and the entry holes for the plug contacts shall not show any serious damage. In addition, the insulation resistance test of Clause 19.2 and the high voltage test of Clause 19.3 shall be conducted and the accessories shall comply with the requirements stated therein.

21 MECHANICAL ENDURANCE

21.1 General

(c) *no damage to the entry holes for the plug pins that might impair proper working; and*

(d) *no loosening of electrical or mechanical connections.*

The samples shall then withstand a high voltage test conducted in accordance with Clause 19.

21.3 Lid spring test

Lid springs are tested by completely opening and closing the lid, the number of times the lid is opened being the same as the number of insertions of the plug specified in Clause 21.2.

At the conclusion of the test, the lid shall still be capable of functioning in the normal manner.

NOTE: This test may be combined with the test of Clause 21.2.

22 TEMPERATURE RISE

Accessories shall be constructed so that the temperature rise in normal use is not excessive.

Compliance is checked by the following test, which is made on socket-outlets and connectors with the corresponding plugs inserted:

Rewireable accessories are fitted with conductors of a cross-sectional area as specified in Table 4. However, where any accessory is too small to accommodate the conductor cross-sectional area as specified, the accessory under test shall be tested with a smaller cross-sectional area conductor being the largest able to be accommodated; the terminal screws or nuts being tightened with a torque equal to two-thirds of that specified in Clause 25.

NOTE: 1 mm^2 cross-sectional area conductors are used for ancillary contacts.

For the purpose of this test, a length of a least 2 m of the cable is connected to the terminals.

Non-rewireable accessories are tested as delivered.

For accessories having three or more poles, the current during the test shall be passed through the phase contacts. If there is a neutral contact, a separate test shall be carried out passing current through the neutral contact and the adjacent phase contact.

A further separate test shall be carried out passing current through the earthing contact and the nearest phase contact.

A current of 2 A shall be passed through the ancillary contact, if any, during all of these tests.

The test is conducted until stable temperatures are attained.

The temperature is determined by means of melting particles, colour changing indicators, or thermocouples, which are chosen and positioned so that they have negligible effect on the temperature being determined.

The temperature rise of terminals and contact tubes shall not exceed 50°C.

After the test, the conductors shall be examined in accordance with Clause 11.7.

COPYRIGHT

TABLE 4

SIZE OF CONDUCTORS AND TEST CURRENTS FOR TEMPERATURE RISE TEST

1	2	3	4
Rated current of the accessory	Test current	Cross-sectional area of the conductor	
		Plugs and connectors	Socket-outlets and appliance inlets
A	A	mm^2	mm^2
10	10	1	1.5
20	20	2.5	4
32	32	6	10
40	40	10	10
50	50	16	25
63	63	16	35
80	80	25	50
100	100	35	50
160	160	70	95
200	200	95	120
250	250	120	150
315	315	185	240

23 FLEXIBLE CABLES AND CORDS AND THEIR CONNECTION

23.1 Non-rewireable plugs and connectors

Non-rewireable plugs and non-rewireable connectors shall be provided with a flexible cable or a cord complying with the AS/NZS 5000 series or AS/NZS 3191, as appropriate.

The flexible cable or cord shall not be lighter than the types specified in Table 5.

The core connected to the earthing terminal shall be identified by the colour combination green/yellow. The nominal cross-sectional area of the earthing conductor and of the neutral conductor, if any, shall be at least equal to that of the phase conductors.

The ancillary conductor, if any, shall have a nominal cross-sectional area of at least 1.5 mm^2.

Compliance is checked by inspection and by measurement.

23.2 Cable anchorage

Plugs and connectors shall be provided with a cable anchorage such that the conductors are relieved from strain, including twisting, where they are connected to the terminals or terminations, and that their covering is protected from abrasion.

Cable anchorages shall be designed so that the cable cannot touch accessible unearthed metal parts, or internal metal parts, such as cable-anchorage screws, if these are electrically connected to accessible unearthed metal parts.

COPYRIGHT

TABLE 5

MINIMUM NOMINAL CROSS-SECTIONAL AREA OF FLEXIBLE CABLES AND CORDS

Rated current of the accessory A	Type of cable or cord	Nominal cross-sectional area mm^2
10	Heavy duty PVC or elastomeric insulated and sheathed flexible cord	1
20		2.5
32	PVC or elastomeric insulated and sheathed cable or flexible cable	6
40		10
50	PVC or elastomeric insulated and sheathed cable	16
63		16
80		25
100		35
160		70
200		95
250		120
315		185

23.3 Rewireable plugs and connectors

For rewireable plugs and rewireable connectors—

(a) it shall be clear how the relief from strain and the prevention of twisting is intended to be effected;

(b) cable anchorages shall present no sharp edges to the cable;

(c) makeshift methods, such as tying the cable into a knot or tying the ends with string, shall not be used; and

(d) cable anchorages and cable inlets shall be suitable for the type(s) and size(s) of flexible cable(s) for which the accessory is intended.

If a cable inlet is provided with a sleeve to prevent damage to the cable, this sleeve shall be of insulating material and shall be smooth and free from burrs.

If a bell-mouthed opening is provided, the diameter at the end shall be at least 1.5 times the diameter of the cable with the largest cross-sectional area to be connected (see Clause 11.4).

NOTE: Helical metal springs, whether bare or covered with insulating material, are not allowed as cable sleeves.

Compliance with the requirements of Clauses 23.2 and 23.3 is checked by inspection and by the test of Clause 23.4.

23.4 Plugs and connectors provided with flexible cables and flexible cords

Plugs and connectors provided with a flexible cable or flexible cord are subjected to a pull test in an apparatus similar to that shown in Figure 4, followed by a torque test.

Non-rewireable accessories are tested as delivered.

Rewireable accessories are tested first with one and then with the other type of cable, complying with the AS/NZS 5000 series or AS/NZS 3191, as appropriate, as specified in Table 6.

COPYRIGHT

Conductors of the cable for rewireable accessories are introduced into the terminals, the terminal screws being tightened just sufficiently to prevent the conductors from easily changing their position.

The cable anchorage is used in the normal way, clamping screws being tightened with a torque equal to two-thirds of that specified in Clause 25. After reassembly of the sample, with cable glands, if any, in position, the component parts shall fit snugly and it shall not be possible to push the cable into the sample to any appreciable extent.

The sample is fixed in the test apparatus so that the axis of the cable is vertical where it enters the sample.

The cable is then subjected 100 times to a pull of the value shown in Table 7. Each pull is applied without jerks and has a duration of 1 s.

Immediately afterwards, the cable is subjected for 1 min to a torque of the value shown in Table 7.

During the tests, the cable shall not be damaged.

After the tests, the cable shall not have been displaced by more than 2 mm. For rewireable accessories, the ends of the conductors shall not have moved noticeably in the terminals; for non-rewireable accessories, there shall be no break in the electrical connections.

For the measurement of the longitudinal displacement, a mark is made on the cable while it is subjected to the pull, at a distance of approximately 2 cm from the end of the sample or the cable anchorage, before starting the tests. If, for non-rewireable accessories, there is no definite end to the sample, an additional mark is made on the body of the sample.

After the tests, the displacement of the mark on the cable in relation to the sample or the cable anchorage is measured while the cable is subjected to the pull.

TABLE 6

TYPES OF CABLES FOR PULL TEST

1	2	3
Rated current of the accessory A	**Type of cable or cord**	**Nominal cross-sectional area mm^2**
10, 20	PVC insulated and sheathed 3-core heavy duty flexible cord	1.0
	PVC insulated and sheathed 3-core heavy duty flexible cord	2.5
32	Elastomeric insulated and sheathed 3-core or 4-core circular flexible cable	6
40, 50	Elastomeric insulated and sheathed 3-core or 4-core circular flexible cord	10
63, 80	Elastomeric insulated and sheathed 3-core or 4-core circular flexible cable	16
	Elastomeric insulated and sheathed 3-core or 4-core circular flexible cable	25
100, 160, 200	Elastomeric insulated and sheathed 3-core or 4-core circular flexible cable	35
	Elastomeric insulated and sheathed 3-core or 4-core circular flexible cable	95
250	Elastomeric insulated and sheathed 3-core or 4-core circular flexible cable	120
315	Elastomeric insulated and sheathed 3-core or 4-core circular flexible cable	185

COPYRIGHT

TABLE 7

TEST VALUES FOR CORD PULL TEST

Rated current of the accessory A		Pull N	Torque N.m
	≤ 20	80	0.4
> 20	≤ 50	100	0.5
> 50	≤ 80	120	0.8
> 80	≤ 200	200	1.5
>200		400	3.0

24 MECHANICAL STRENGTH

24.1 General

Accessories shall have adequate mechanical strength.

Compliance is checked by the appropriate tests of Clauses 24.2 to 24.5 as follows:

(a) *For socket-outlets and appliance inlets* ..... *Clause 24.2.*

(b) *For rewireable plugs and connectors* ..... *Clause 24.3.*

(c) *For non-rewireable plugs and connectors* ..... *Clauses 24.3 and 24.4.*

(d) *For glands of accessories with an IP classification*..... *Clause 24.5.*

Before starting the tests of Clause 24.2 or 24.3, accessories with enclosures of resilient or thermoplastic material are placed with their bases or flexible cables, in a refrigerator at a temperature of –15 ±2°C for at least 16 h. They are then removed from the refrigerator and immediately subjected to the tests of Clause 24.2 or 24.3, as appropriate.

24.2 Impact hammer test for socket-outlets and appliance inlets

Socket-outlets and appliance inlets shall be subjected to, and shall comply with, the mechanical strength tests of AS/NZS 60335.1.

In addition, protected accessories with an IP classification shall withstand the relevant treatment specified in Clause 18.

24.3 Tests for plugs and connectors

Rewireable accessories are fitted with the lightest type of flexible cable of the smallest cross-sectional area specified in Clause 23.4.

Non-rewireable accessories are tested as delivered.

The free end of the cable, which is about 2.25 m long, is fixed to a wall at a height of 750 mm above the floor, as shown in Figure 5.

The sample is held so that the cable is horizontal and then it is allowed to fall onto a concrete floor. This is done eight times, the cable being rotated through 45° at its fixing each time.

After the tests, the samples shall show no damage within the meaning of this Standard; in particular, no part shall have become detached or loosened.

In addition, protected accessories with an IP classification shall also withstand the relevant treatment specified in Clause 18.

NOTE: Chips and dents that adversely affect the protection against electric shock, moisture or corrosion constitute a failure.

COPYRIGHT

TABLE 7

TEST VALUES FOR CORD PULL TEST

Rated current of the accessory A		Pull N	Torque N.m
	≤ 20	80	0.4
> 20	≤ 50	100	0.5
> 50	≤ 80	120	0.8
> 80	≤ 200	200	1.5
>200		400	3.0

24 MECHANICAL STRENGTH

24.1 General

Accessories shall have adequate mechanical strength.

Compliance is checked by the appropriate tests of Clauses 24.2 to 24.5 as follows:

(a) *For socket-outlets and appliance inlets* ..... *Clause 24.2.*

(b) *For rewireable plugs and connectors* ..... *Clause 24.3.*

(c) *For non-rewireable plugs and connectors* ..... *Clauses 24.3 and 24.4.*

(d) *For glands of accessories with an IP classification*..... *Clause 24.5.*

Before starting the tests of Clause 24.2 or 24.3, accessories with enclosures of resilient or thermoplastic material are placed with their bases or flexible cables, in a refrigerator at a temperature of –15 ±2°C for at least 16 h. They are then removed from the refrigerator and immediately subjected to the tests of Clause 24.2 or 24.3, as appropriate.

24.2 Impact hammer test for socket-outlets and appliance inlets

Socket-outlets and appliance inlets shall be subjected to, and shall comply with, the mechanical strength tests of AS/NZS 60335.1.

In addition, protected accessories with an IP classification shall withstand the relevant treatment specified in Clause 18.

24.3 Tests for plugs and connectors

Rewireable accessories are fitted with the lightest type of flexible cable of the smallest cross-sectional area specified in Clause 23.4.

Non-rewireable accessories are tested as delivered.

The free end of the cable, which is about 2.25 m long, is fixed to a wall at a height of 750 mm above the floor, as shown in Figure 5.

The sample is held so that the cable is horizontal and then it is allowed to fall onto a concrete floor. This is done eight times, the cable being rotated through 45° at its fixing each time.

After the tests, the samples shall show no damage within the meaning of this Standard; in particular, no part shall have become detached or loosened.

In addition, protected accessories with an IP classification shall also withstand the relevant treatment specified in Clause 18.

NOTE: Chips and dents that adversely affect the protection against electric shock, moisture or corrosion constitute a failure.

COPYRIGHT

TABLE 7

TEST VALUES FOR CORD PULL TEST

Rated current of the accessory A		Pull N	Torque N.m
	≤ 20	80	0.4
> 20	≤ 50	100	0.5
> 50	≤ 80	120	0.8
> 80	≤ 200	200	1.5
>200		400	3.0

24 MECHANICAL STRENGTH

24.1 General

Accessories shall have adequate mechanical strength.

Compliance is checked by the appropriate tests of Clauses 24.2 to 24.5 as follows:

(a) *For socket-outlets and appliance inlets* ..... *Clause 24.2.*

(b) *For rewireable plugs and connectors* ..... *Clause 24.3.*

(c) *For non-rewireable plugs and connectors* ..... *Clauses 24.3 and 24.4.*

(d) *For glands of accessories with an IP classification*..... *Clause 24.5.*

Before starting the tests of Clause 24.2 or 24.3, accessories with enclosures of resilient or thermoplastic material are placed with their bases or flexible cables, in a refrigerator at a temperature of –15 ±2°C for at least 16 h. They are then removed from the refrigerator and immediately subjected to the tests of Clause 24.2 or 24.3, as appropriate.

24.2 Impact hammer test for socket-outlets and appliance inlets

Socket-outlets and appliance inlets shall be subjected to, and shall comply with, the mechanical strength tests of AS/NZS 60335.1.

In addition, protected accessories with an IP classification shall withstand the relevant treatment specified in Clause 18.

24.3 Tests for plugs and connectors

Rewireable accessories are fitted with the lightest type of flexible cable of the smallest cross-sectional area specified in Clause 23.4.

Non-rewireable accessories are tested as delivered.

The free end of the cable, which is about 2.25 m long, is fixed to a wall at a height of 750 mm above the floor, as shown in Figure 5.

The sample is held so that the cable is horizontal and then it is allowed to fall onto a concrete floor. This is done eight times, the cable being rotated through 45° at its fixing each time.

After the tests, the samples shall show no damage within the meaning of this Standard; in particular, no part shall have become detached or loosened.

In addition, protected accessories with an IP classification shall also withstand the relevant treatment specified in Clause 18.

NOTE: Chips and dents that adversely affect the protection against electric shock, moisture or corrosion constitute a failure.

COPYRIGHT

TABLE 7

TEST VALUES FOR CORD PULL TEST

Rated current of the accessory A		Pull N	Torque N.m
	≤ 20	80	0.4
> 20	≤ 50	100	0.5
> 50	≤ 80	120	0.8
> 80	≤ 200	200	1.5
>200		400	3.0

24 MECHANICAL STRENGTH

24.1 General

Accessories shall have adequate mechanical strength.

Compliance is checked by the appropriate tests of Clauses 24.2 to 24.5 as follows:

(a) *For socket-outlets and appliance inlets* ..... *Clause 24.2.*

(b) *For rewireable plugs and connectors* ..... *Clause 24.3.*

(c) *For non-rewireable plugs and connectors* ..... *Clauses 24.3 and 24.4.*

(d) *For glands of accessories with an IP classification*..... *Clause 24.5.*

Before starting the tests of Clause 24.2 or 24.3, accessories with enclosures of resilient or thermoplastic material are placed with their bases or flexible cables, in a refrigerator at a temperature of –15 ±2°C for at least 16 h. They are then removed from the refrigerator and immediately subjected to the tests of Clause 24.2 or 24.3, as appropriate.

24.2 Impact hammer test for socket-outlets and appliance inlets

Socket-outlets and appliance inlets shall be subjected to, and shall comply with, the mechanical strength tests of AS/NZS 60335.1.

In addition, protected accessories with an IP classification shall withstand the relevant treatment specified in Clause 18.

24.3 Tests for plugs and connectors

Rewireable accessories are fitted with the lightest type of flexible cable of the smallest cross-sectional area specified in Clause 23.4.

Non-rewireable accessories are tested as delivered.

The free end of the cable, which is about 2.25 m long, is fixed to a wall at a height of 750 mm above the floor, as shown in Figure 5.

The sample is held so that the cable is horizontal and then it is allowed to fall onto a concrete floor. This is done eight times, the cable being rotated through 45° at its fixing each time.

After the tests, the samples shall show no damage within the meaning of this Standard; in particular, no part shall have become detached or loosened.

In addition, protected accessories with an IP classification shall also withstand the relevant treatment specified in Clause 18.

NOTE: Chips and dents that adversely affect the protection against electric shock, moisture or corrosion constitute a failure.

COPYRIGHT

TABLE 7

TEST VALUES FOR CORD PULL TEST

Rated current of the accessory A		Pull N	Torque N.m
	≤ 20	80	0.4
> 20	≤ 50	100	0.5
> 50	≤ 80	120	0.8
> 80	≤ 200	200	1.5
>200		400	3.0

24 MECHANICAL STRENGTH

24.1 General

Accessories shall have adequate mechanical strength.

Compliance is checked by the appropriate tests of Clauses 24.2 to 24.5 as follows:

(a) *For socket-outlets and appliance inlets* ..... *Clause 24.2.*

(b) *For rewireable plugs and connectors* ..... *Clause 24.3.*

(c) *For non-rewireable plugs and connectors* ..... *Clauses 24.3 and 24.4.*

(d) *For glands of accessories with an IP classification*..... *Clause 24.5.*

Before starting the tests of Clause 24.2 or 24.3, accessories with enclosures of resilient or thermoplastic material are placed with their bases or flexible cables, in a refrigerator at a temperature of –15 ±2°C for at least 16 h. They are then removed from the refrigerator and immediately subjected to the tests of Clause 24.2 or 24.3, as appropriate.

24.2 Impact hammer test for socket-outlets and appliance inlets

Socket-outlets and appliance inlets shall be subjected to, and shall comply with, the mechanical strength tests of AS/NZS 60335.1.

In addition, protected accessories with an IP classification shall withstand the relevant treatment specified in Clause 18.

24.3 Tests for plugs and connectors

Rewireable accessories are fitted with the lightest type of flexible cable of the smallest cross-sectional area specified in Clause 23.4.

Non-rewireable accessories are tested as delivered.

The free end of the cable, which is about 2.25 m long, is fixed to a wall at a height of 750 mm above the floor, as shown in Figure 5.

The sample is held so that the cable is horizontal and then it is allowed to fall onto a concrete floor. This is done eight times, the cable being rotated through 45° at its fixing each time.

After the tests, the samples shall show no damage within the meaning of this Standard; in particular, no part shall have become detached or loosened.

In addition, protected accessories with an IP classification shall also withstand the relevant treatment specified in Clause 18.

NOTE: Chips and dents that adversely affect the protection against electric shock, moisture or corrosion constitute a failure.

COPYRIGHT

For rewireable accessories, the measurements are made on the sample fitted with conductors of the largest cross-sectional area specified in Clause 11.4, and also without conductors. For non-rewireable accessories, the measurements are made on the sample as delivered.

Socket-outlets and connectors are checked when in engagement with a plug and also without a plug.

NOTES:

1 The contribution to the creepage distance of any groove less than 1 mm wide is limited to its width.

2 Any air gap less than 1 mm wide is ignored when computing the total clearance.

3 The surface on which the base of a socket-outlet is mounted includes any surface with which the base is in contact when the socket-outlet is installed. If the base is provided with a metal plate at the back, this plate is not regarded as the mounting surface.

26.2 Sealing compound

Sealing compound shall not protrude above the edge of the cavity in which it is contained.

Compliance is checked by inspection.

27 RESISTANCE TO HEAT, FIRE AND TRACKING

27.1 Determination of ignitability and combustion propagation*

This test shall be carried out in accordance with the provisions for the determination of ignitability and combustion propagation of AS/NZS 3100. For socket-outlets and appliance inlets the (a) and (b) temperatures of the test shall be 750°C for 30 s and for plugs and connectors the (a) and (b) temperatures shall be 650°C for 30 s.

27.1 Resistance to fire test†

Accessories shall comply with the requirements for resistance to fire in accordance with AS/NZS 3100 Annex A as follows:

(a) The glow-wire test temperature 'T' shall be—

(i) 750°C for fixed socket-outlets and appliance inlets; and

(ii) 650°C for plugs and connectors.

(b) All other relevant parts of fixed socket-outlets and appliance inlets shall be subjected to the glow-wire test with a test temperature of 750°C.

27.2 Heat behaviour test

The accessory shall be subjected to the heat behaviour test as specified in AS/NZS 3100.

27.3 Resistance to tracking

Insulating parts supporting, or in contact with, live parts of accessories, shall be of material resistant to tracking, if they are exposed to excessive deposition of moisture or dirt in normal use, unless the creepage distances are at least equal to twice the values specified in Clause 26.

For material other than ceramic, compliance is checked by conducting the proof tracking test of AS/NZS 60112 and obtaining a proof tracking index of 250 using solution A.

Internal parts of connectors may, by design, provide a lower degree of severity, e.g. sealing. If this is the case, the proof tracking index test may be reduced to 175.

---

* This clause ceases to be part of the Standard on 9 July 2006.

† This clause forms part of the Standard on publication but shall be applied from 9 July 2006.

COPYRIGHT

NOTE: In case of doubt, the test is repeated, if necessary on a new set of samples.

28 RESISTANCE TO RUSTING

Ferrous parts, including enclosures, shall be adequately protected against rusting.

Compliance is checked by the following test:

(a) All grease is removed from the parts to be tested, by immersion in a suitable solvent for 10 min. The parts are then immersed for 10 min in a 10% solution of ammonium chloride in water at a temperature of 20 ±5°C.

(b) Without drying, but after shaking off any drops, the parts are placed for 10 min in a box containing air saturated with moisture at a temperature of 20 ±5°C.

(c) After the parts have been dried for 10 min in a heating cabinet at a temperature of 100 ±5°C, their surfaces shall show no signs of rust.

NOTES:

1 Traces of rust on sharp edges and any yellowish film removable by rubbing are ignored.

2 For small helical springs and the like, and for inaccessible parts exposed to abrasion, a layer of grease may provide sufficient protection against rusting. Such parts are subjected to the test only if there is doubt about the effectiveness of the grease film, and the test is then made without previous removal of the grease.

COPYRIGHT

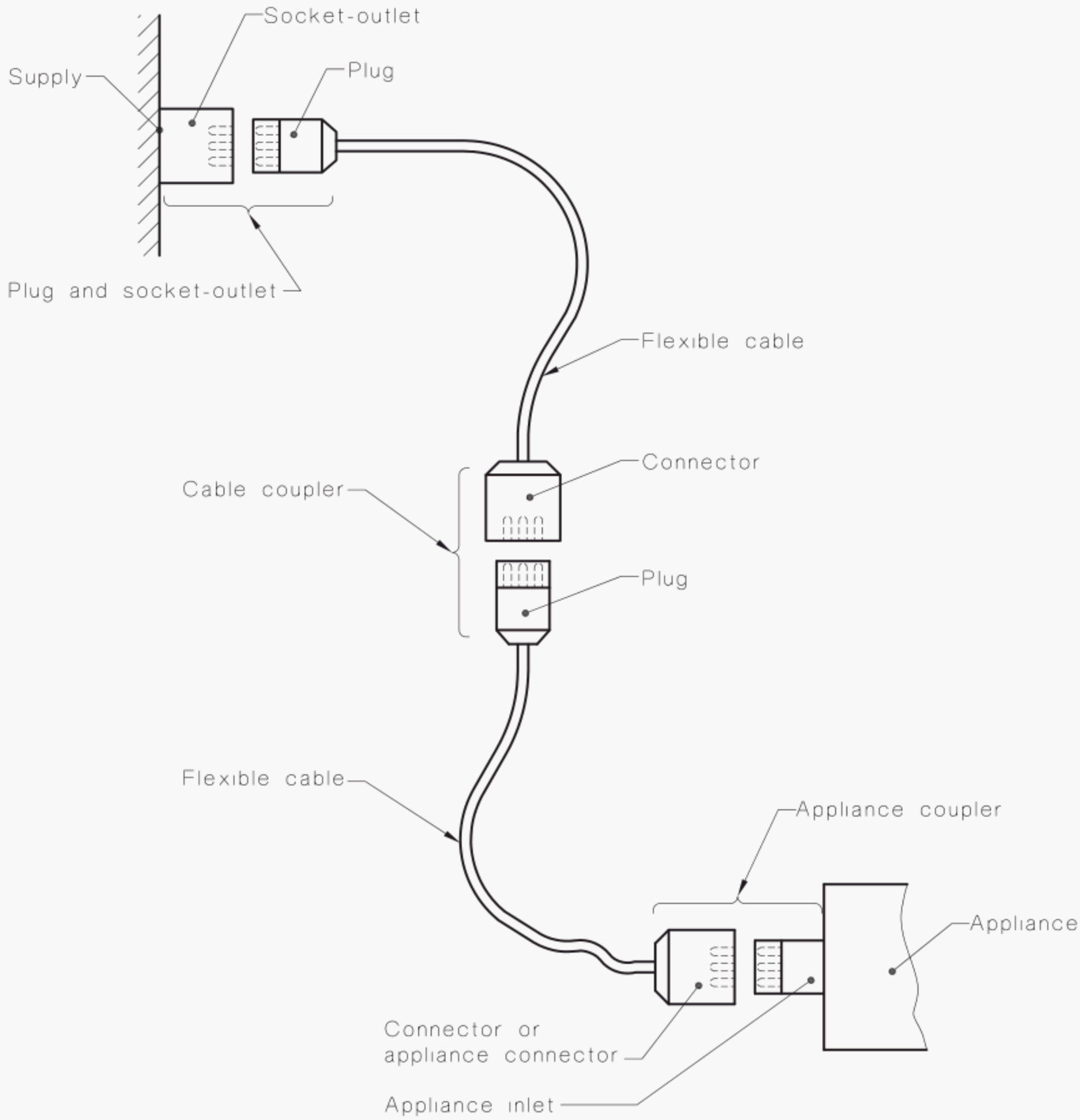

FIGURE 1 DIAGRAM SHOWING THE USE OF THE ACCESSORIES (see Clause 2.2)

COPYRIGHT

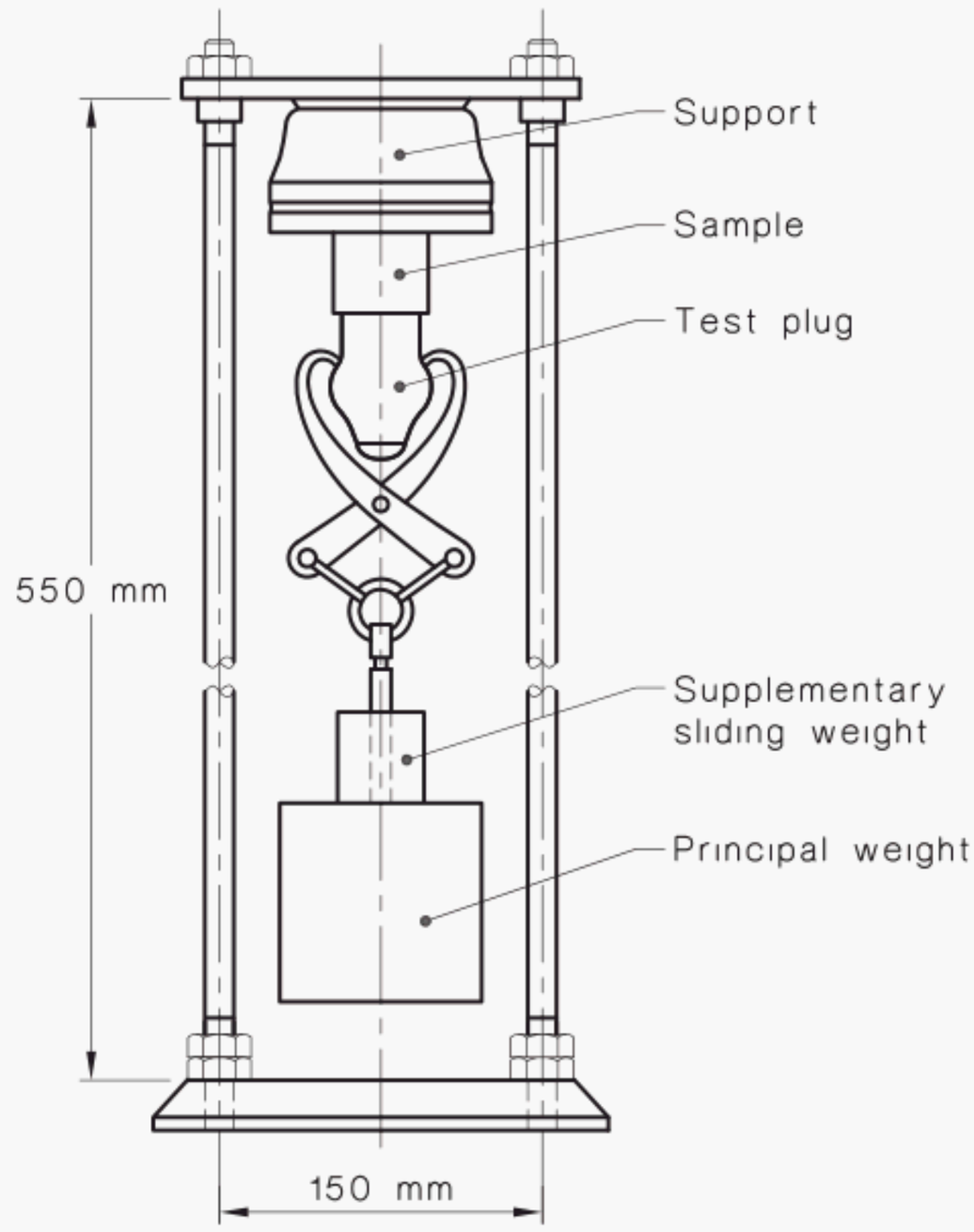

DIMENSIONS IN MILLIMETRES

FIGURE 2 TYPICAL TEST APPARATUS FOR CHECKING THE WITHDRAWAL FORCE (see Clause 15.1)

COPYRIGHT

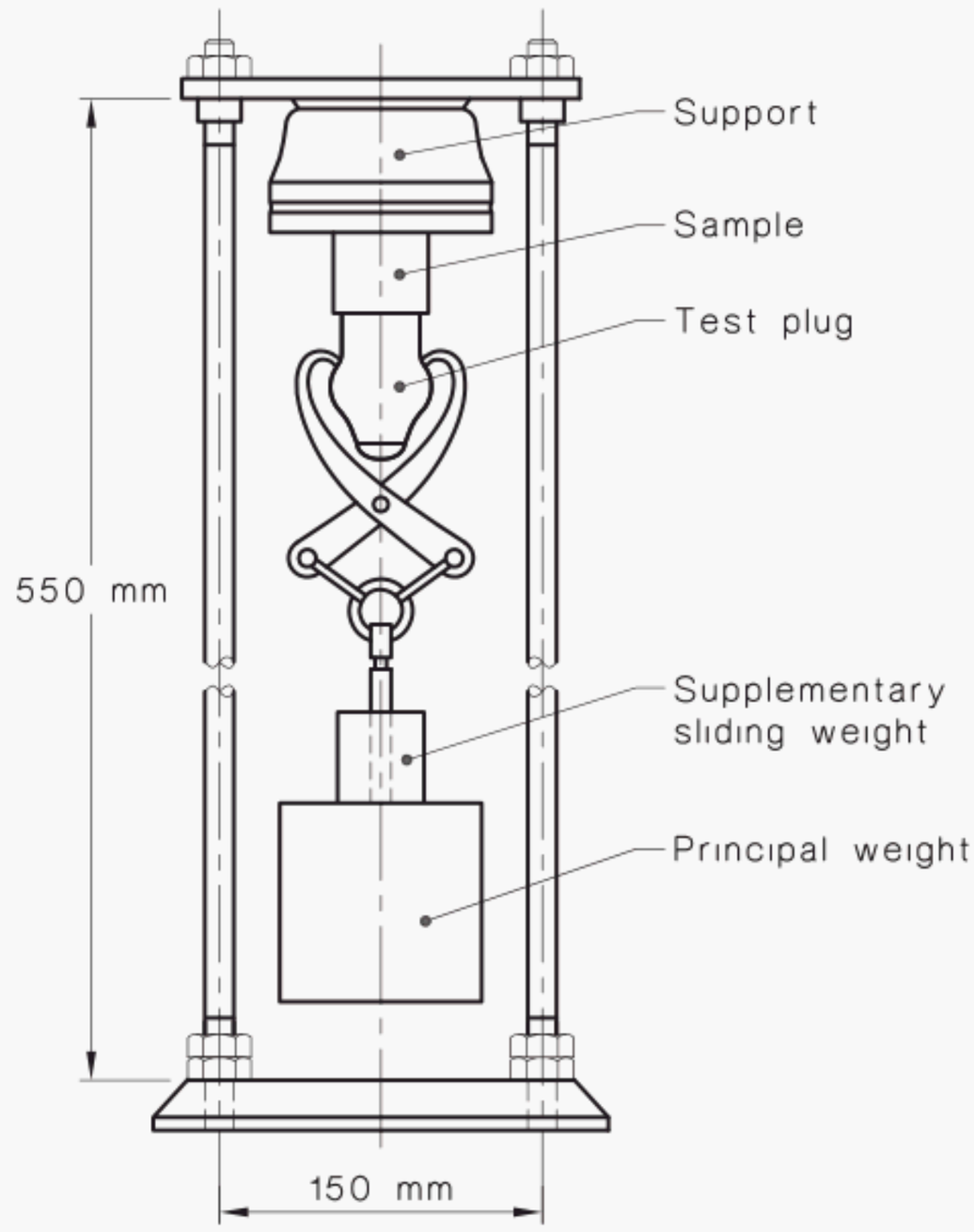

DIMENSIONS IN MILLIMETRES

FIGURE 2 TYPICAL TEST APPARATUS FOR CHECKING THE WITHDRAWAL FORCE (see Clause 15.1)

COPYRIGHT

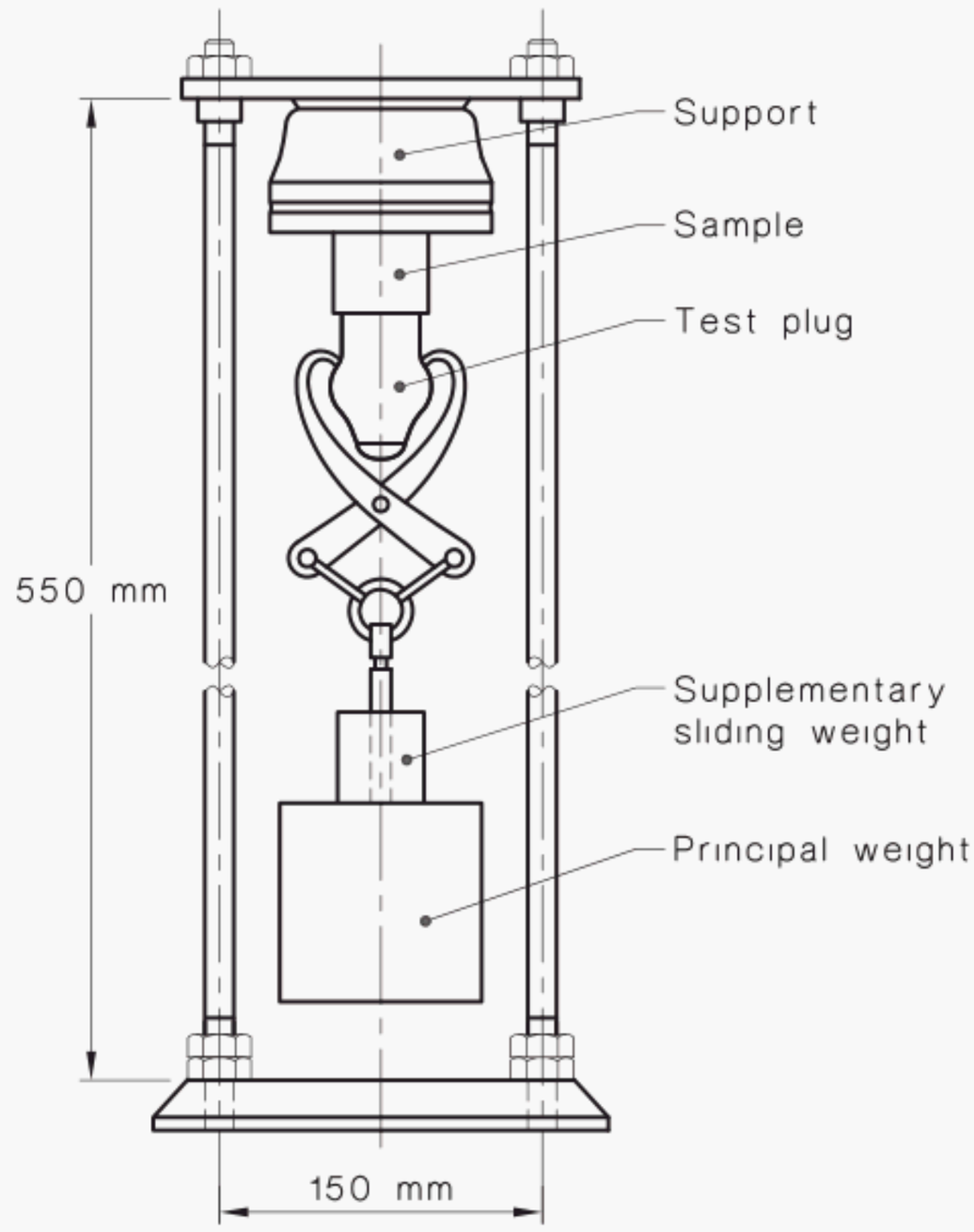

DIMENSIONS IN MILLIMETRES

FIGURE 2 TYPICAL TEST APPARATUS FOR CHECKING THE WITHDRAWAL FORCE (see Clause 15.1)

COPYRIGHT

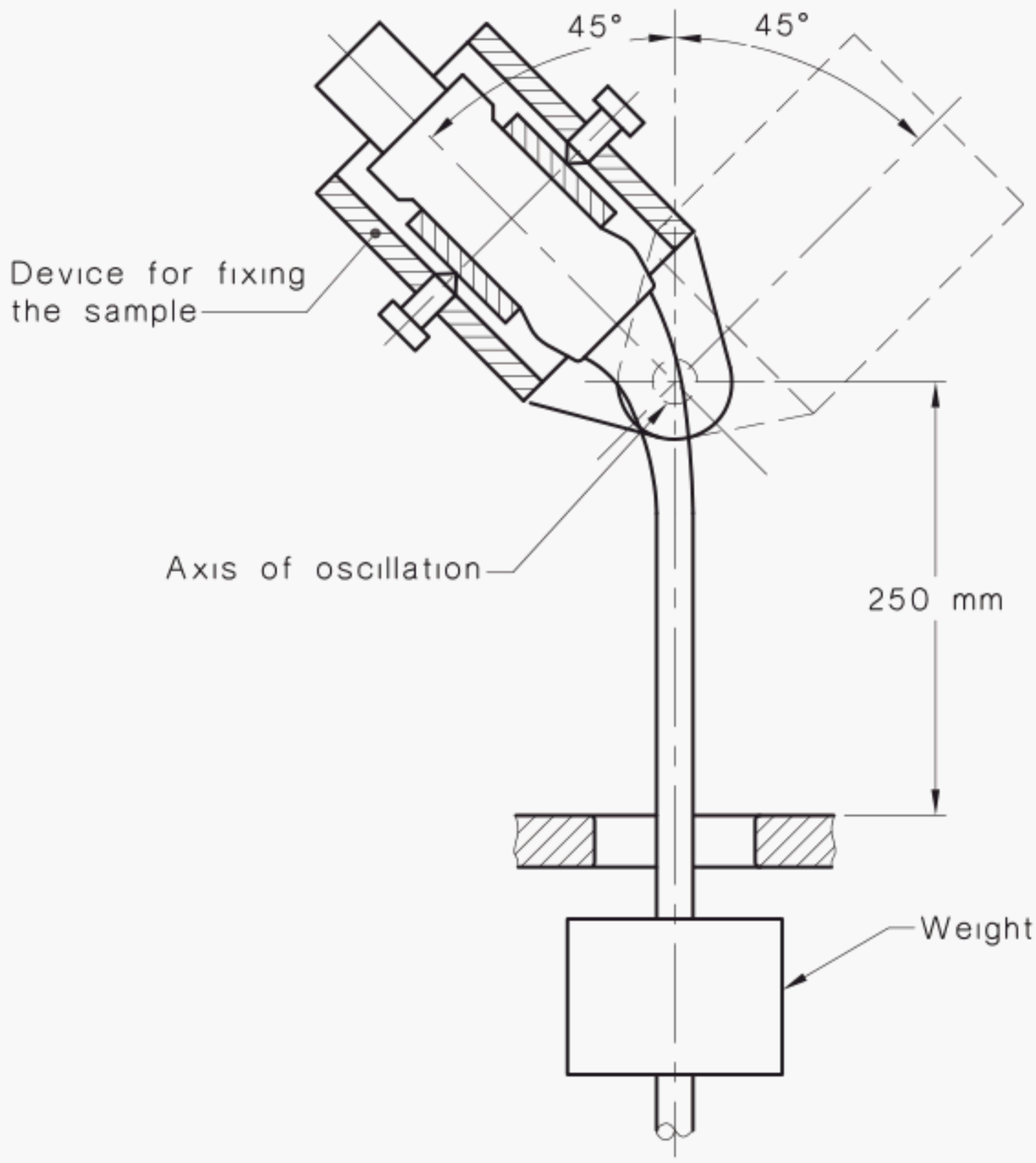

DIMENSIONS IN MILLIMETRES

FIGURE 6 TYPICAL APPARATUS FOR FLEXING TEST (see Clause 24.4)

COPYRIGHT

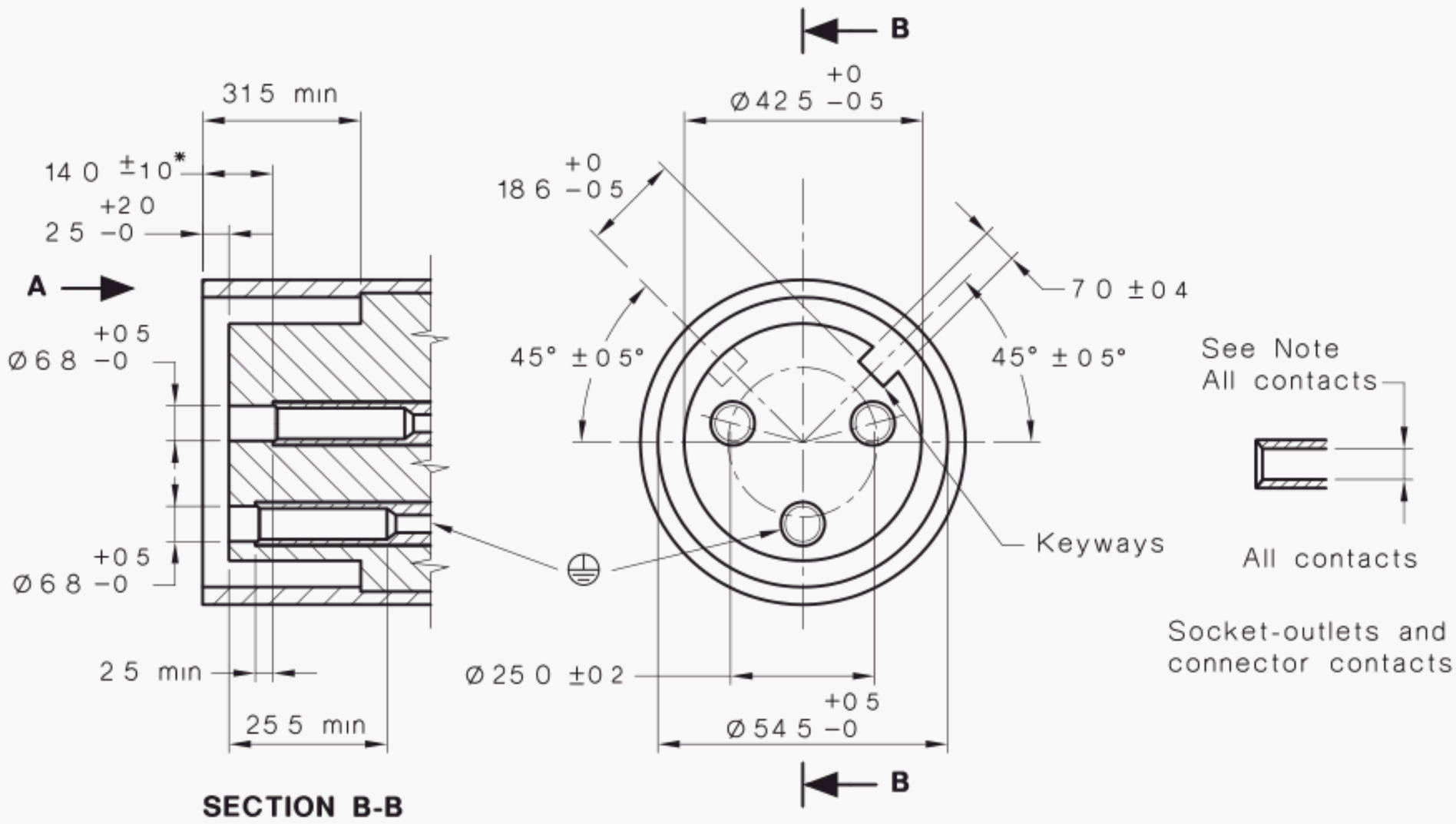

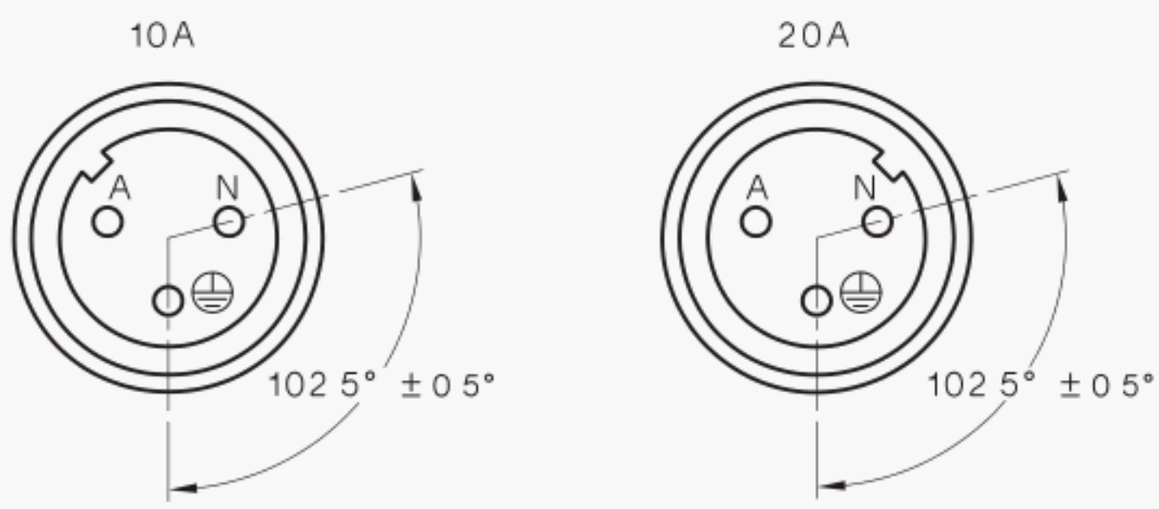

VIEWED FROM DIRECTION A

* 14.0 ±1.0 is to the top of the contact.

NOTE: Internal diameter of socket-outlet and connector contacts to be of a size that meets the requirements of Clauses 15.1 and 15.2.

1ST ANGLE PROJECTION

DIMENSIONS IN MILLIMETRES

STANDARD SHEET 1
10 A AND 20 A, 250 V, 50 Hz SOCKET-OUTLETS AND CONNECTORS

COPYRIGHT

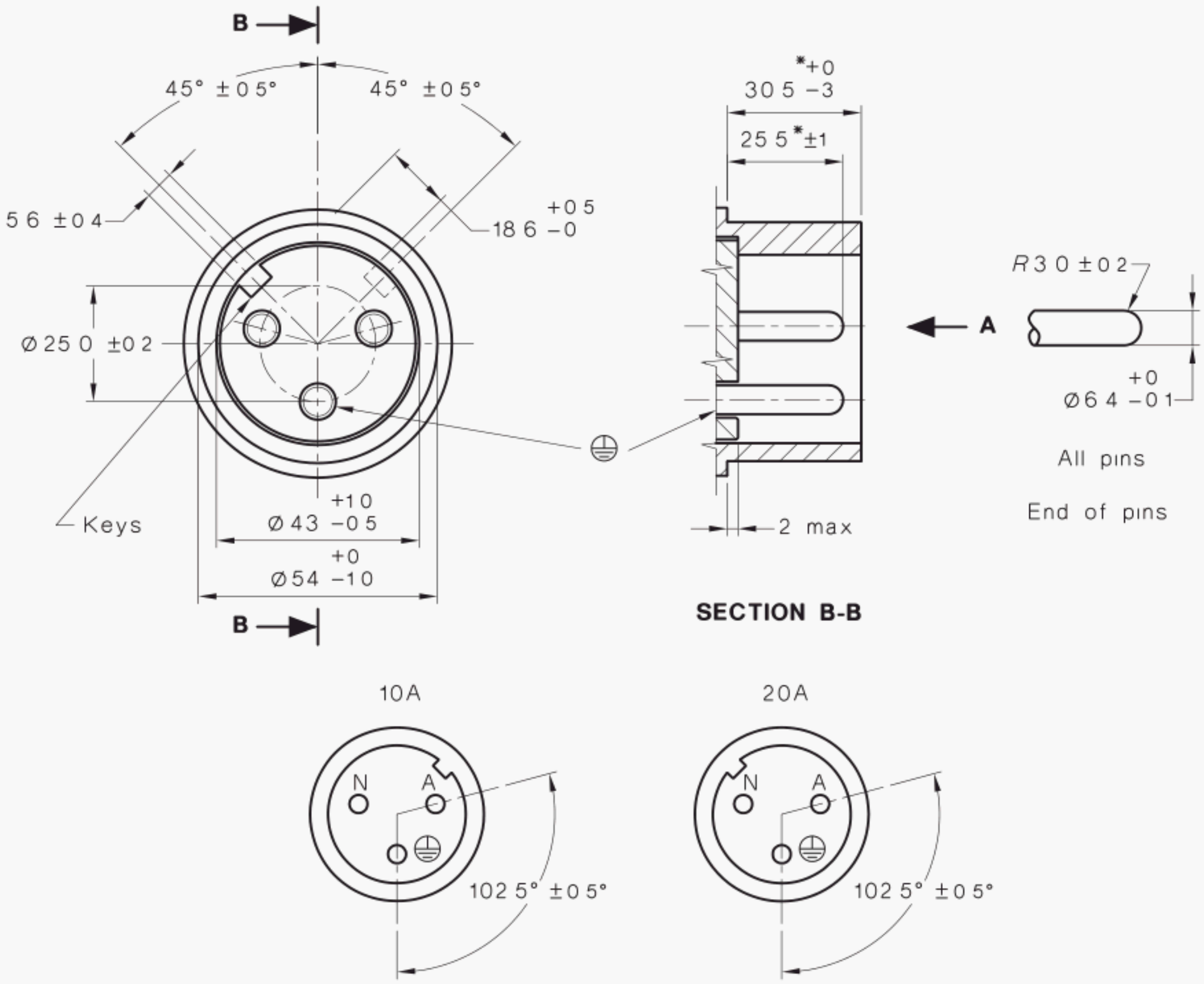

VIEWED FROM DIRECTION A

* The dimensions of the pin and skirt lengths are to the moulding face and will be reduced by the inclusion of a gasket. The gasket is nominally 1.5 thick.

1ST ANGLE PROJECTION

DIMENSIONS IN MILLIMETRES

STANDARD SHEET 2
10 A AND 20 A, 250 V, 50 Hz PLUGS AND APPLIANCE INLETS

COPYRIGHT

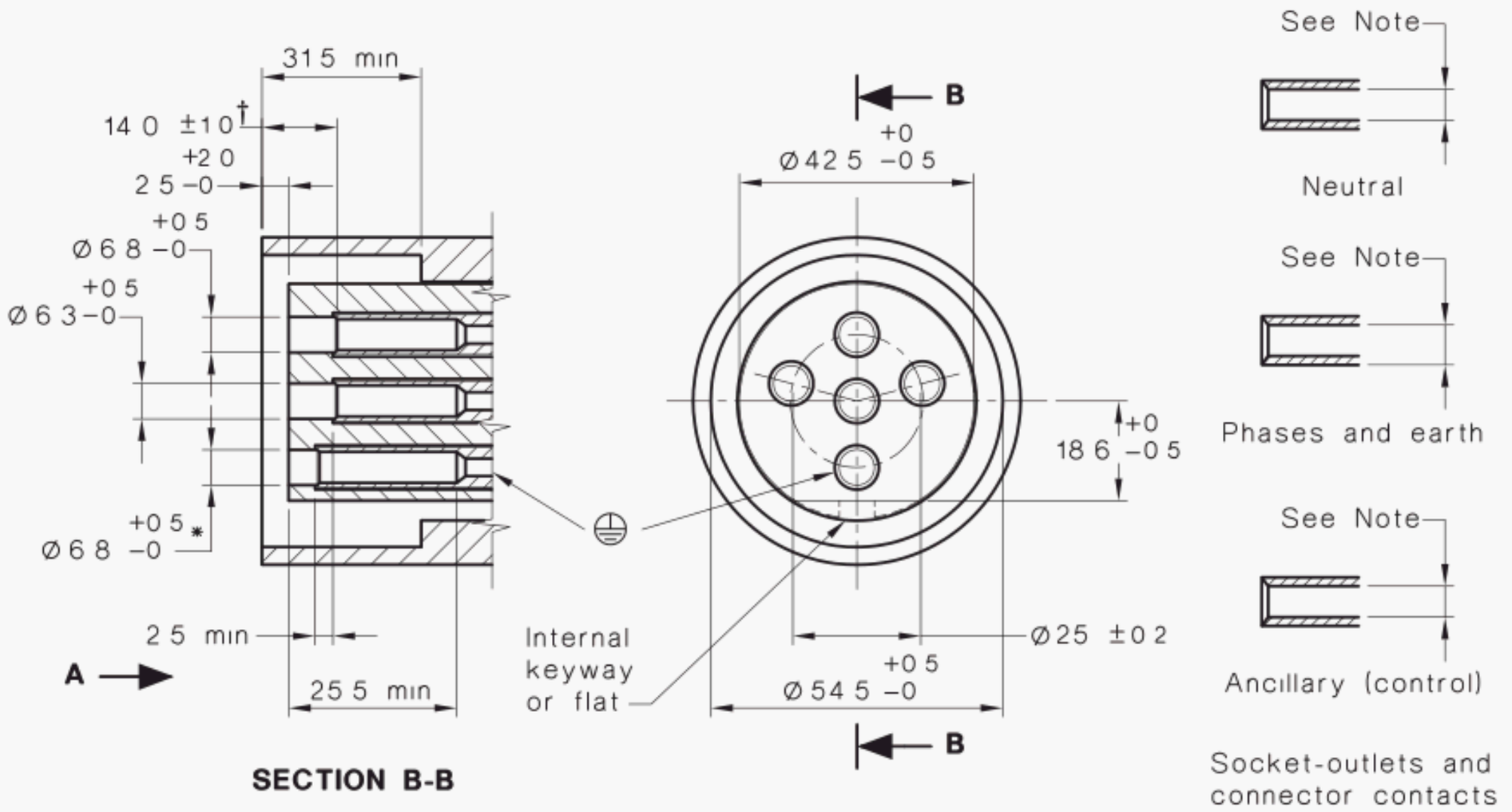

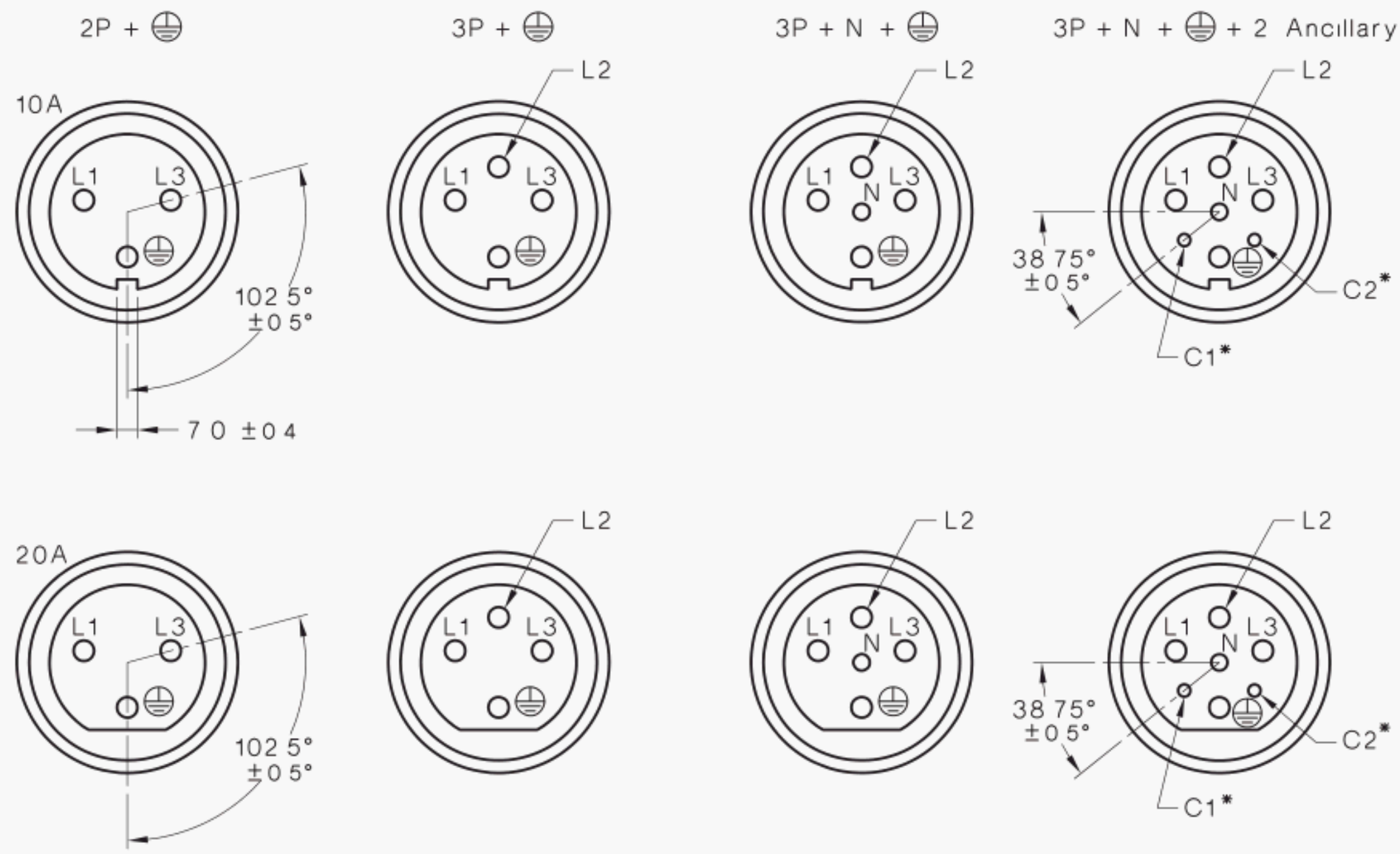

VIEWED FROM DIRECTION A

* $\varnothing\ 4.6^{+0.5}_{-0}$ mm for control pins

† 14.0 ±1.0 is to the top of the contact

NOTE: Internal diameter of socket-outlet and connector contacts to be of a size that meets the requirements of Clauses 15.1 and 15.2.

1ST ANGLE PROJECTION

DIMENSIONS IN MILLIMETRES

STANDARD SHEET 3
10 A AND 20 A, 415-500 V, 50 Hz SOCKET-OUTLETS AND CONNECTORS

COPYRIGHT

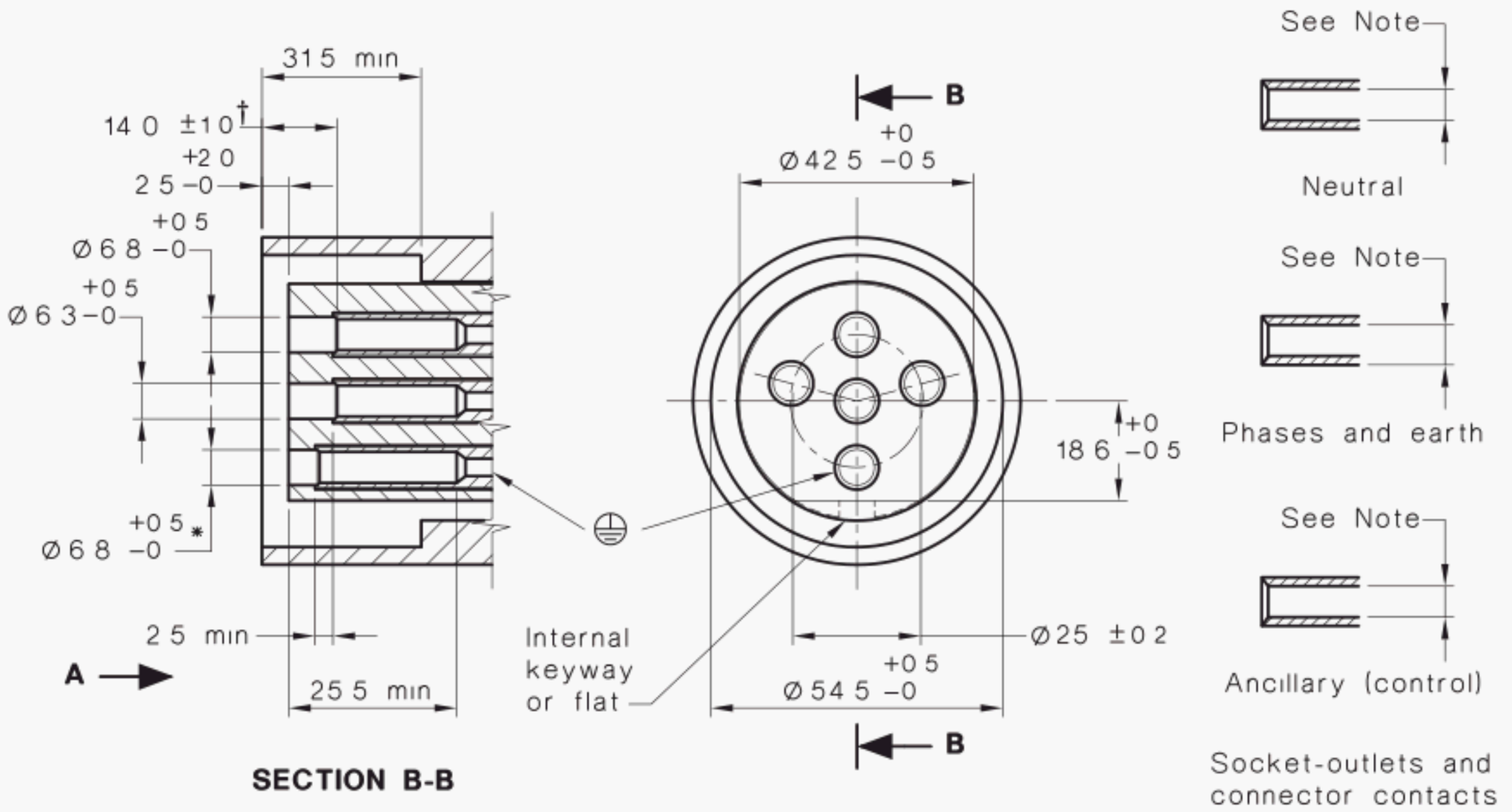

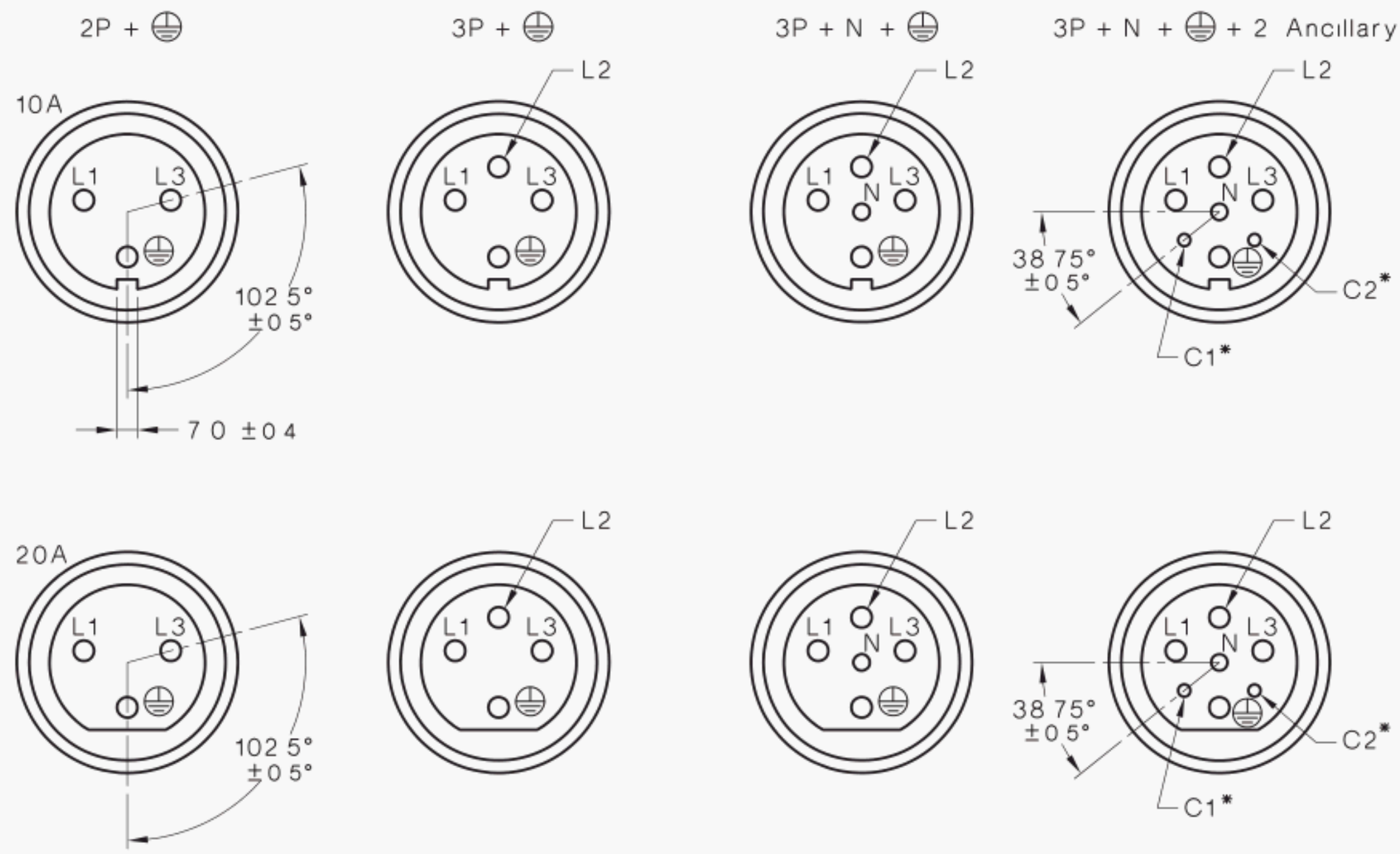

VIEWED FROM DIRECTION A

* $\varnothing\ 4.6^{+0.5}_{-0}$ mm for control pins

† 14.0 ±1.0 is to the top of the contact

NOTE: Internal diameter of socket-outlet and connector contacts to be of a size that meets the requirements of Clauses 15.1 and 15.2.

1ST ANGLE PROJECTION

DIMENSIONS IN MILLIMETRES

STANDARD SHEET 3
10 A AND 20 A, 415-500 V, 50 Hz SOCKET-OUTLETS AND CONNECTORS

COPYRIGHT

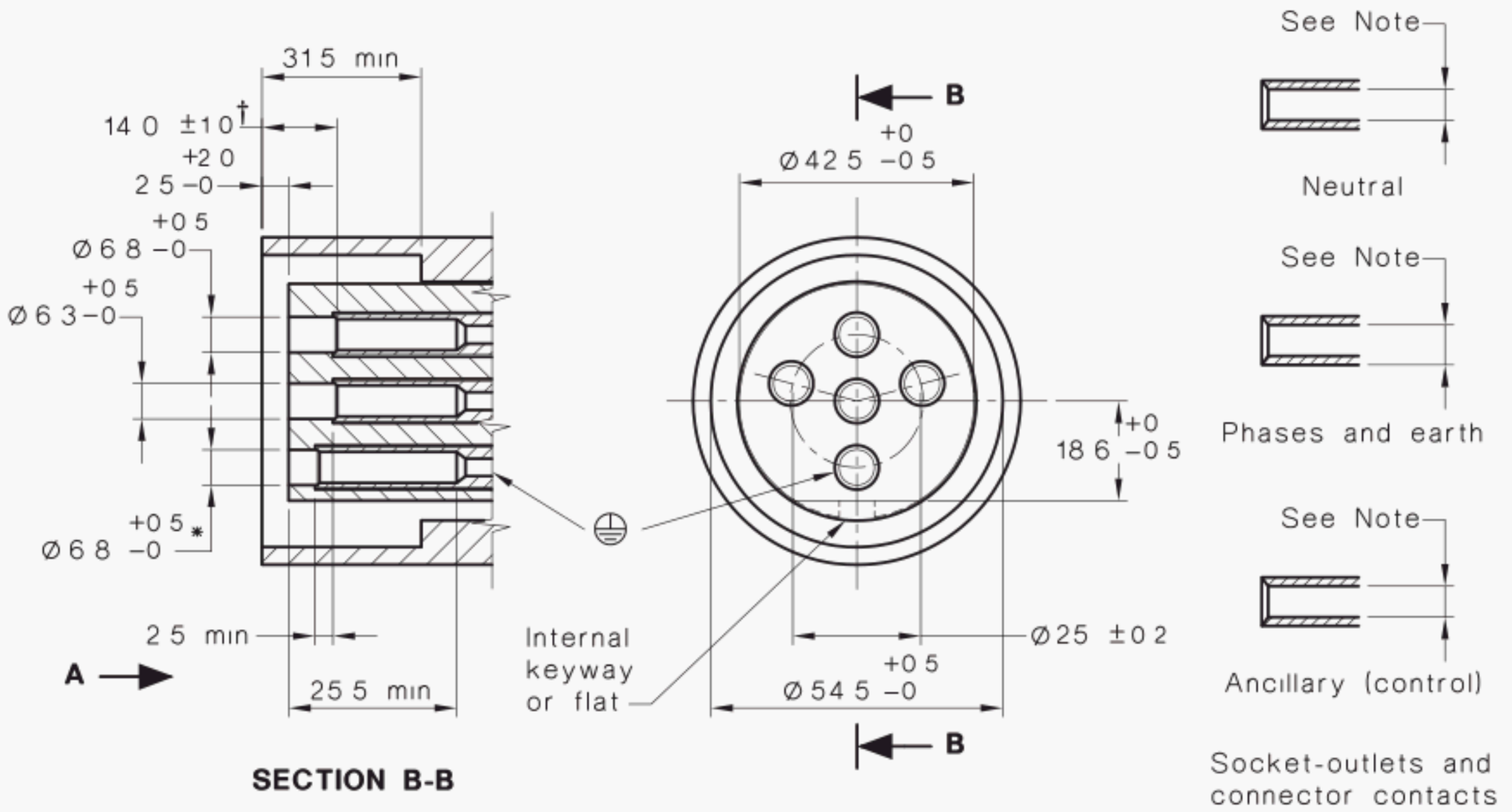

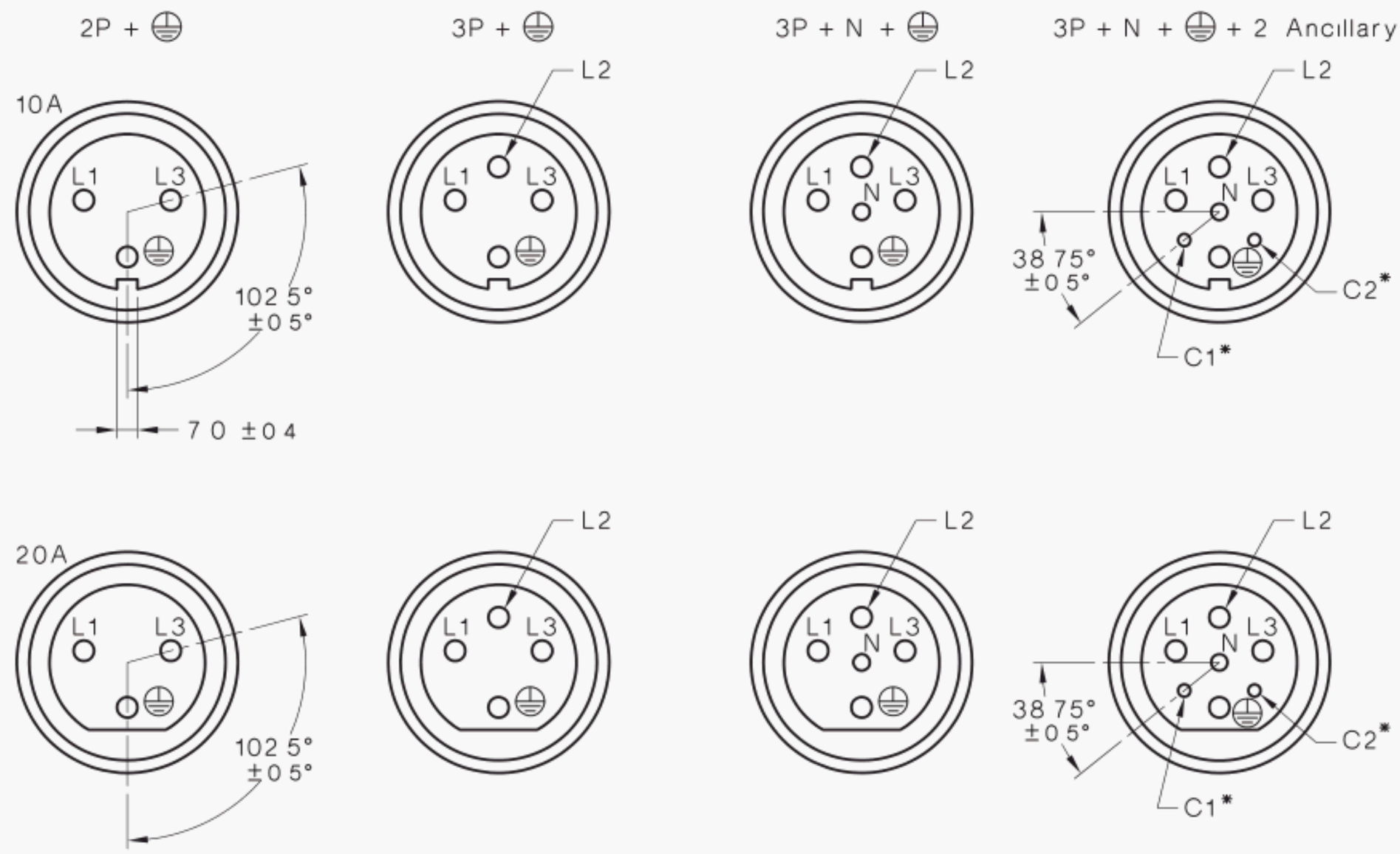

VIEWED FROM DIRECTION A

* $\varnothing\ 4.6^{+0.5}_{-0}$ mm for control pins

† 14.0 ±1.0 is to the top of the contact

NOTE: Internal diameter of socket-outlet and connector contacts to be of a size that meets the requirements of Clauses 15.1 and 15.2.

1ST ANGLE PROJECTION

DIMENSIONS IN MILLIMETRES

STANDARD SHEET 3
10 A AND 20 A, 415-500 V, 50 Hz SOCKET-OUTLETS AND CONNECTORS

COPYRIGHT

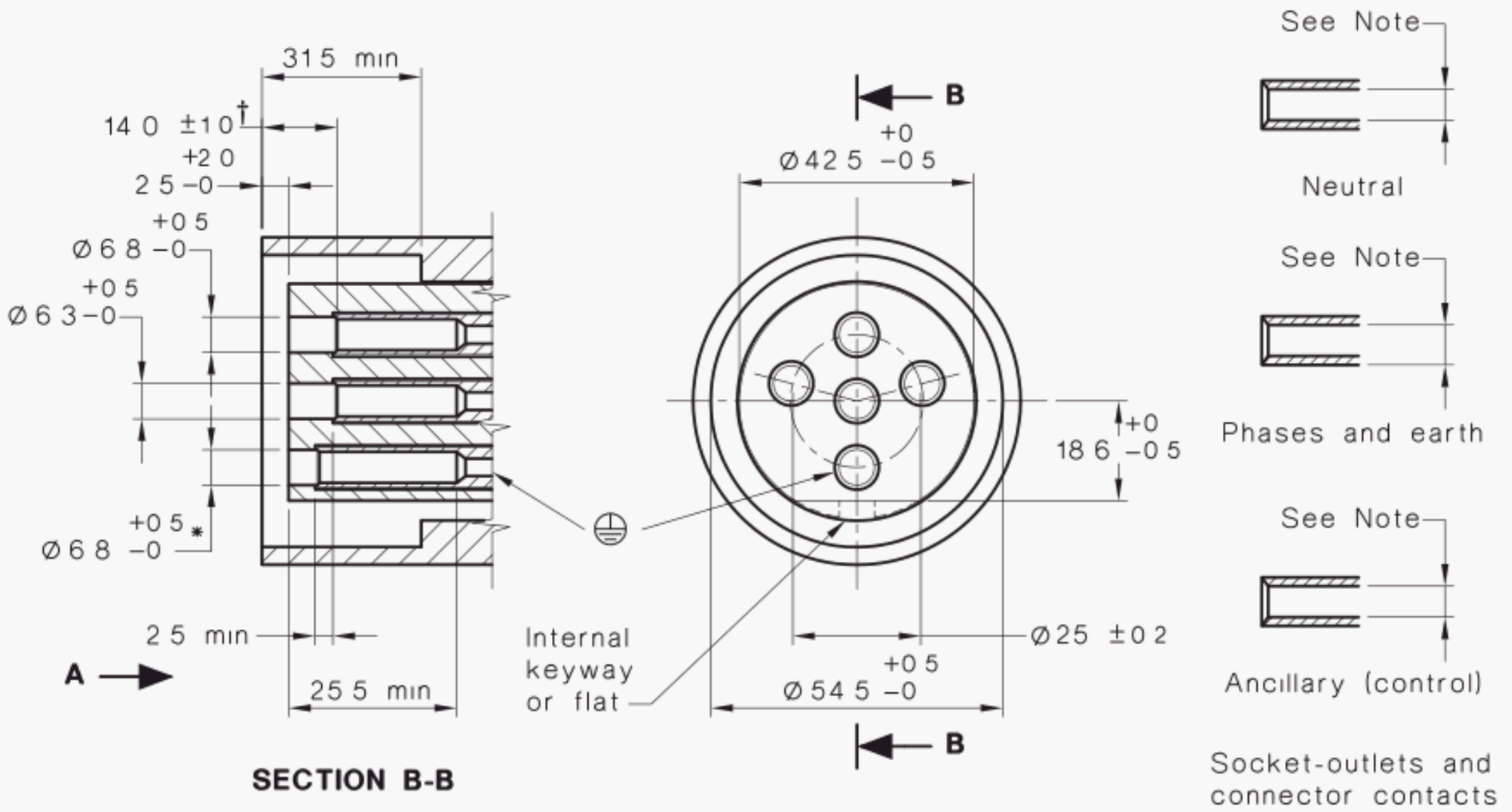

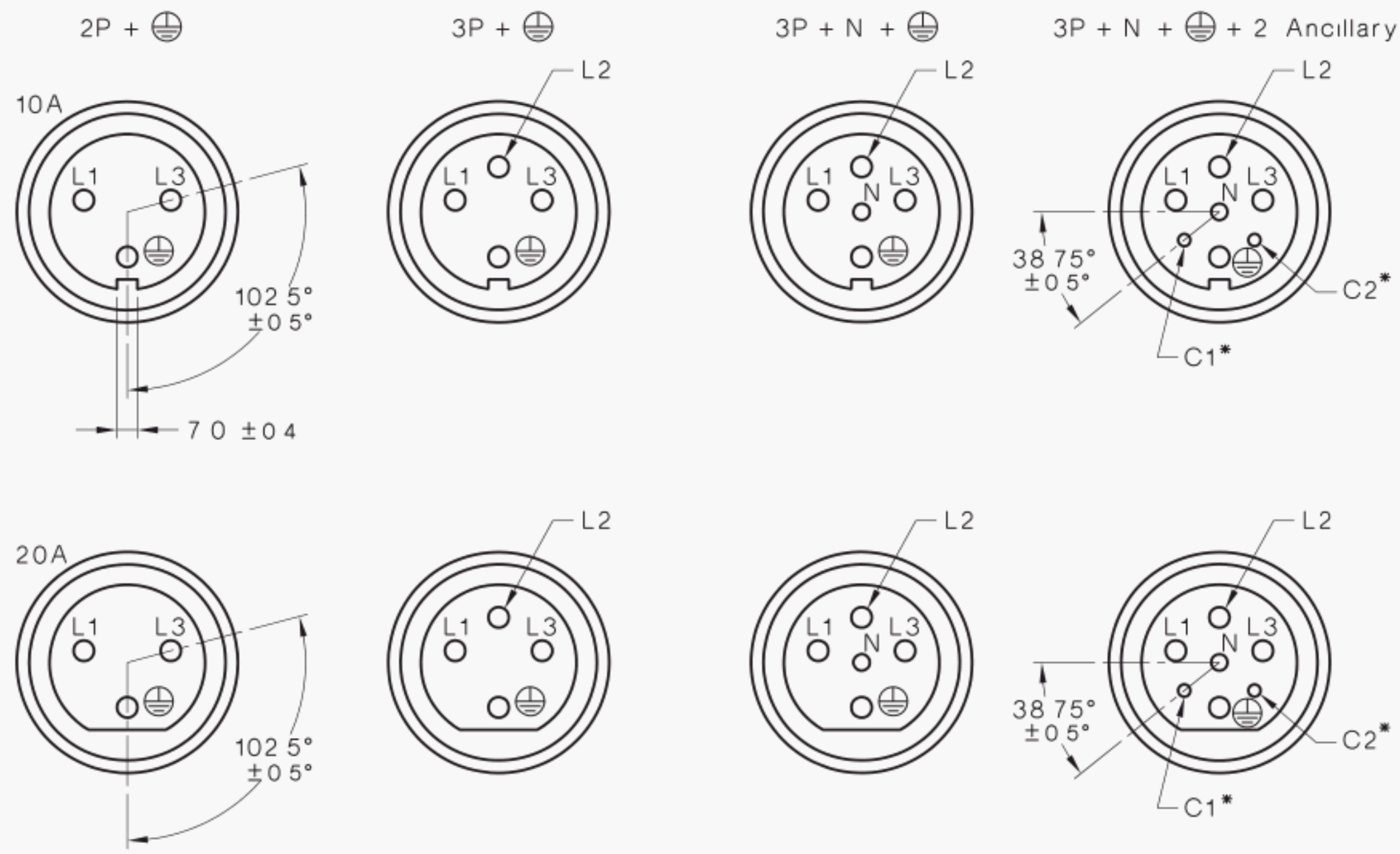

VIEWED FROM DIRECTION A

* $\varnothing\ 4.6^{+0.5}_{-0}$ mm for control pins

† 14.0 ±1.0 is to the top of the contact

NOTE: Internal diameter of socket-outlet and connector contacts to be of a size that meets the requirements of Clauses 15.1 and 15.2.

1ST ANGLE PROJECTION

DIMENSIONS IN MILLIMETRES

STANDARD SHEET 3
10 A AND 20 A, 415-500 V, 50 Hz SOCKET-OUTLETS AND CONNECTORS

COPYRIGHT

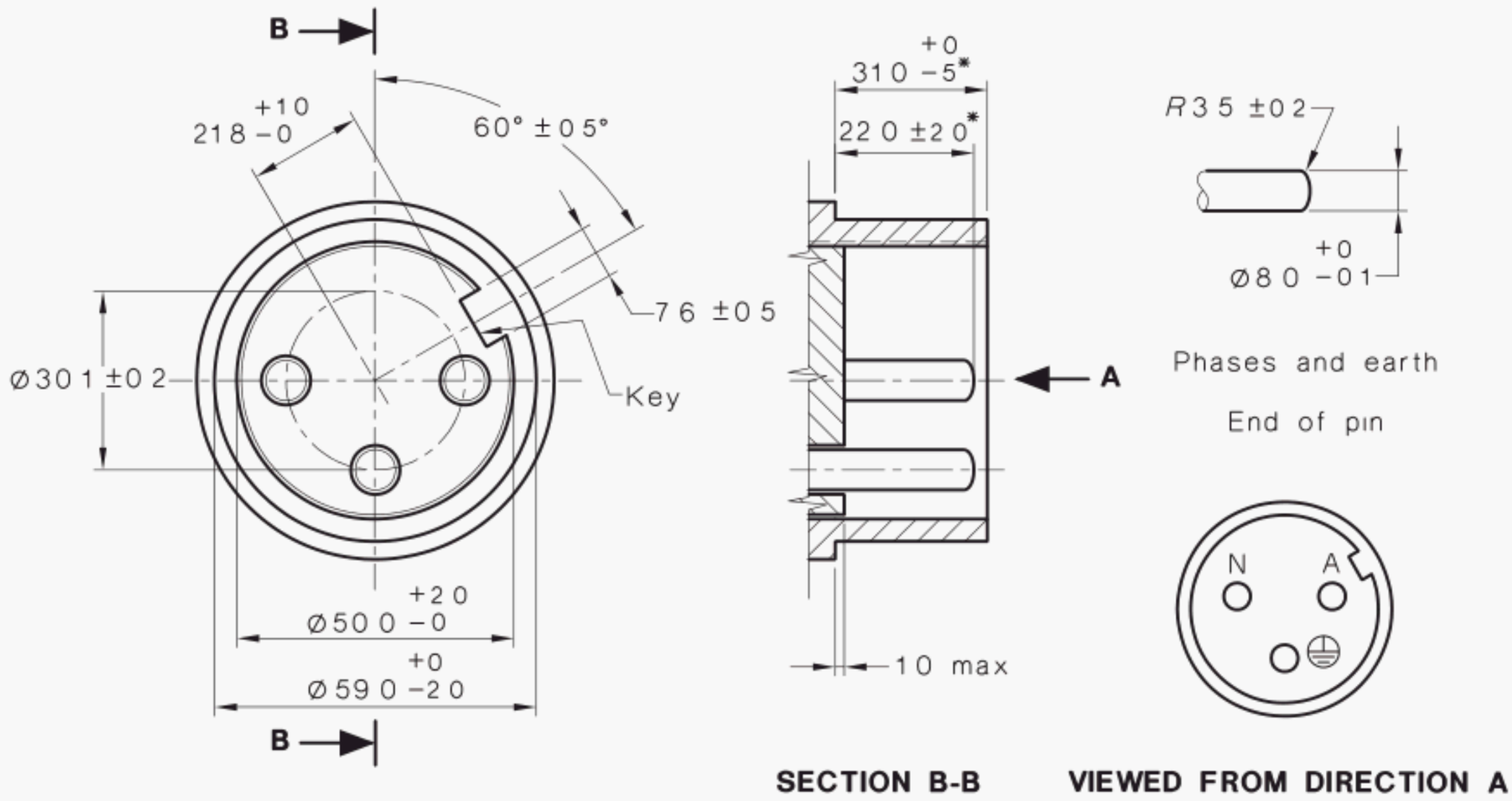

* The dimensions of the pin and skirt lengths are to the moulding face and will be reduced by the inclusion of a gasket. The gasket is nominally 1.5 thick.

1ST ANGLE PROJECTION

DIMENSIONS IN MILLIMETRES

STANDARD SHEET 6
32 A, 110 V, 50 Hz PLUGS AND APPLIANCE INLETS

COPYRIGHT

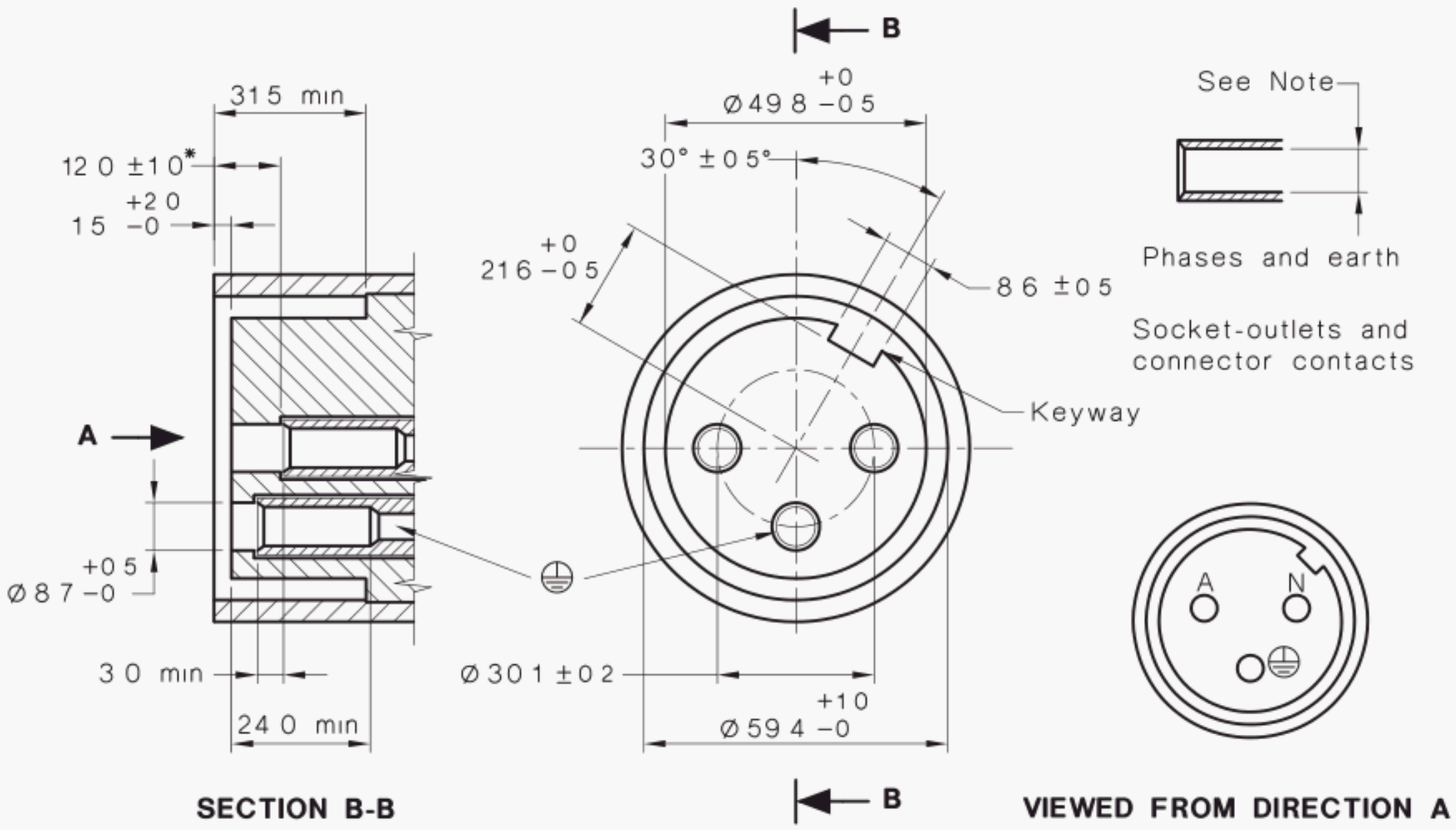

* 12.0 ±1.0 is to the top of the contact.

NOTE: Internal diameter of socket-outlet and connector contacts to be of a size that meets the requirements of Clauses 15.1 and 15.2.

1ST ANGLE PROJECTION

DIMENSIONS IN MILLIMETRES

STANDARD SHEET 7
32 A, 250 V, 50 Hz SOCKET-OUTLETS AND CONNECTORS

COPYRIGHT

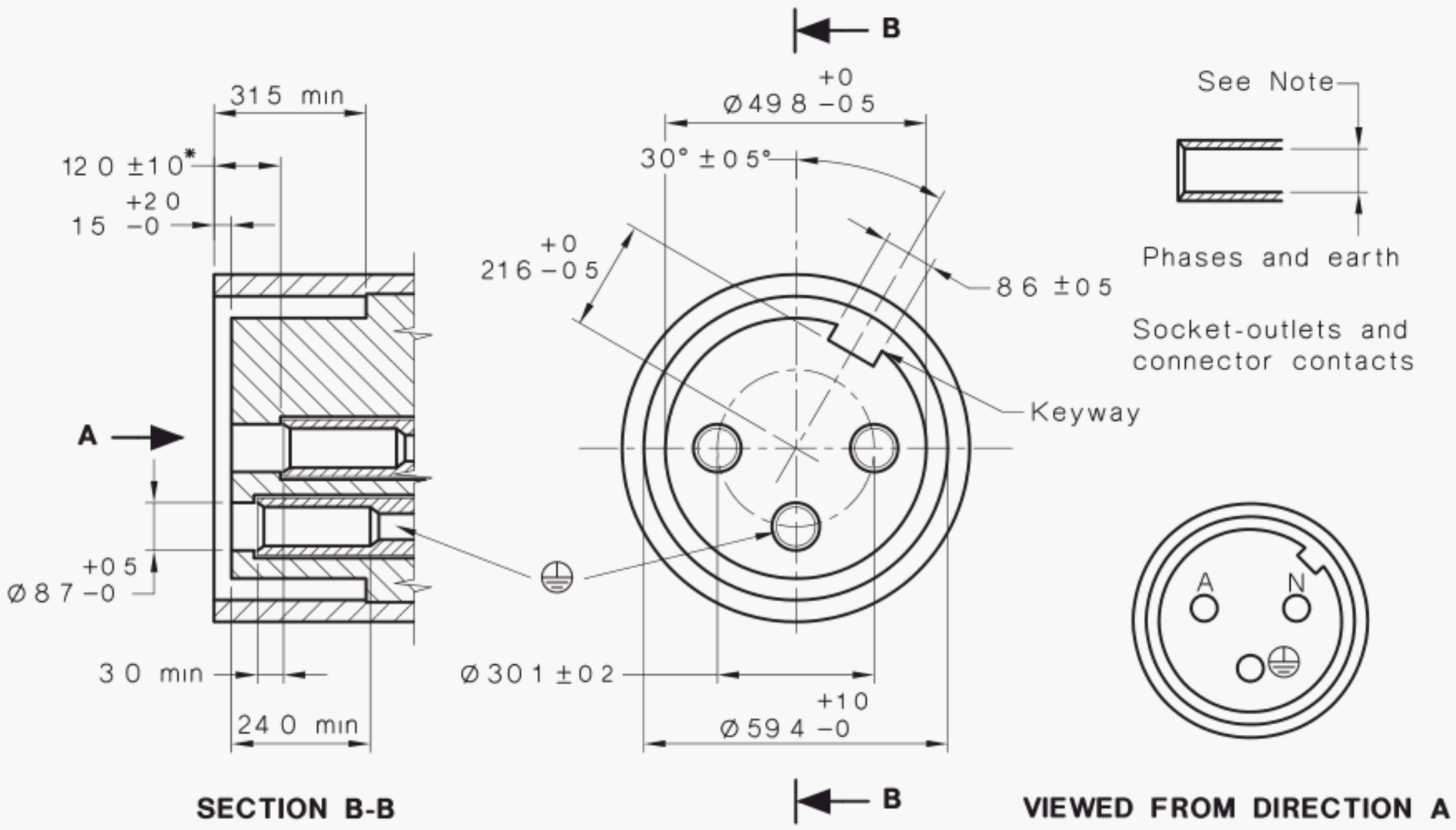

* 12.0 ±1.0 is to the top of the contact.

NOTE: Internal diameter of socket-outlet and connector contacts to be of a size that meets the requirements of Clauses 15.1 and 15.2.

1ST ANGLE PROJECTION

DIMENSIONS IN MILLIMETRES

STANDARD SHEET 7
32 A, 250 V, 50 Hz SOCKET-OUTLETS AND CONNECTORS

COPYRIGHT

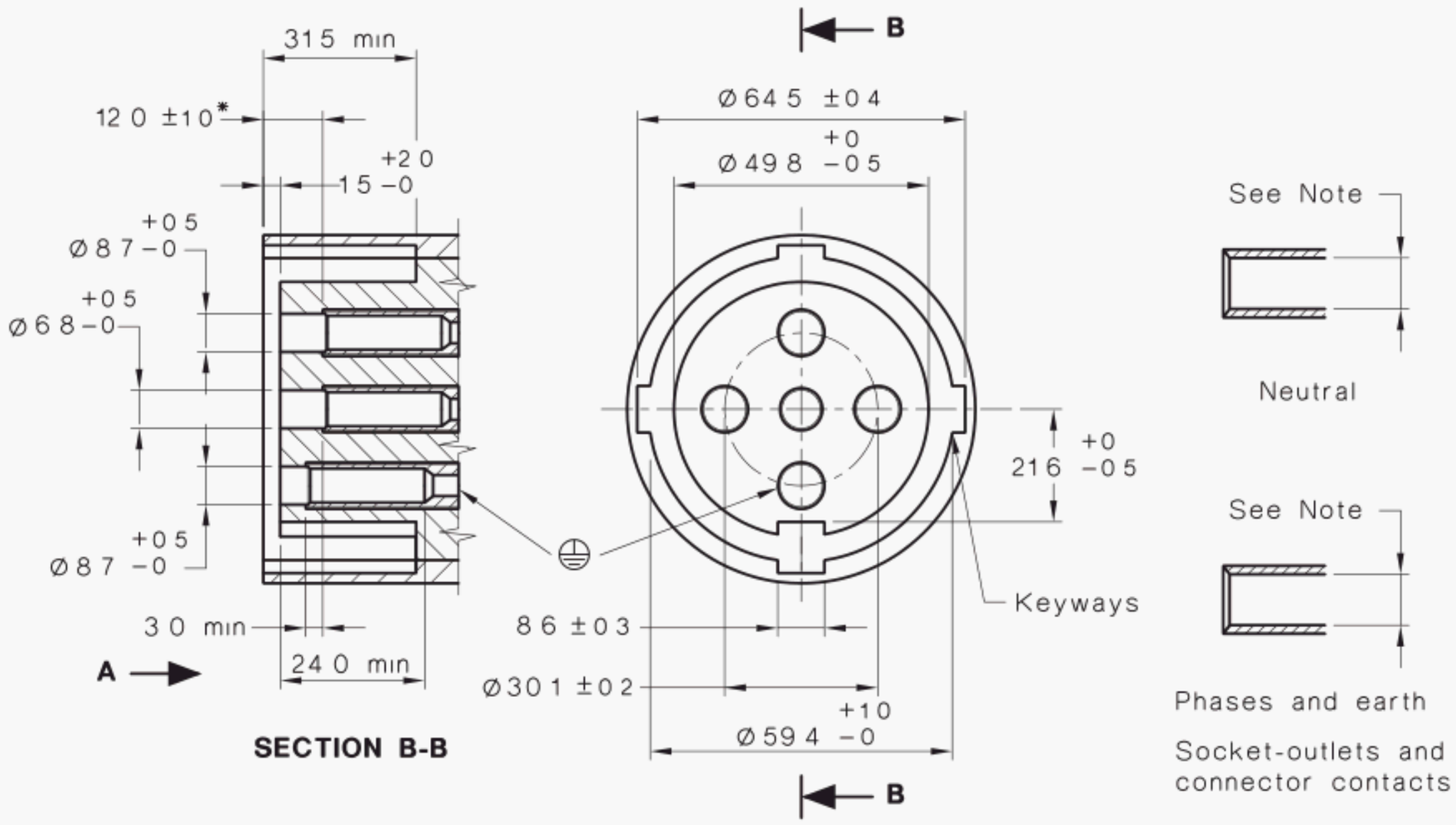

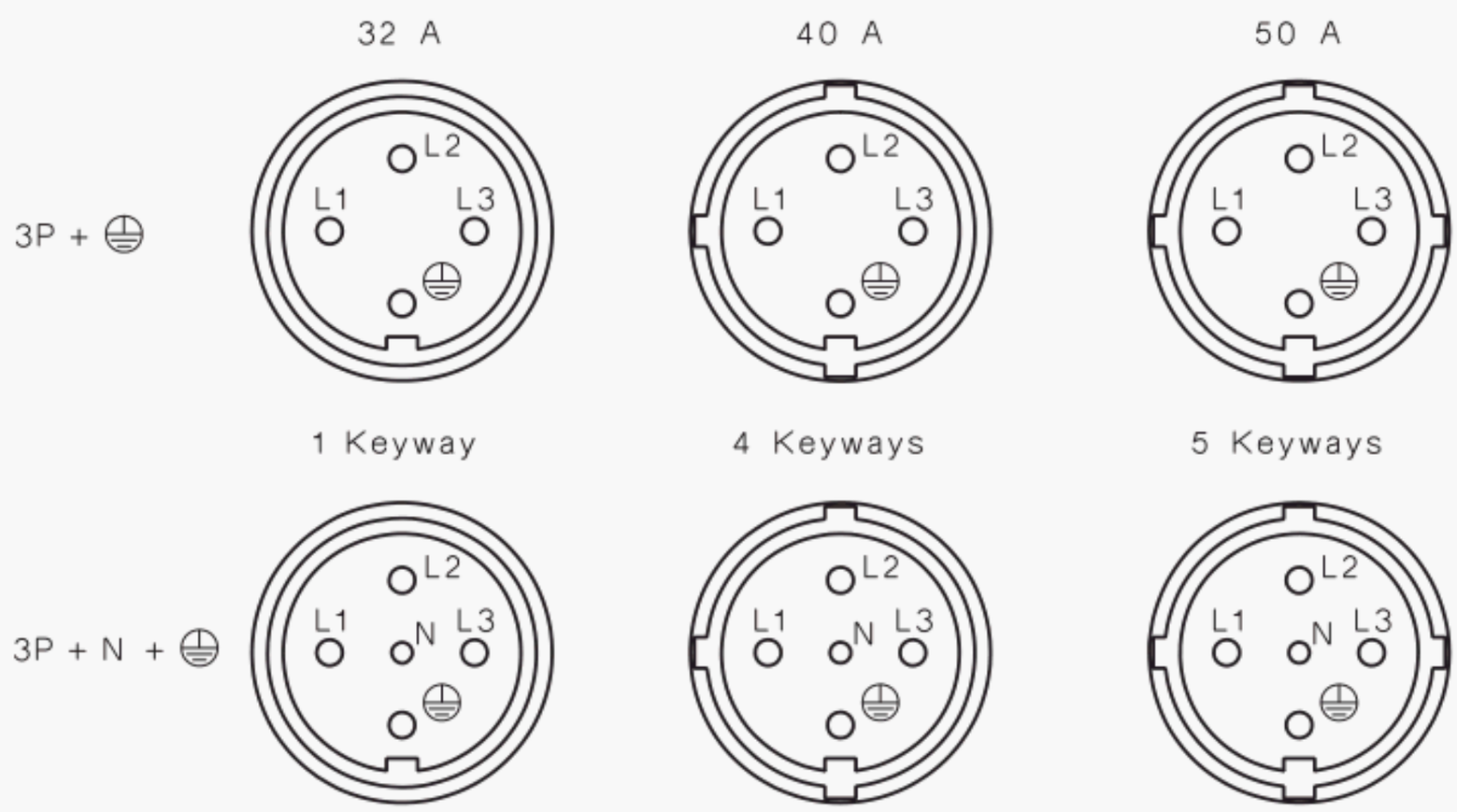

VIEWED FROM DIRECTION A

* 12.0 ±1.0 is to the top of the contact.

NOTE: Internal diameter of socket-outlet and connector contacts to be of a size that meets the requirements of Clauses 15.1 and 15.2.

1ST ANGLE PROJECTION

DIMENSIONS IN MILLIMETRES

STANDARD SHEET 9
32 A, 40 A AND 50 A, 415-500 V, 50 Hz SOCKET-OUTLETS AND CONNECTORS

COPYRIGHT

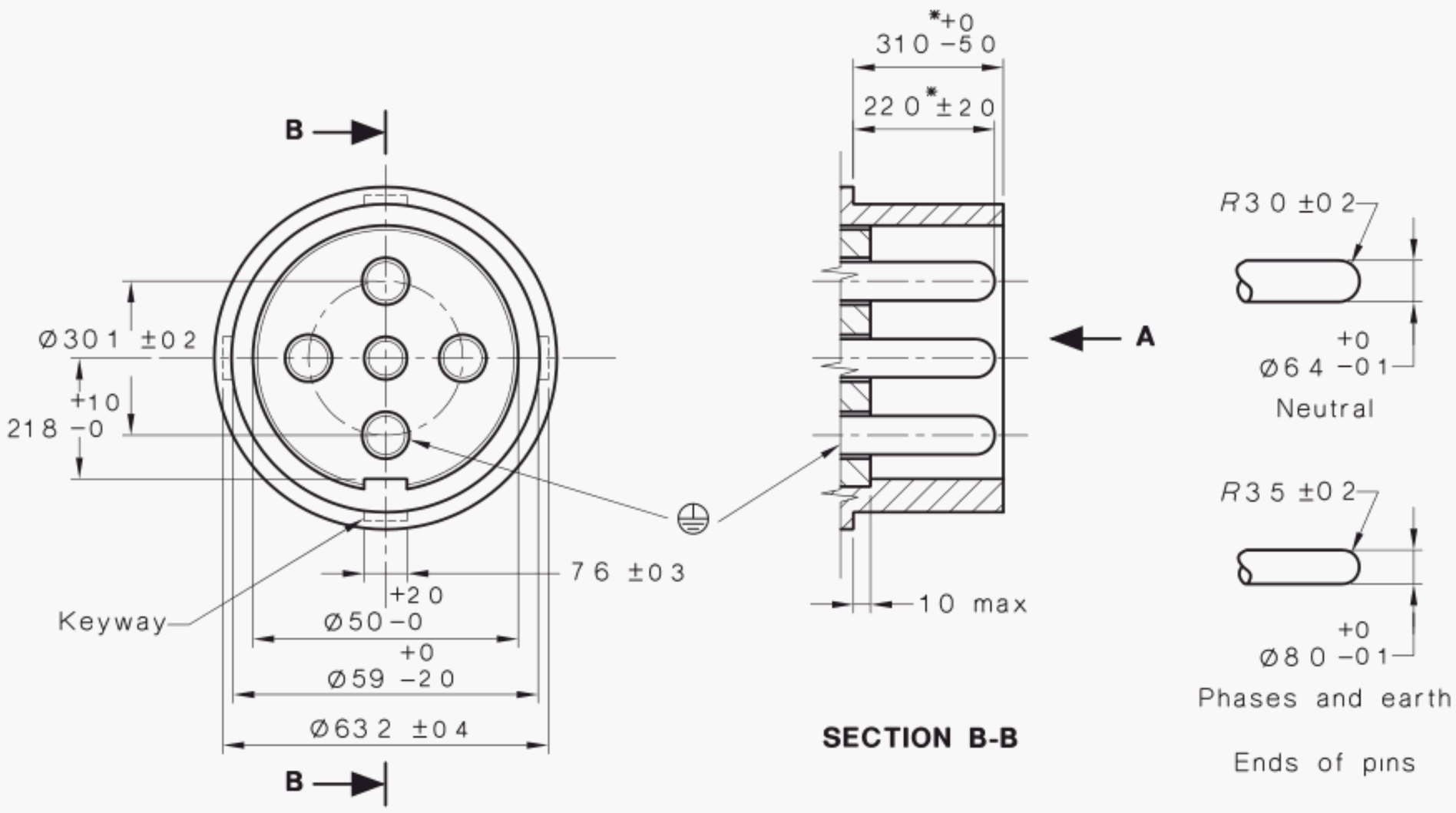

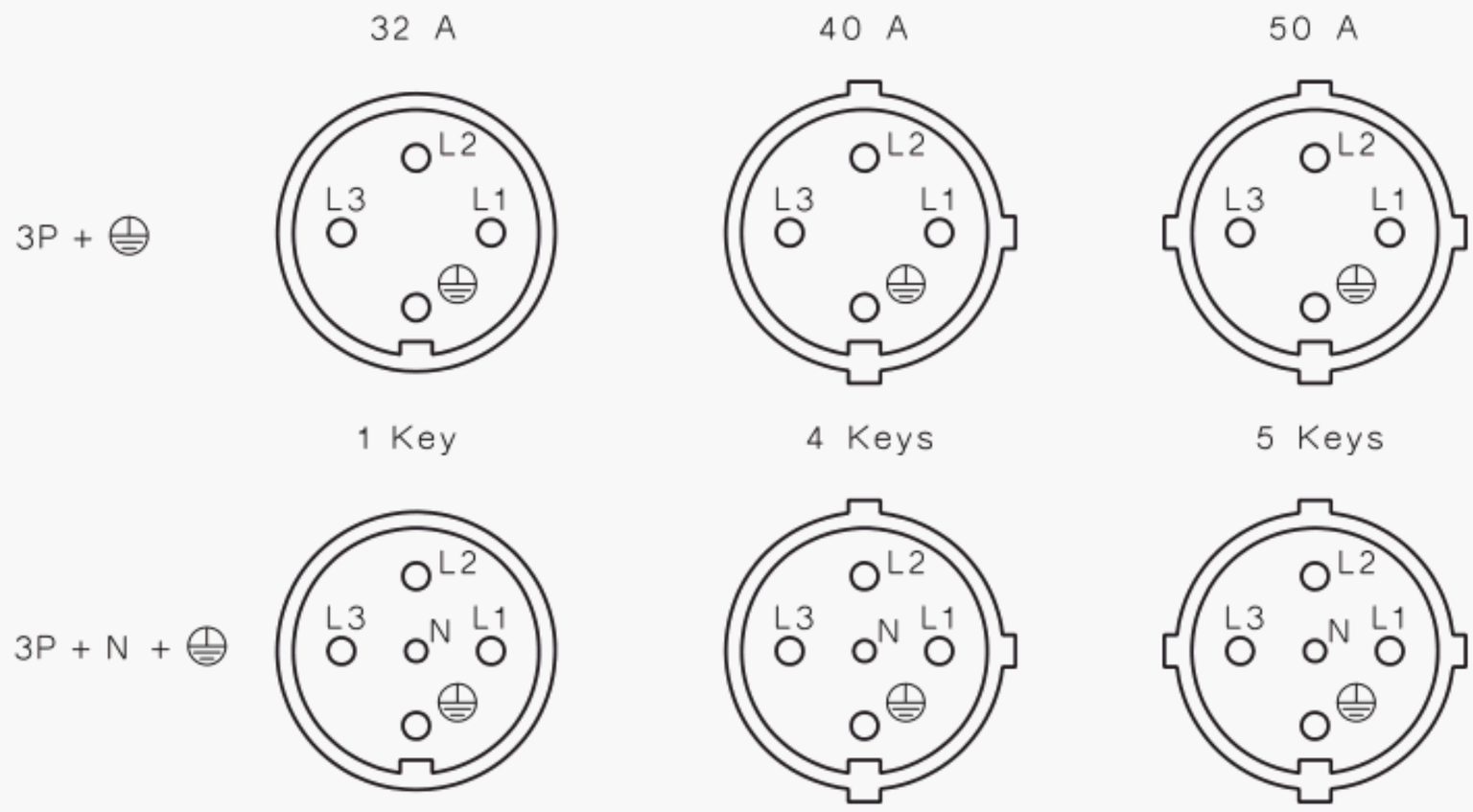

VIEWED FROM DIRECTION A

* The dimensions of the pin and skirt lengths are to the moulding face and will be reduced by the inclusion of a gasket. The gasket is nominally 1.5 thick.

1ST ANGLE PROJECTION

DIMENSIONS IN MILLIMETRES

STANDARD SHEET 10
32 A, 40 A AND 50 A, 415-500 V, 50 Hz PLUGS AND APPLIANCE INLETS

COPYRIGHT

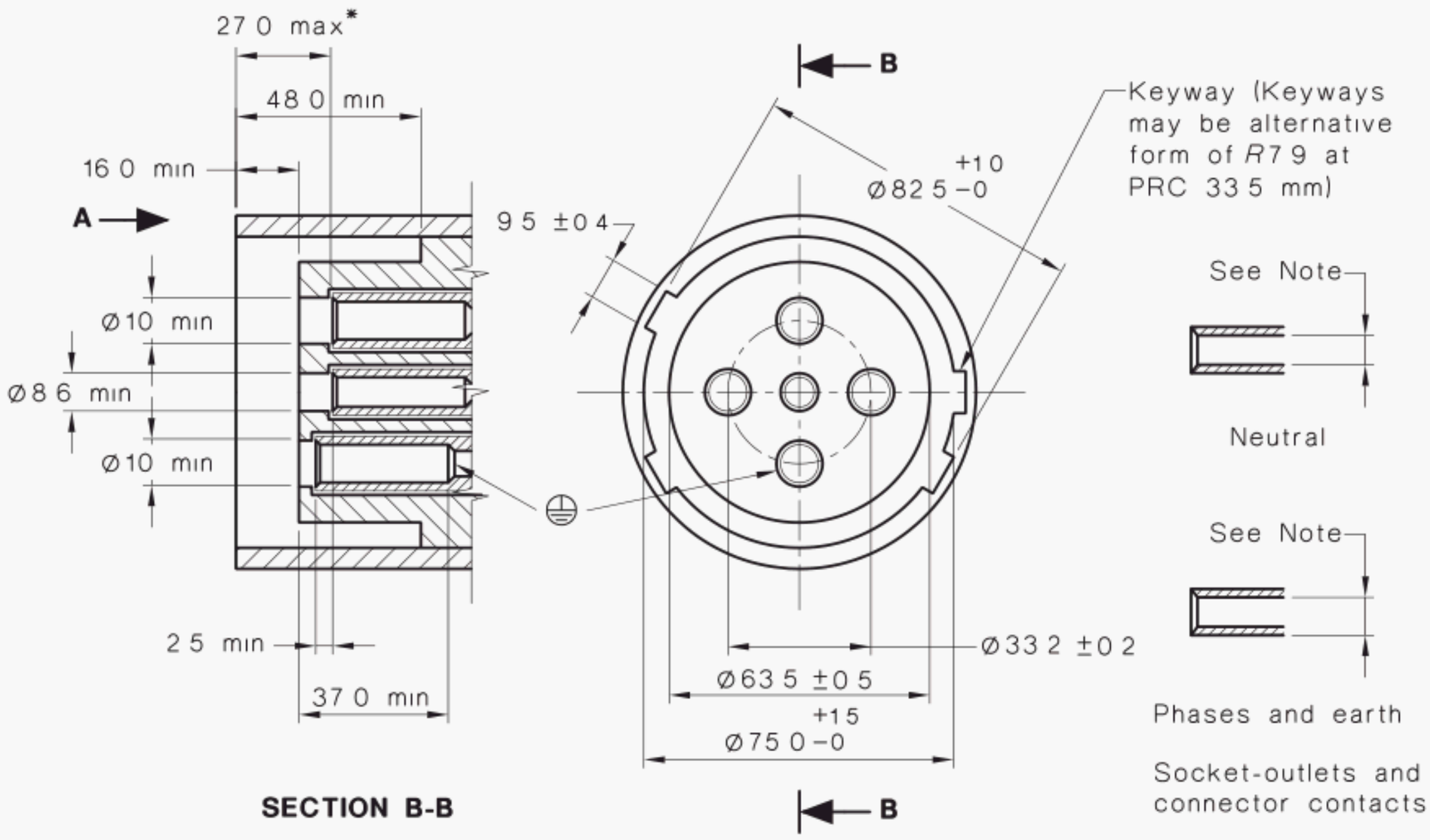

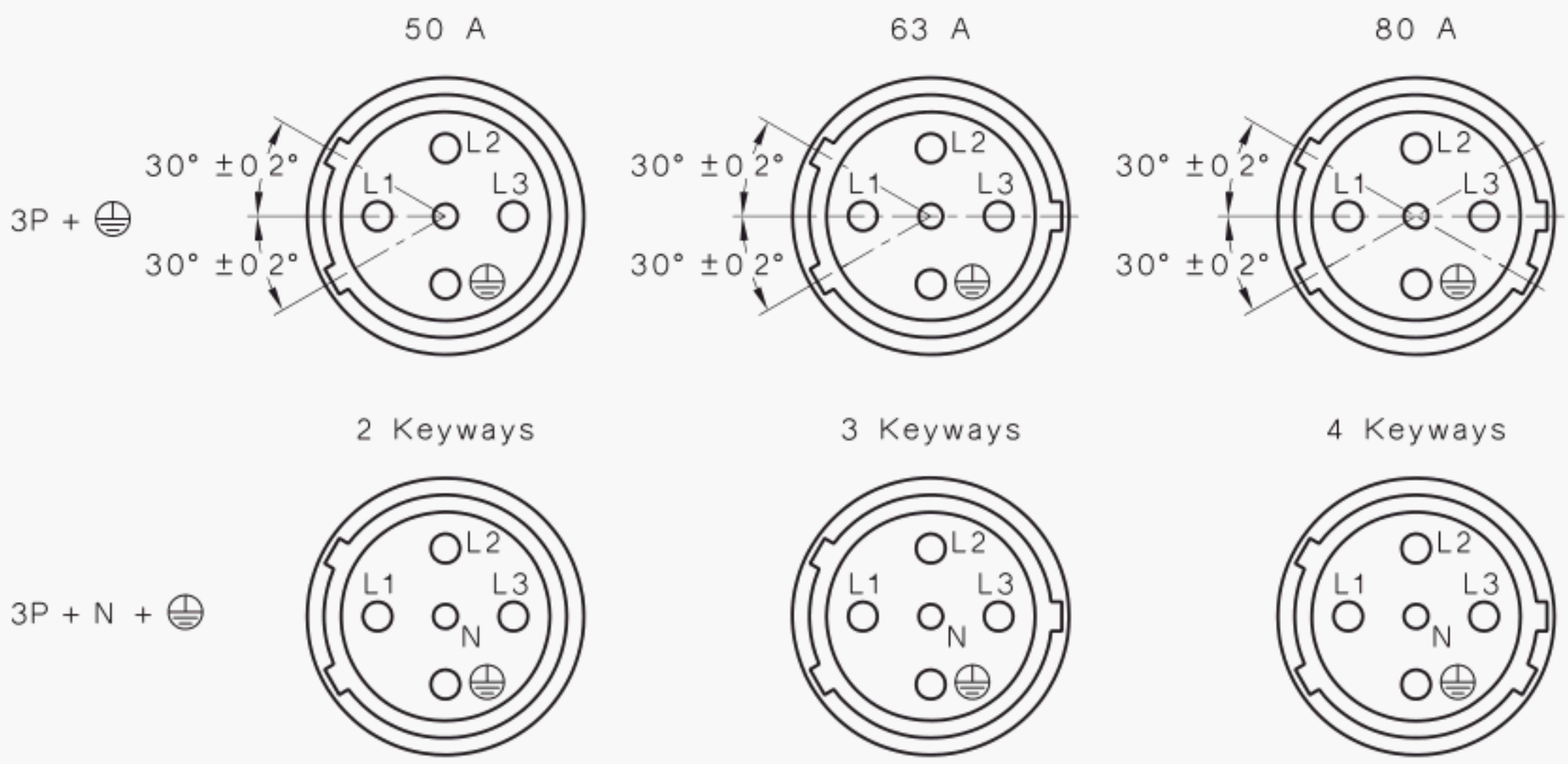

VIEWED FROM DIRECTION A

* 27.0 maximum is to the top of the contact.

NOTE: Internal diameter of socket-outlet and connector contacts to be of a size that meets the requirements of Clauses 15.1 and 15.2.

1ST ANGLE PROJECTION

DIMENSIONS IN MILLIMETRES

STANDARD SHEET 11

50 A, 63 A AND 80 A, 415-500 V, 50 Hz SOCKET-OUTLETS AND CONNECTORS

COPYRIGHT

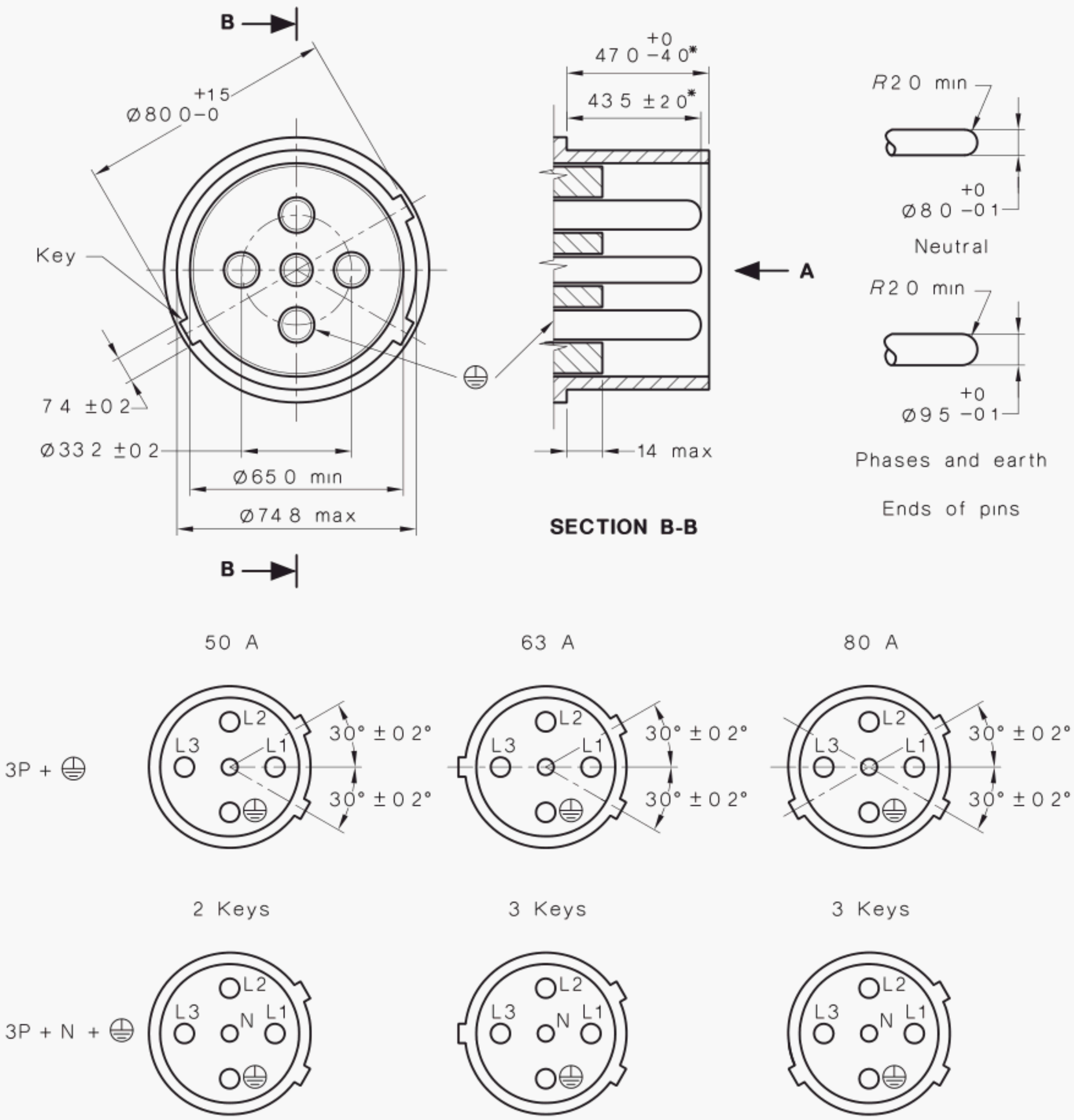

VIEWED FROM DIRECTION A

* The dimensions of the pin and skirt lengths are to the moulding face and will be reduced by the inclusion of a gasket. The gasket is nominally 1.5 thick.

1ST ANGLE PROJECTION

DIMENSIONS IN MILLIMETRES

STANDARD SHEET 12
50 A, 63 A AND 80 A, 415-500 V, 50 Hz PLUGS AND APPLIANCE INLETS

COPYRIGHT

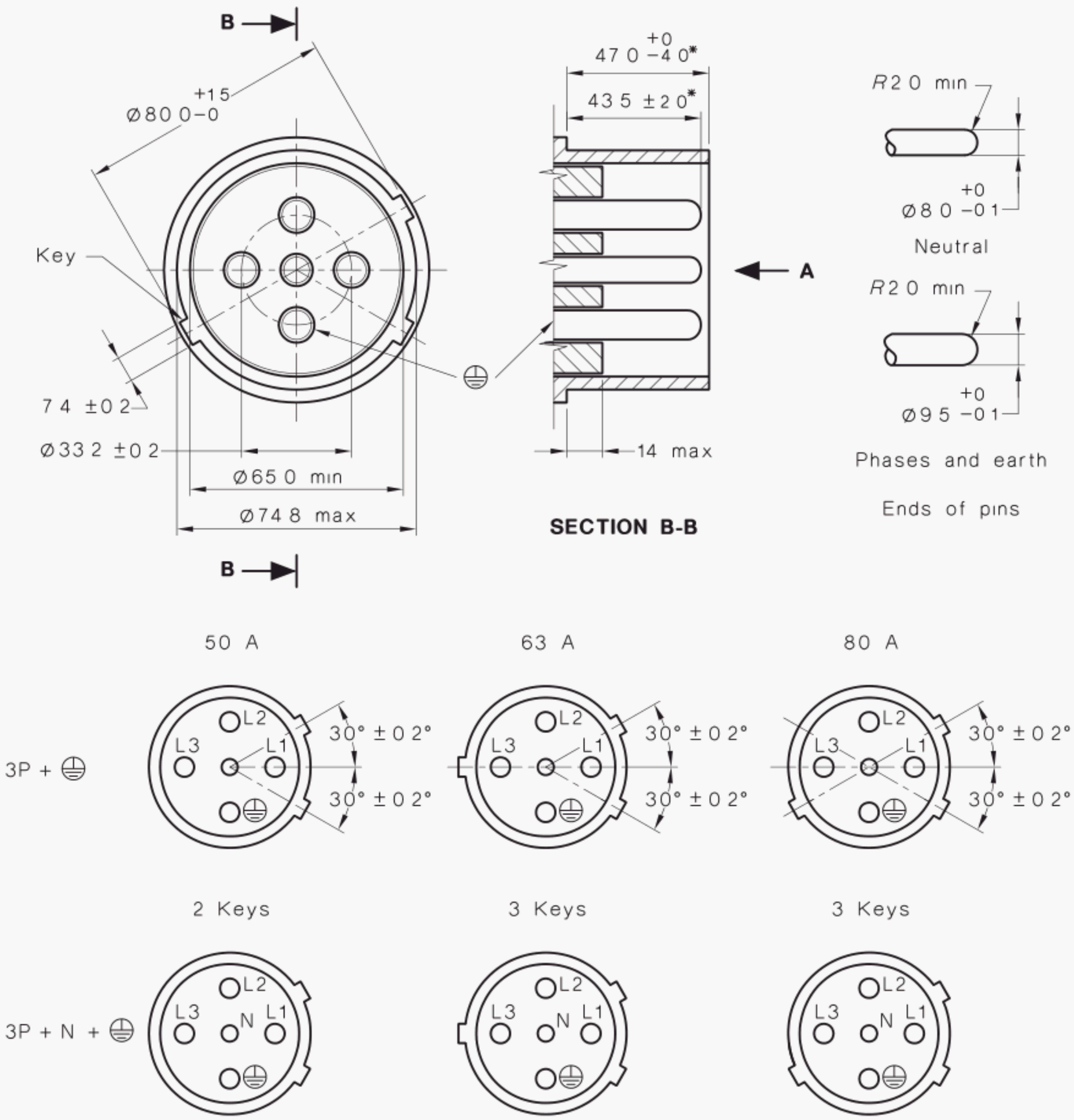

VIEWED FROM DIRECTION A

* The dimensions of the pin and skirt lengths are to the moulding face and will be reduced by the inclusion of a gasket. The gasket is nominally 1.5 thick.

1ST ANGLE PROJECTION

DIMENSIONS IN MILLIMETRES

STANDARD SHEET 12
50 A, 63 A AND 80 A, 415-500 V, 50 Hz PLUGS AND APPLIANCE INLETS

COPYRIGHT

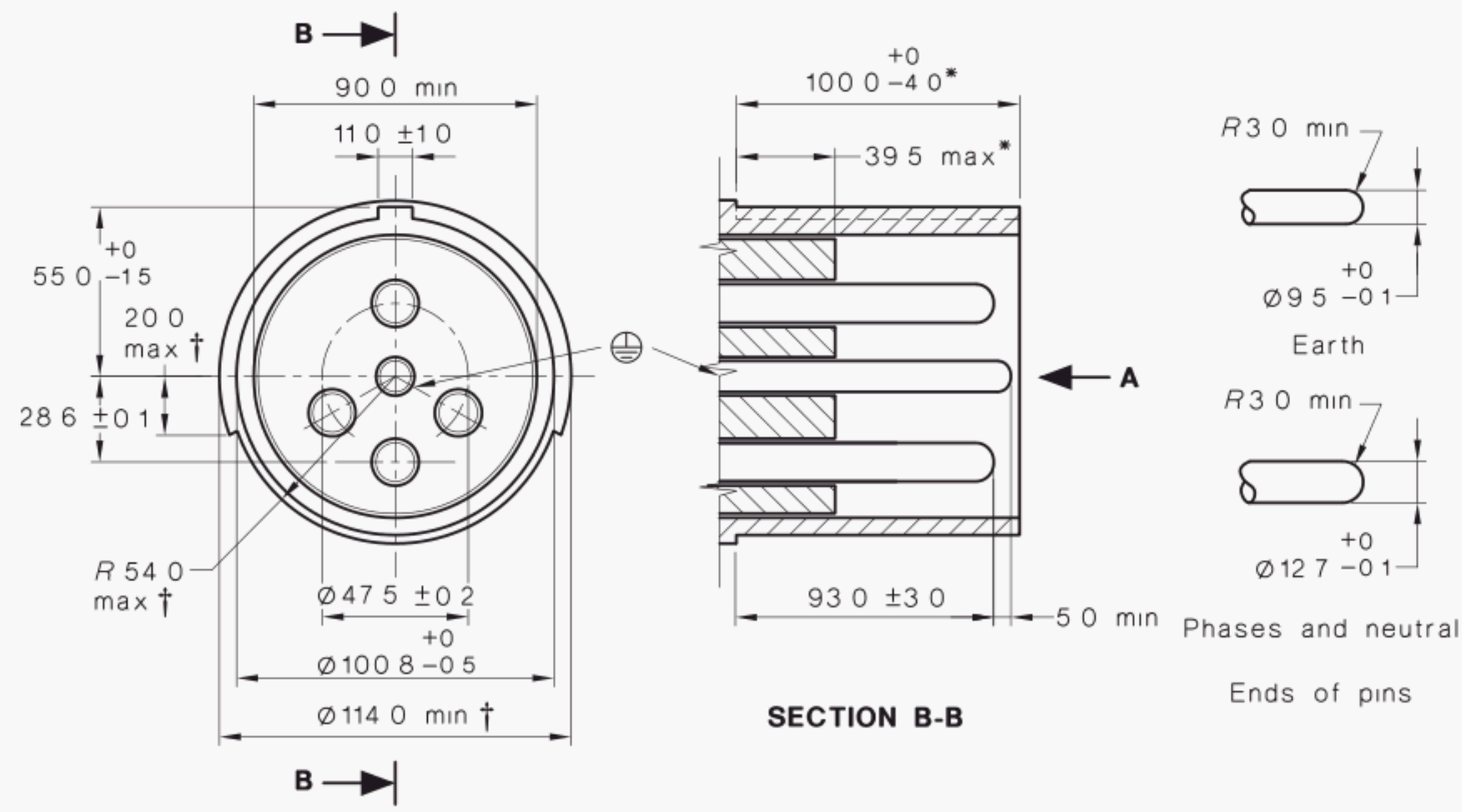

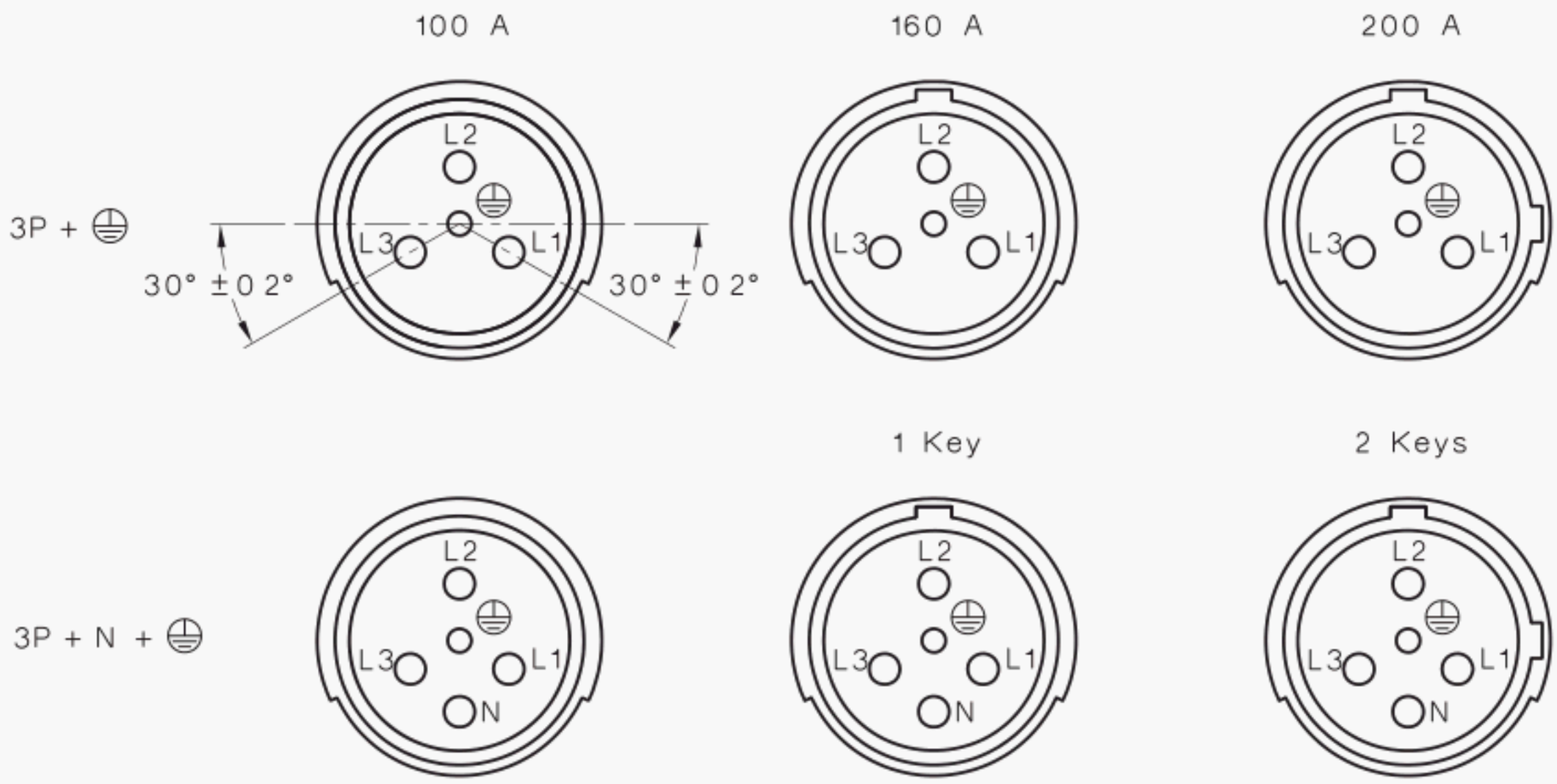

VIEWED FROM DIRECTION A

* The dimensions of the pin and skirt lengths are to the moulding face and will be reduced by the inclusion of a gasket. The gasket is nominally 1.5 thick.

† These dimensions are only relevant when socket-outlet is fitted with optional plug locating skirt.

1ST ANGLE PROJECTION

DIMENSIONS IN MILLIMETRES

STANDARD SHEET 14
100 A, 160 A AND 200 A, 415-500 V, 50 Hz PLUGS AND APPLIANCE INLETS

COPYRIGHT

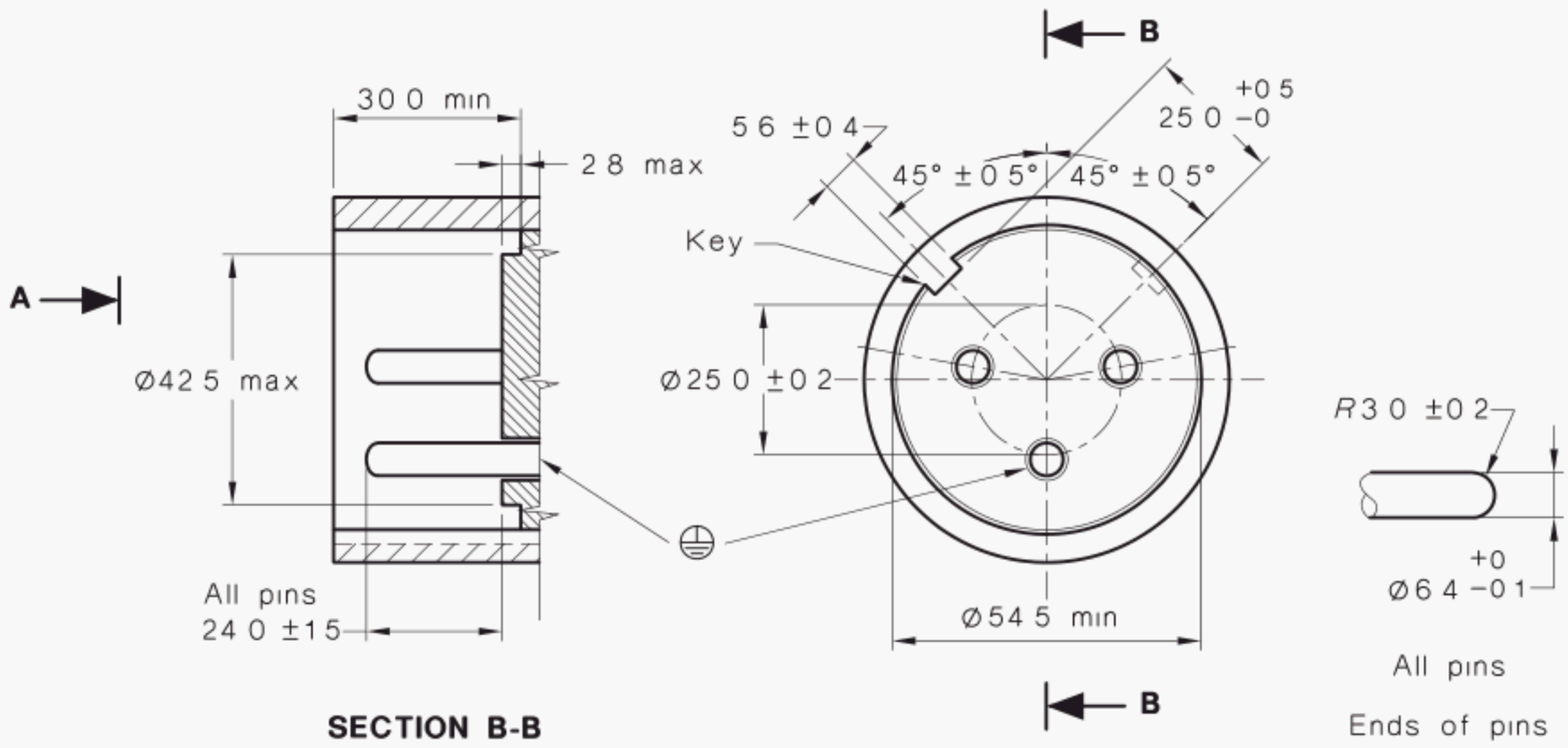

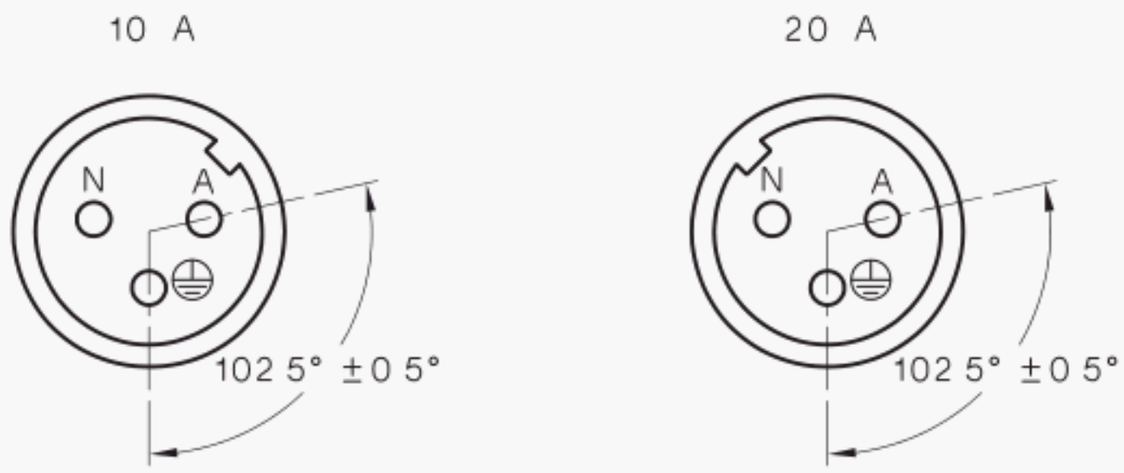

VIEWED FROM DIRECTION A

1ST ANGLE PROJECTION

DIMENSIONS IN MILLIMETRES

STANDARD SHEET 15
10 A AND 20 A, 250 V, 50 Hz APPLIANCE INLETS

COPYRIGHT

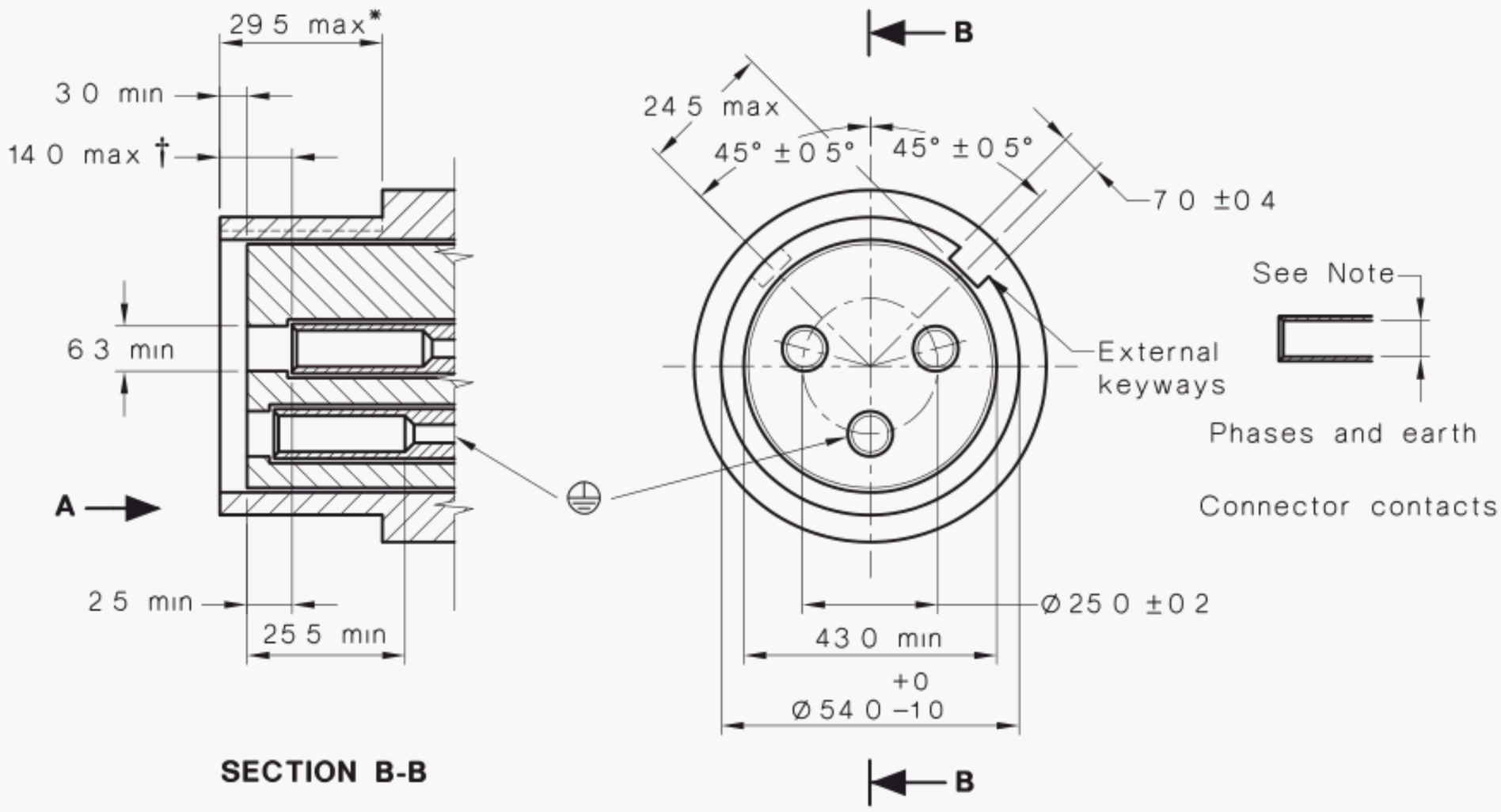

SECTION B-B

VIEWED FROM DIRECTION A

* The dimension of the skirt length is to the moulding face and will be reduced by the inclusion of a gasket. The gasket is nominally 1.5 thick.

† 14 maximum is to the top of the contact.

NOTE: Internal diameter of connector contacts to be of a size that meets the requirements of Clauses 15.1 and 15.2.

1ST ANGLE PROJECTION

DIMENSIONS IN MILLIMETRES

STANDARD SHEET 16
10 A AND 20 A, 250 V, 50 Hz APPLIANCE CONNECTORS

COPYRIGHT

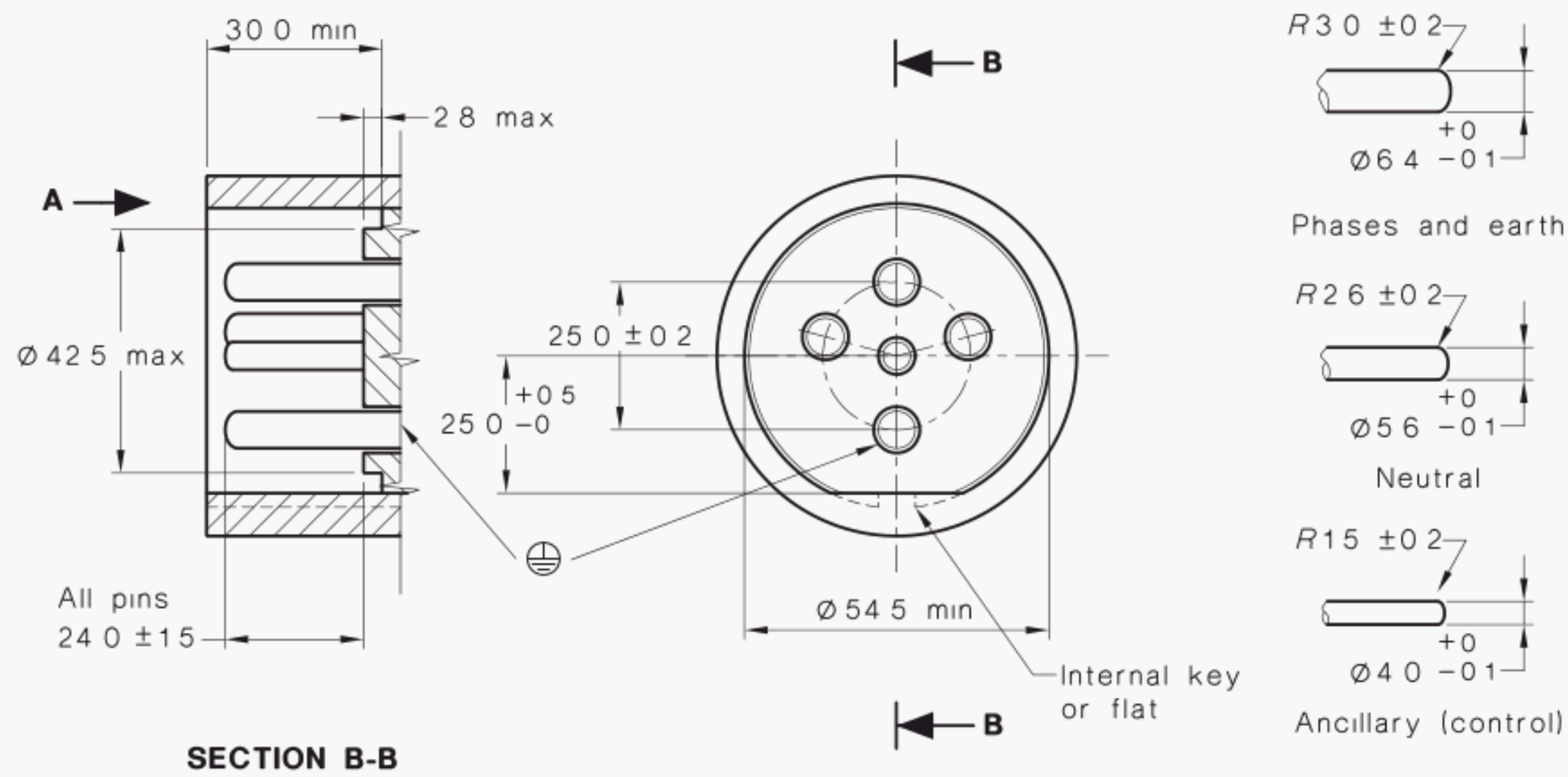

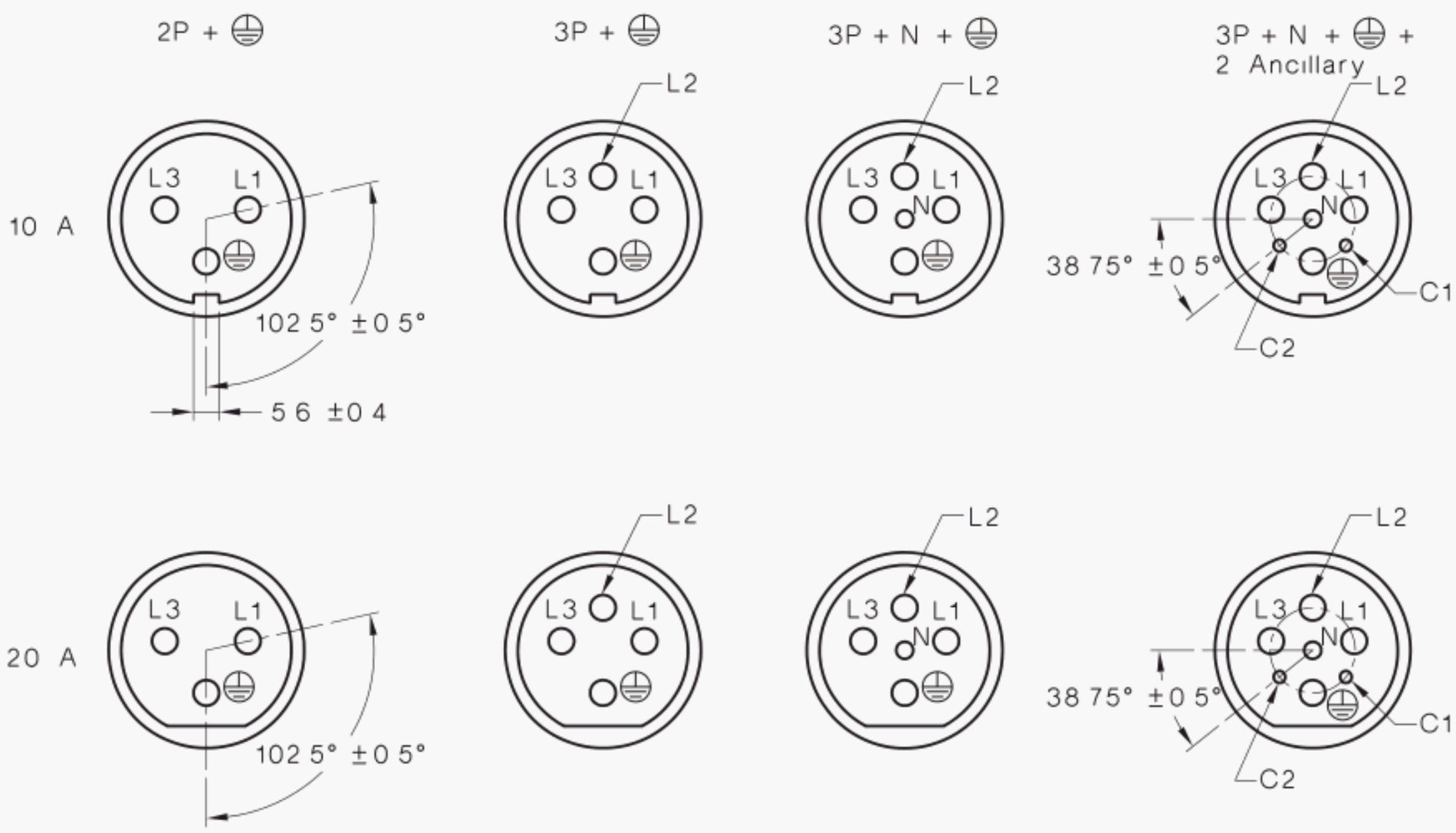

VIEWED FROM DIRECTION A

1ST ANGLE PROJECTION

DIMENSIONS IN MILLIMETRES

STANDARD SHEET 17
10 A AND 20 A, 415-500 V, 50 Hz APPLIANCE INLETS

COPYRIGHT

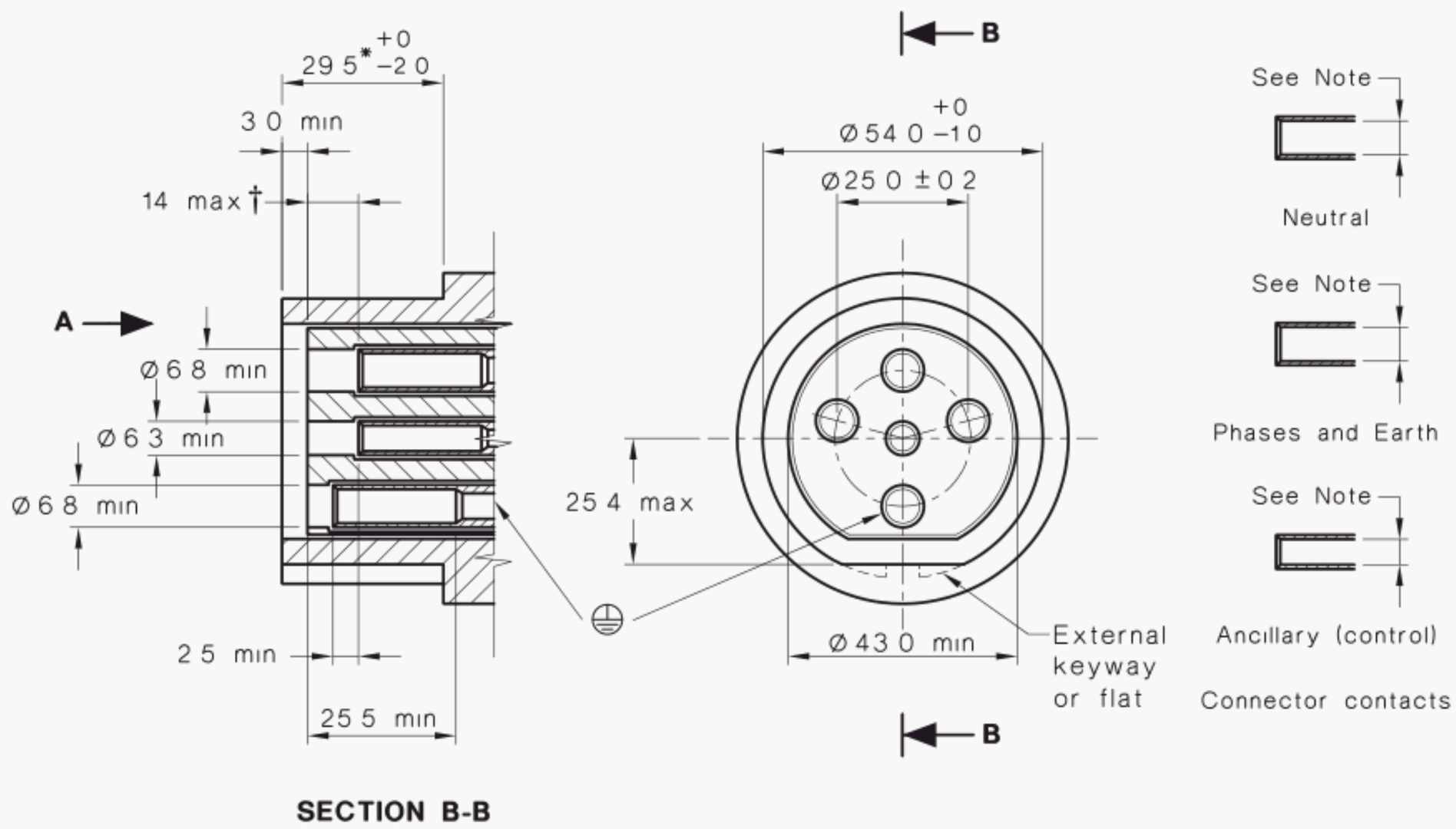

VIEWED FROM DIRECTION A

* The dimension of the skirt length is to the moulding face and will be reduced by the inclusion of a gasket. The gasket is nominally 1.5 thick.

† 14 maximum is to the top of the contact.

NOTE: Internal diameter of connector contacts to be of a size that meets the requirements of Clauses 15.1 and 15.2.

1ST ANGLE PROJECTION

DIMENSIONS IN MILLIMETRES

STANDARD SHEET 18
10 A AND 20 A, 415-500 V, 50 Hz APPLIANCE CONNECTORS

COPYRIGHT

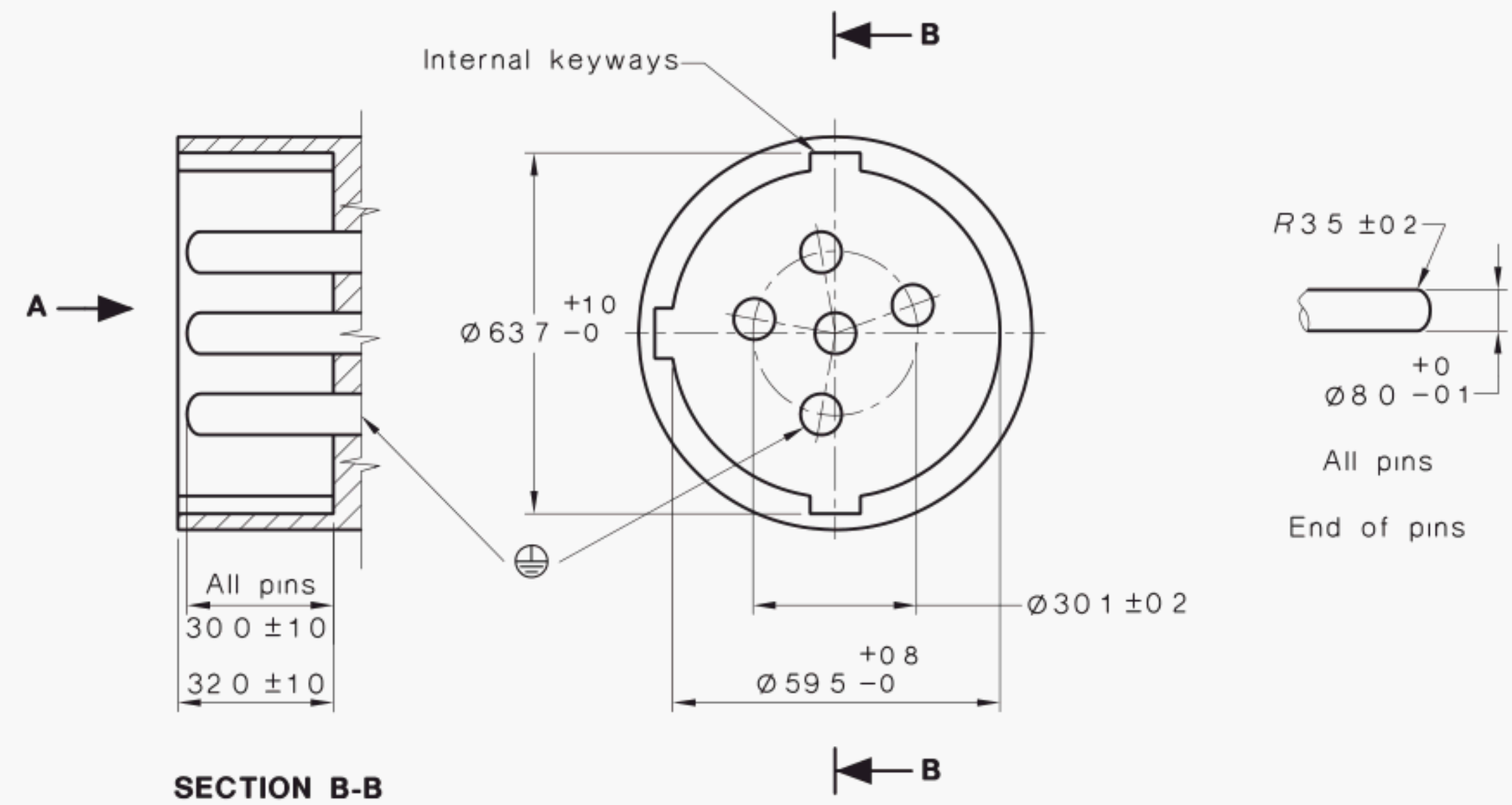

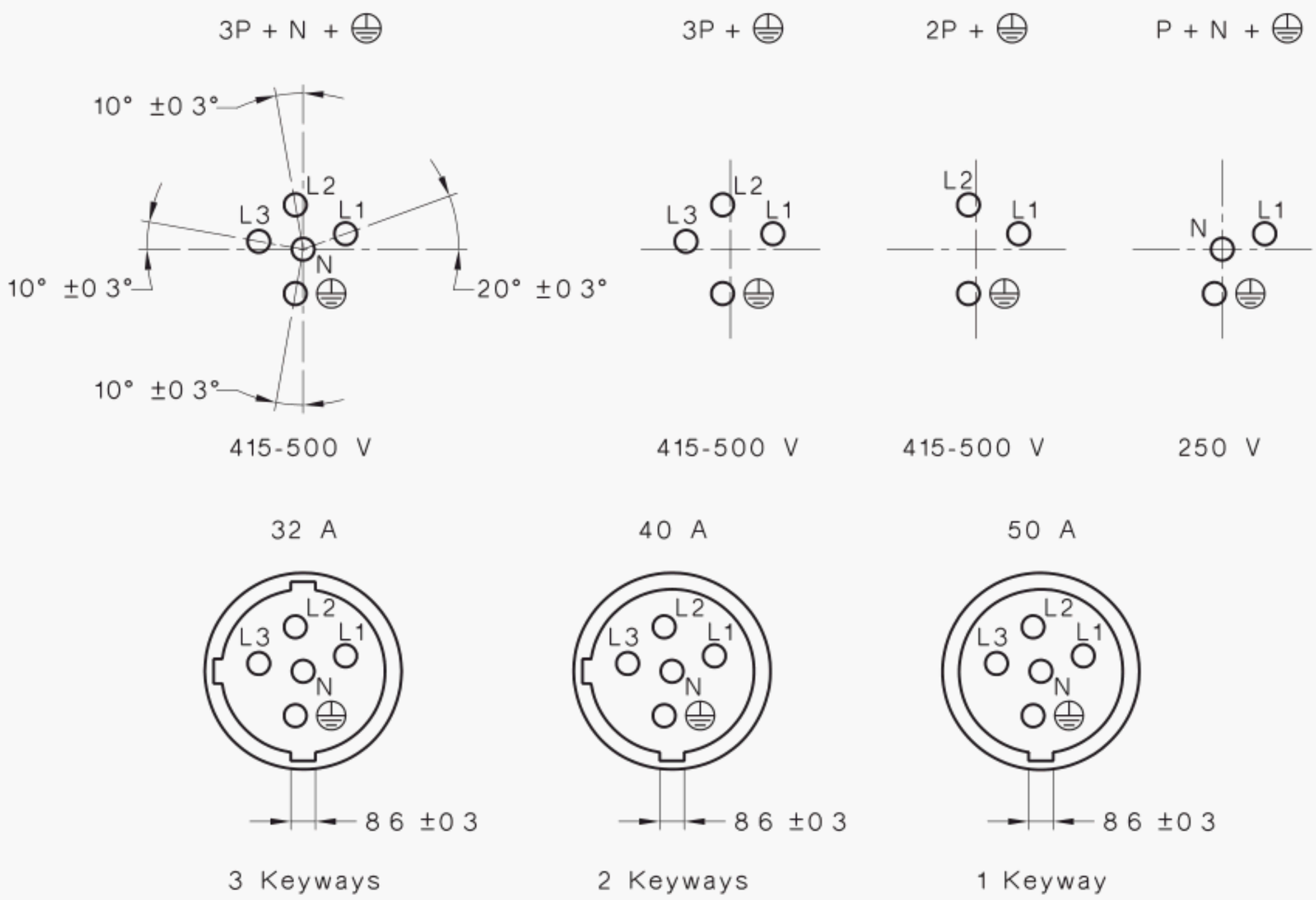

VIEWED FROM DIRECTION A

1ST ANGLE PROJECTION

DIMENSIONS IN MILLIMETRES

STANDARD SHEET 19
32 A, 40 A AND 50 A, 250 V, 415-500 V, 50 Hz APPLIANCE INLETS

COPYRIGHT

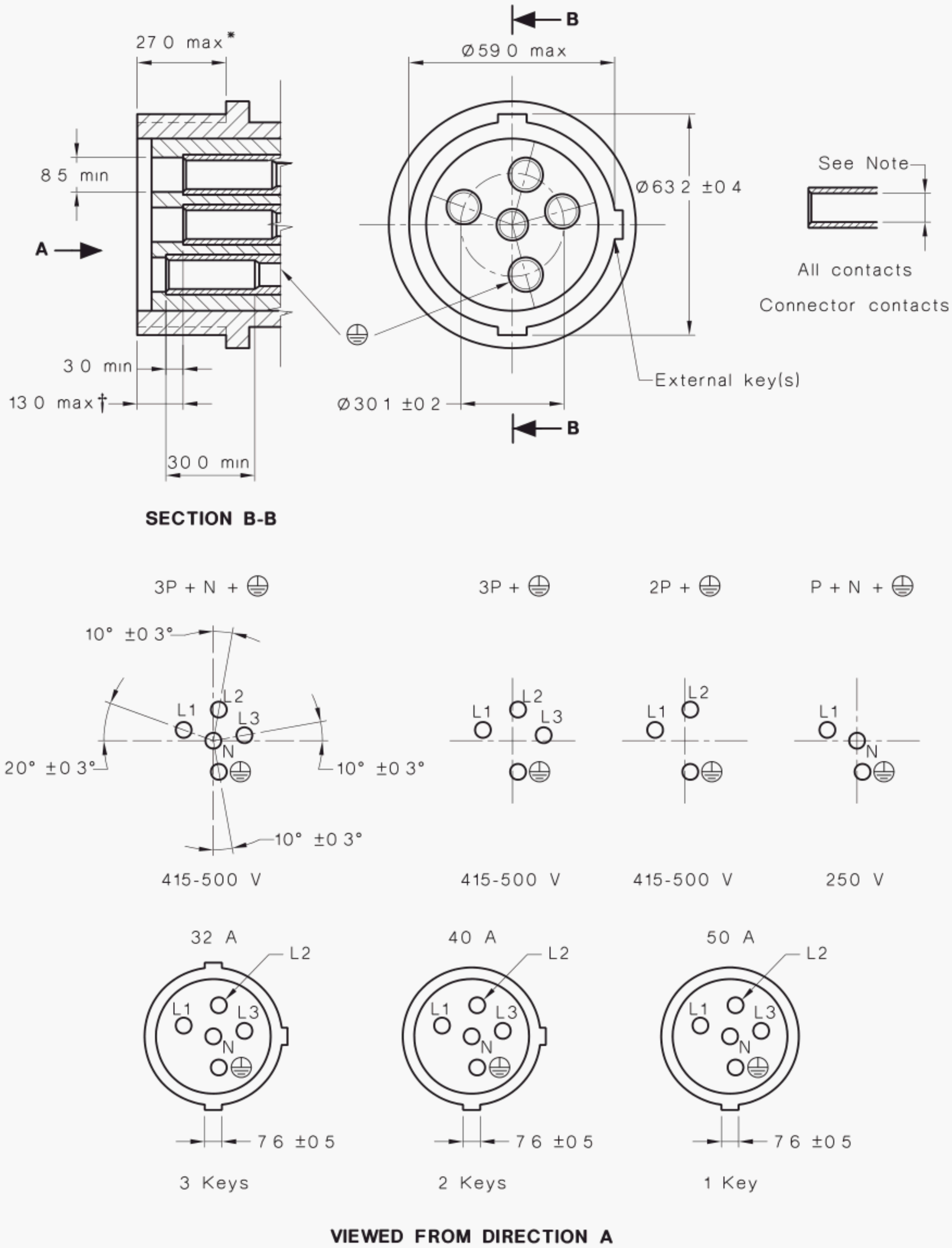

* The dimension of the skirt length is to the moulding face and will be reduced by the inclusion of a gasket. The gasket is nominally 1.5 thick.

† 13.0 maximum is to the top of the contact.

NOTE: Internal diameter of connector contacts to be of a size that meets the requirements of Clauses 15.1 and 15.2.

1ST ANGLE PROJECTION

DIMENSIONS IN MILLIMETRES

STANDARD SHEET 20
32 A, 40 A AND 50 A, 250 V, 415-500 V, 50 Hz APPLIANCE CONNECTORS

COPYRIGHT

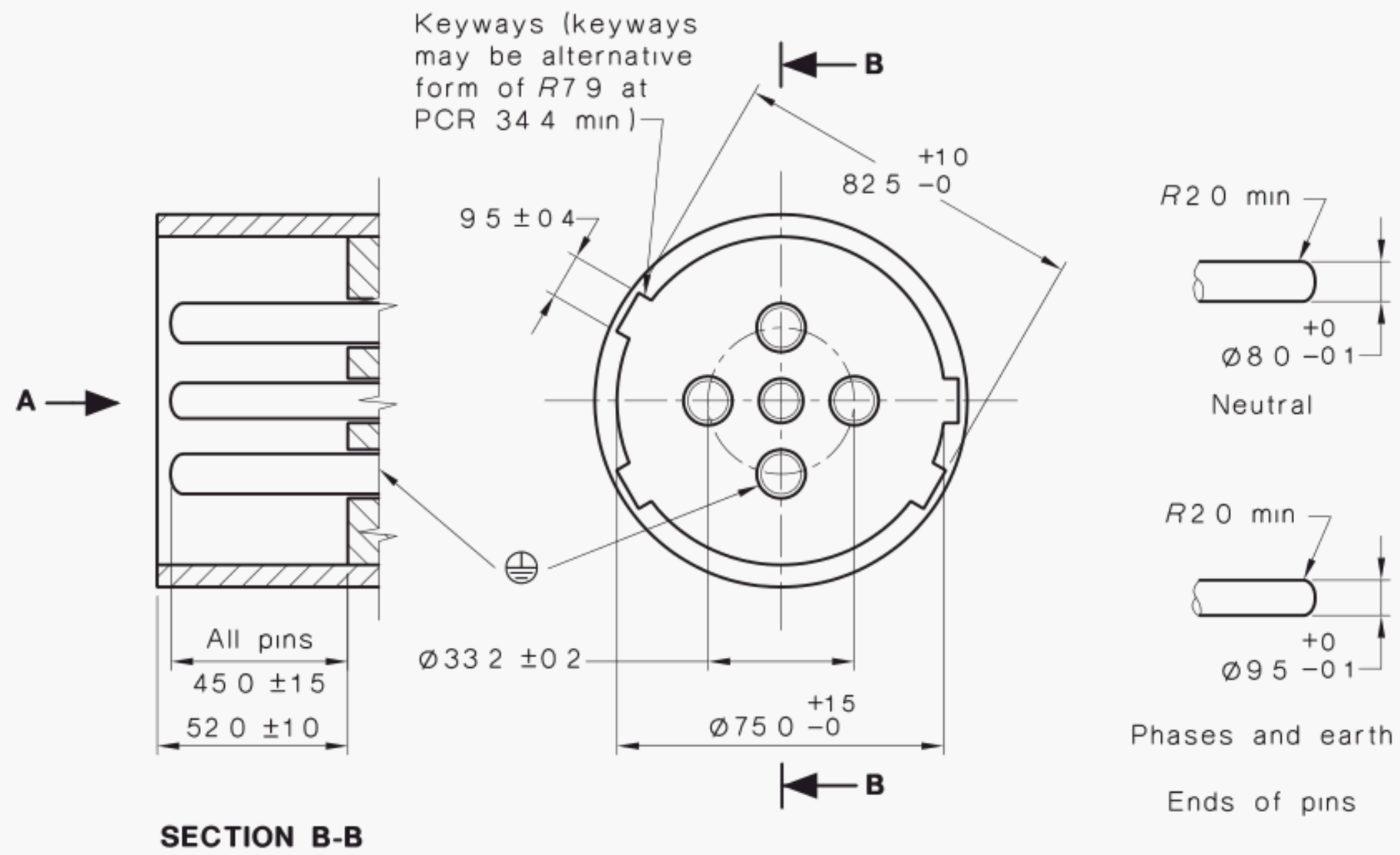

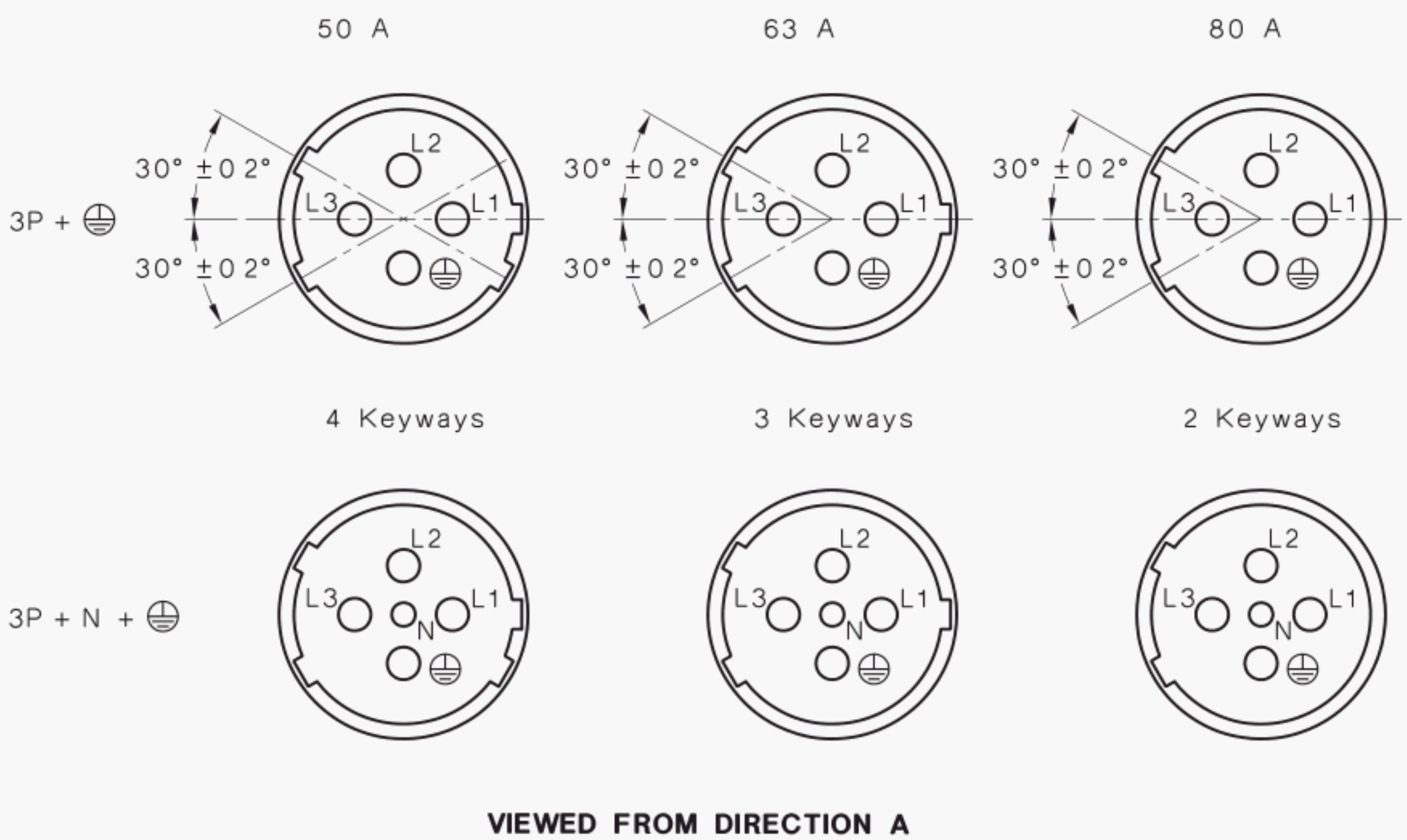

1ST ANGLE PROJECTION

DIMENSIONS IN MILLIMETRES

STANDARD SHEET 21
50 A, 63 A AND 80 A, 415-500 V, 50 Hz APPLIANCE INLETS

COPYRIGHT

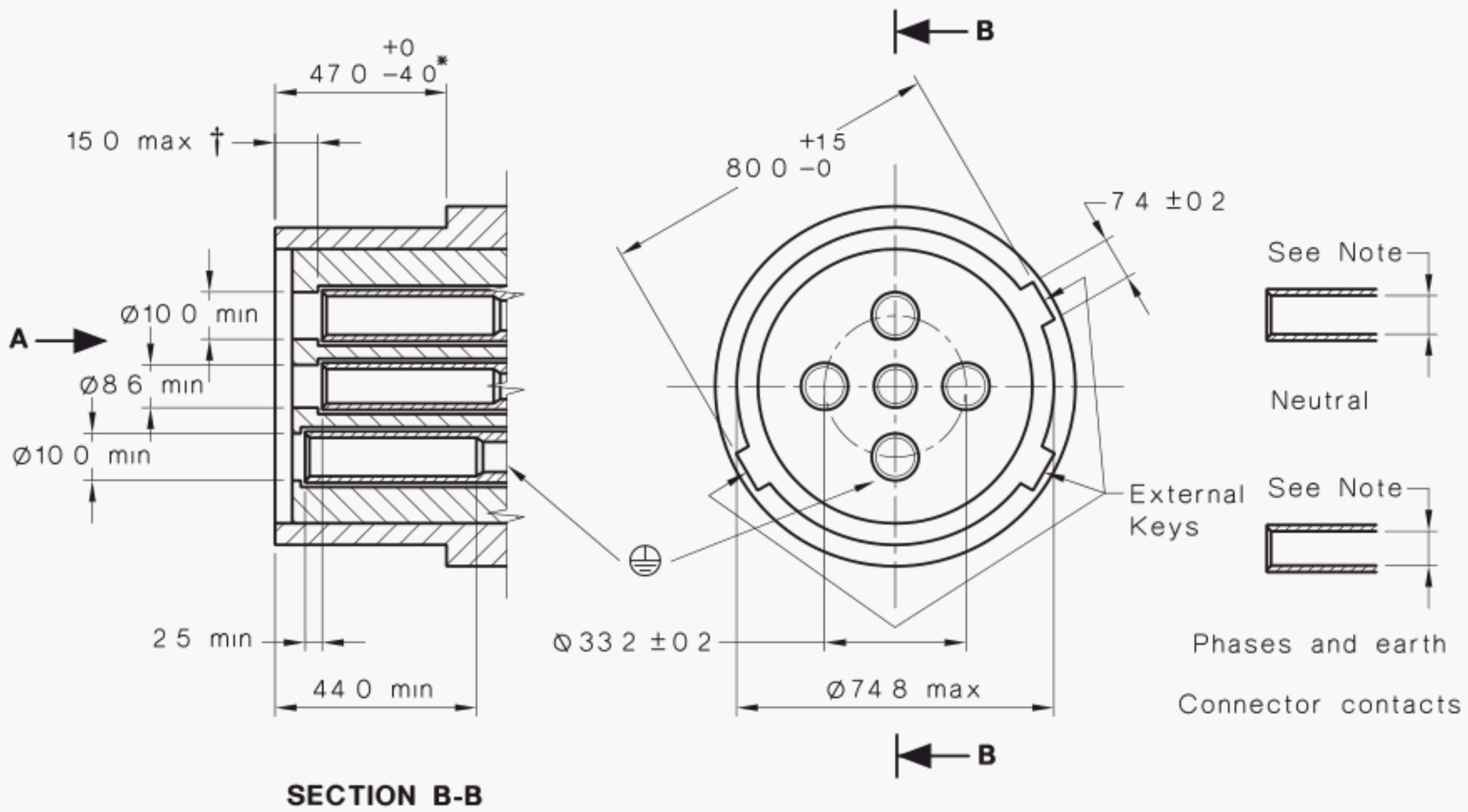

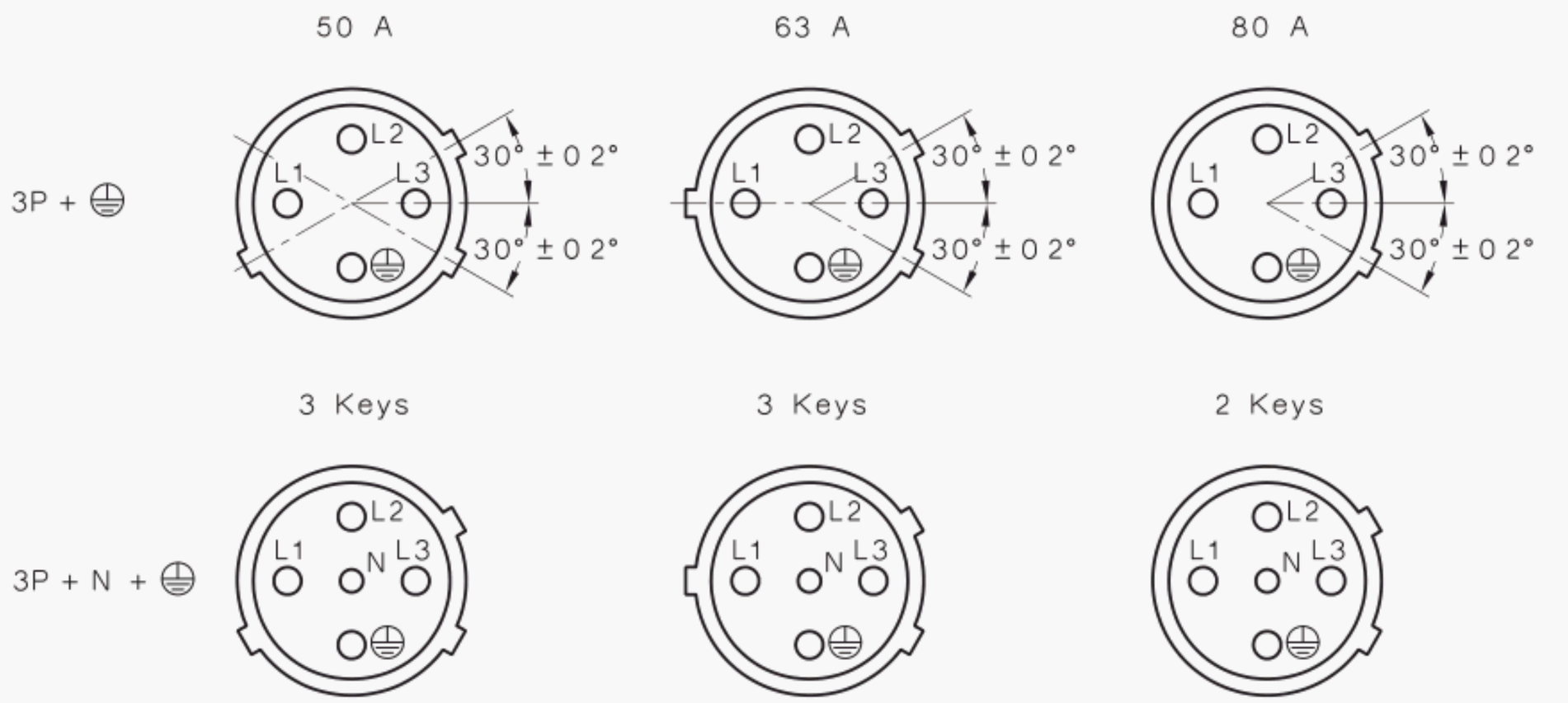

VIEWED FROM DIRECTION A

* The dimension of the skirt length is to the moulding face and will be reduced by the inclusion of a gasket. The gasket is nominally 1.5 thick.

† 15 maximum is to the top of the contact.

NOTE: Internal diameter of connector contacts to be of a size that meets the requirements of Clauses 15.1 and 15.2.

1ST ANGLE PROJECTION

DIMENSIONS IN MILLIMETRES

STANDARD SHEET 22
50 A, 63 A AND 80 A, 415-500 V, 50 Hz APPLIANCE CONNECTORS

COPYRIGHT

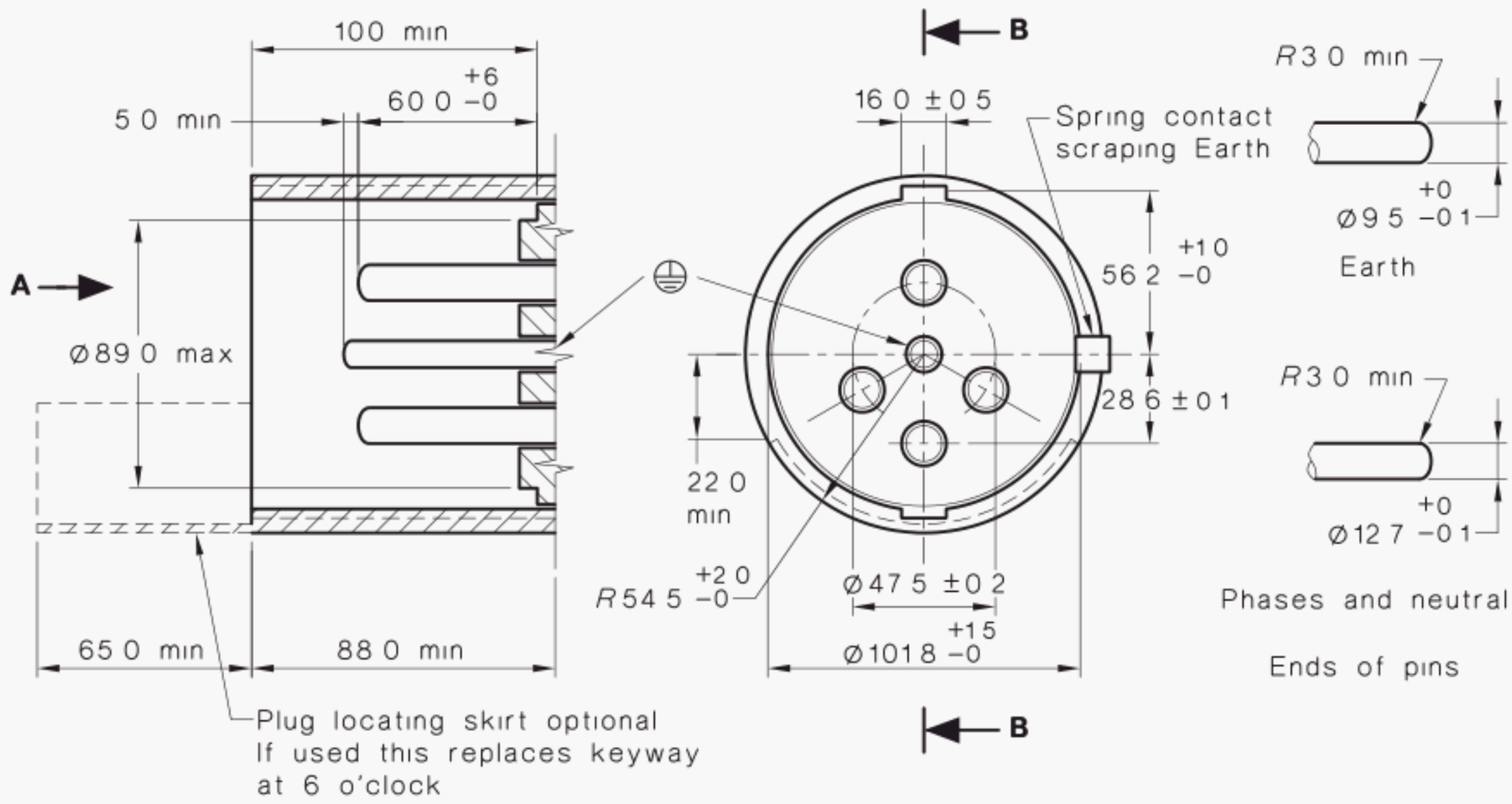

SECTION B-B

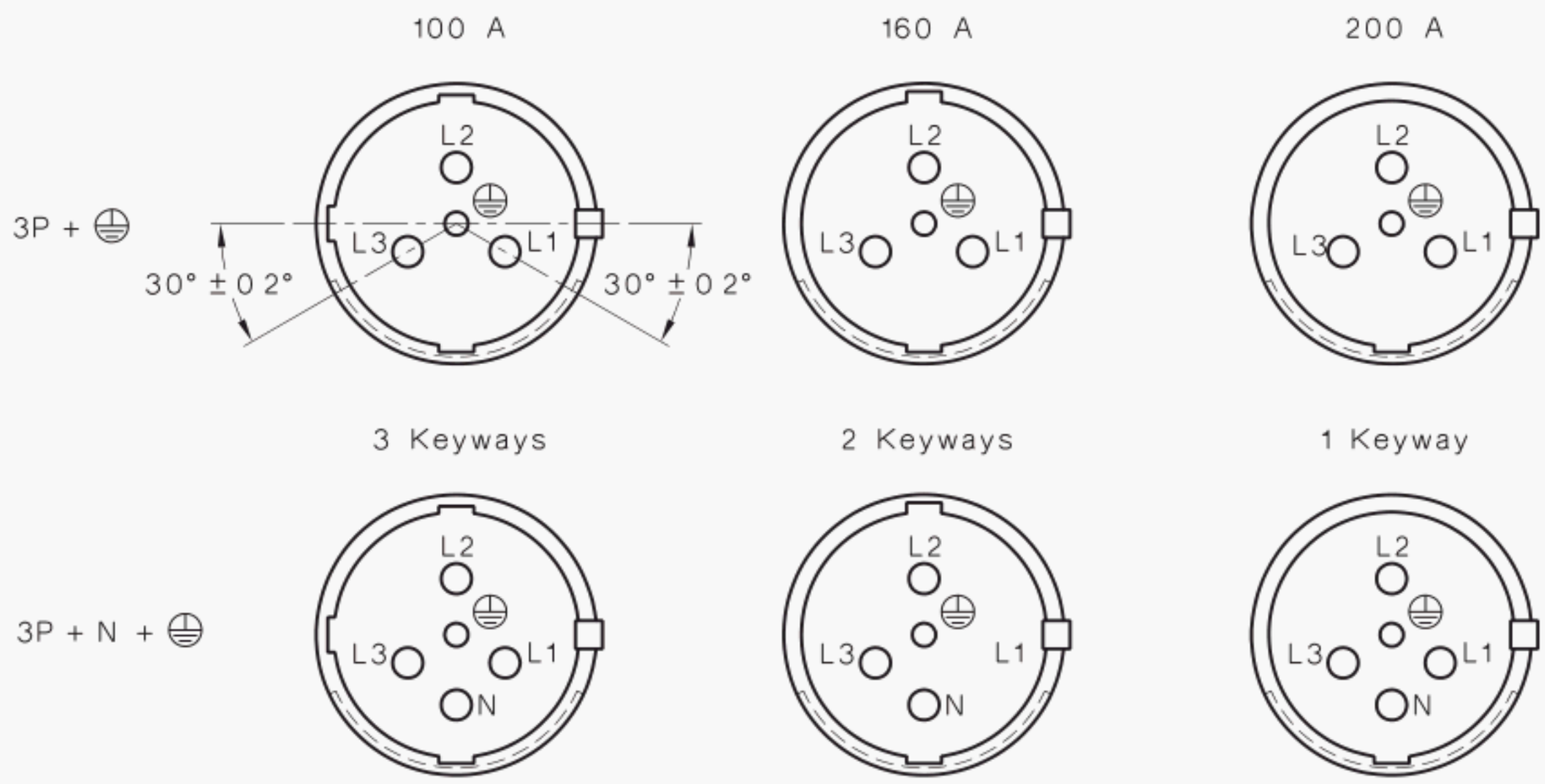

VIEWED FROM DIRECTION A

1ST ANGLE PROJECTION

DIMENSIONS IN MILLIMETRES

STANDARD SHEET 23
100 A, 160 A AND 200 A, 415-500 V, 50 Hz APPLIANCE INLETS

COPYRIGHT

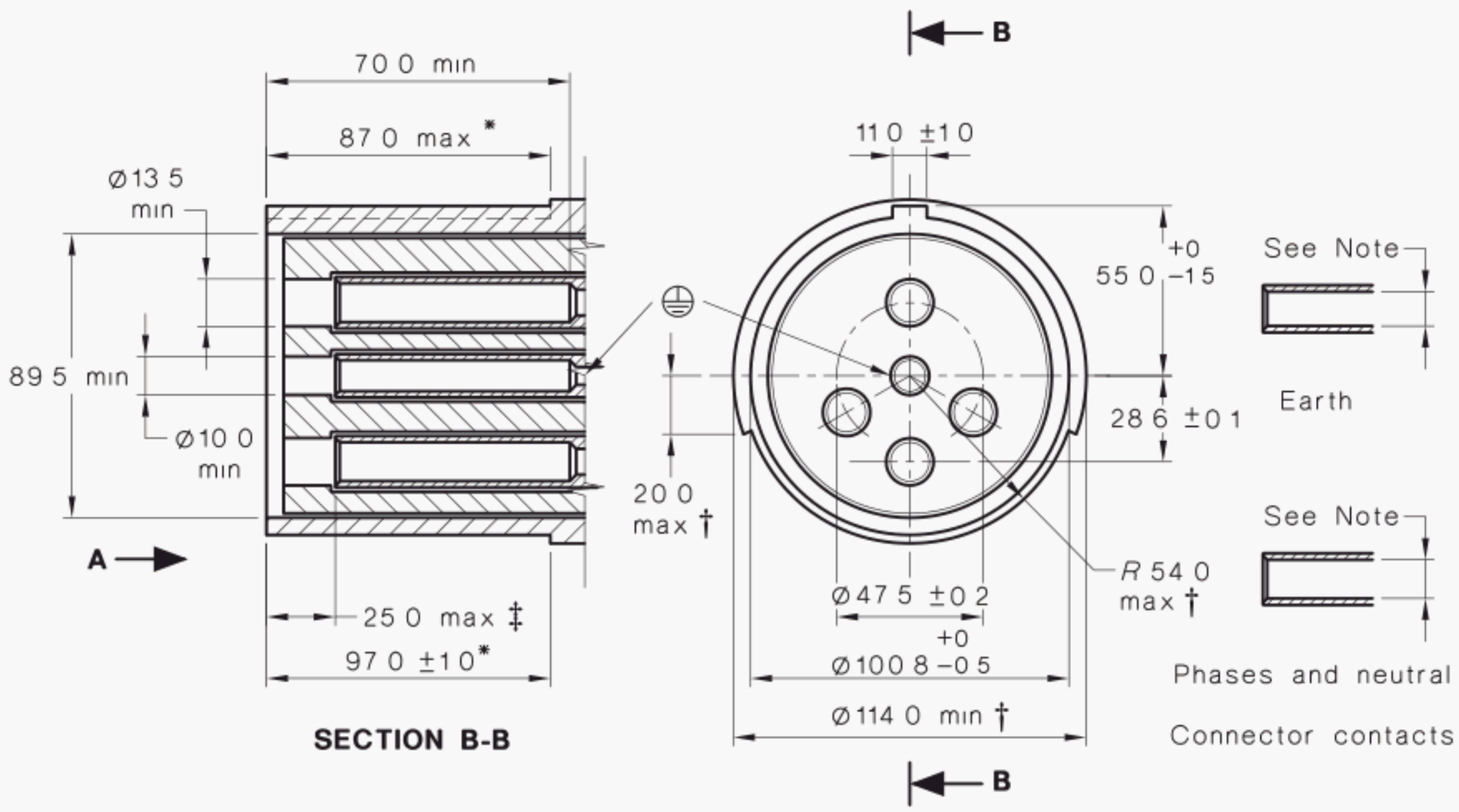

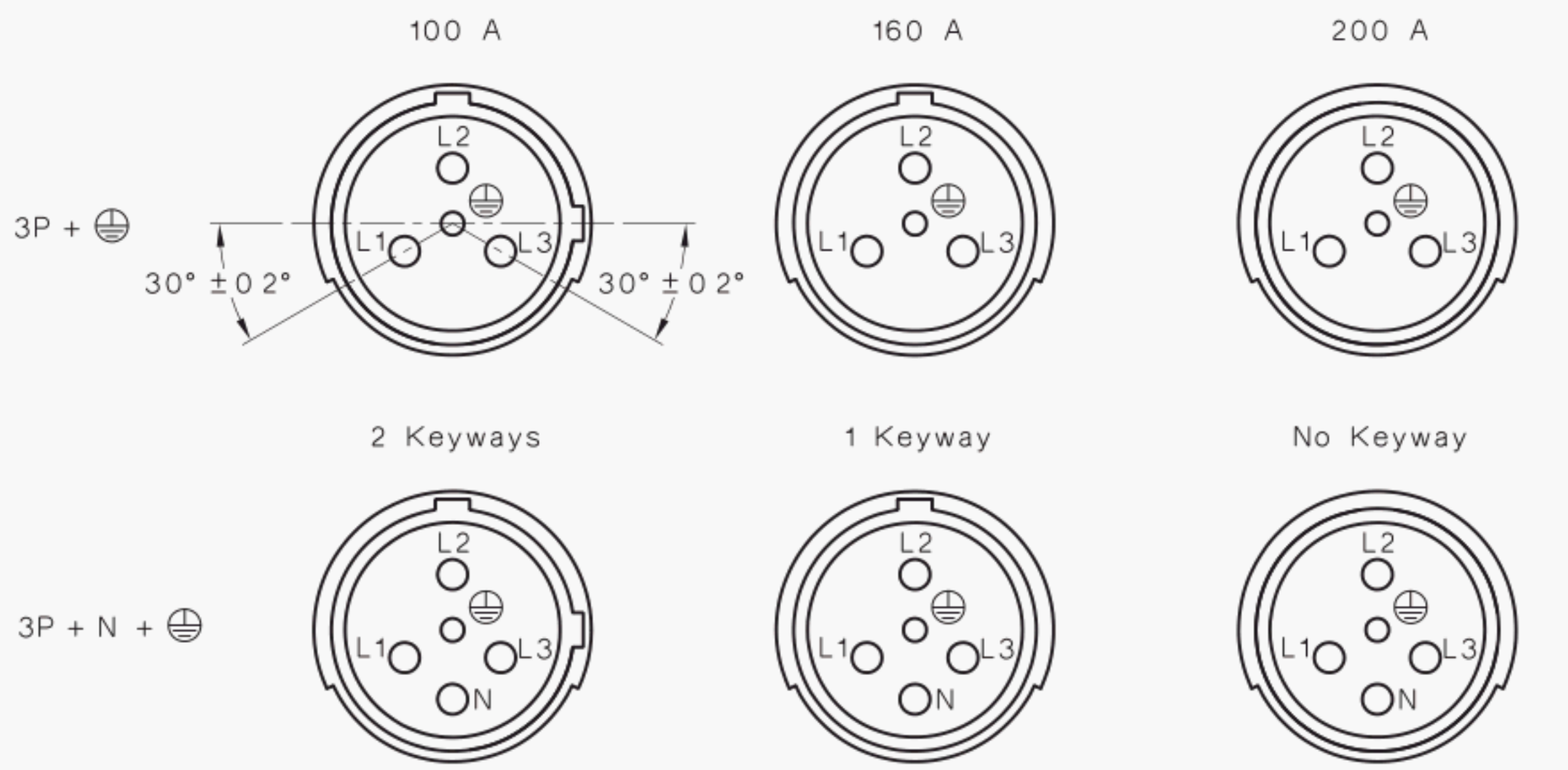

VIEWED FROM DIRECTION A

* The dimensions of the skirt lengths are to the moulding face and will be reduced by the inclusion of a gasket. The gasket is nominally 1.5 thick.

† These dimensions are only relevant when mated with the corresponding appliance inlet which has the optional plug locating skirt.

‡ 25 maximum is to the top of the contact.

NOTE: Internal diameter of connector contacts to be of a size that meets the requirements of Clauses 15.1 and 15.2.

1ST ANGLE PROJECTION

DIMENSIONS IN MILLIMETRES

STANDARD SHEET 24
100 A, 160 A AND 200 A, 415-500 V, 50 Hz APPLIANCE CONNECTORS

COPYRIGHT

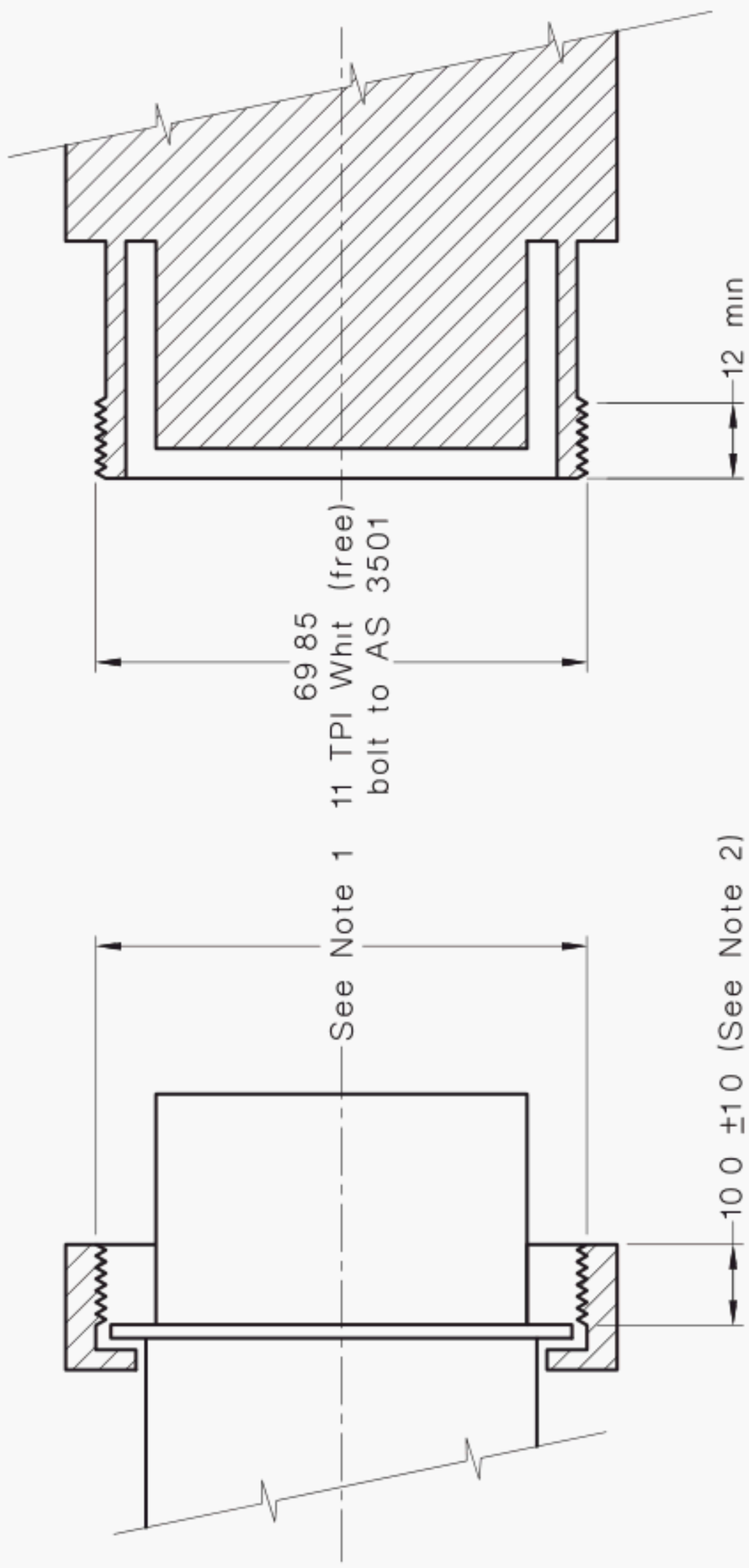

NOTES:

1 Female thread to be 11 TPI Whit. with the following dimensions:

(a) Major diameter—70.0 min. 70.4 max.

(b) Minor diameter—67 min. 67.5 max.

2 This dimension will be reduced by the inclusion of a gasket as shown on Standard Sheets 1 to 10.

DIMENSIONS IN MILLIMETRES

STANDARD SHEET 25

RETAINING MEANS FOR 10 A TO 50 A PLUGS, SOCKET-OUTLETS, APPLIANCE INLETS AND CONNECTORS

COPYRIGHT

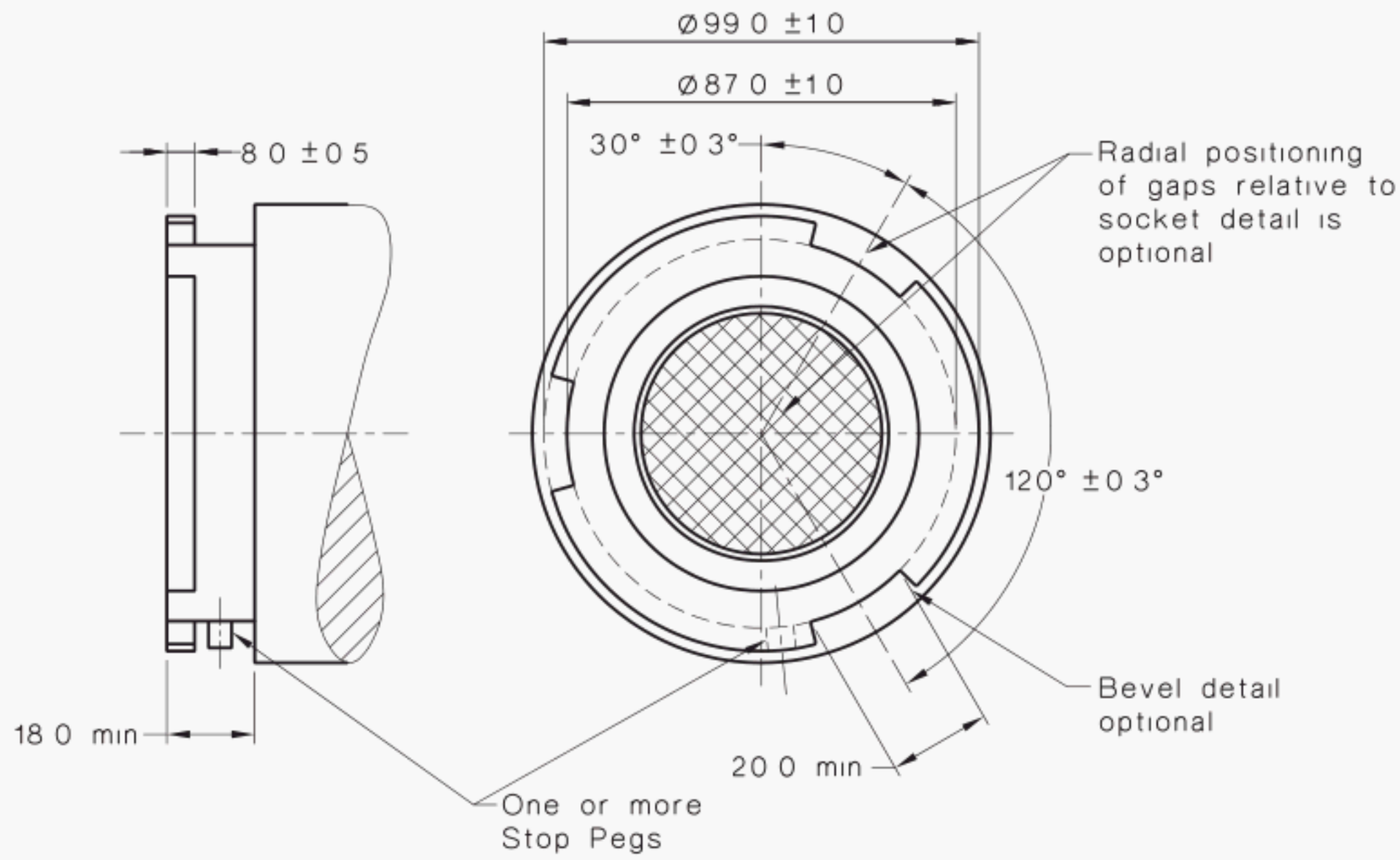

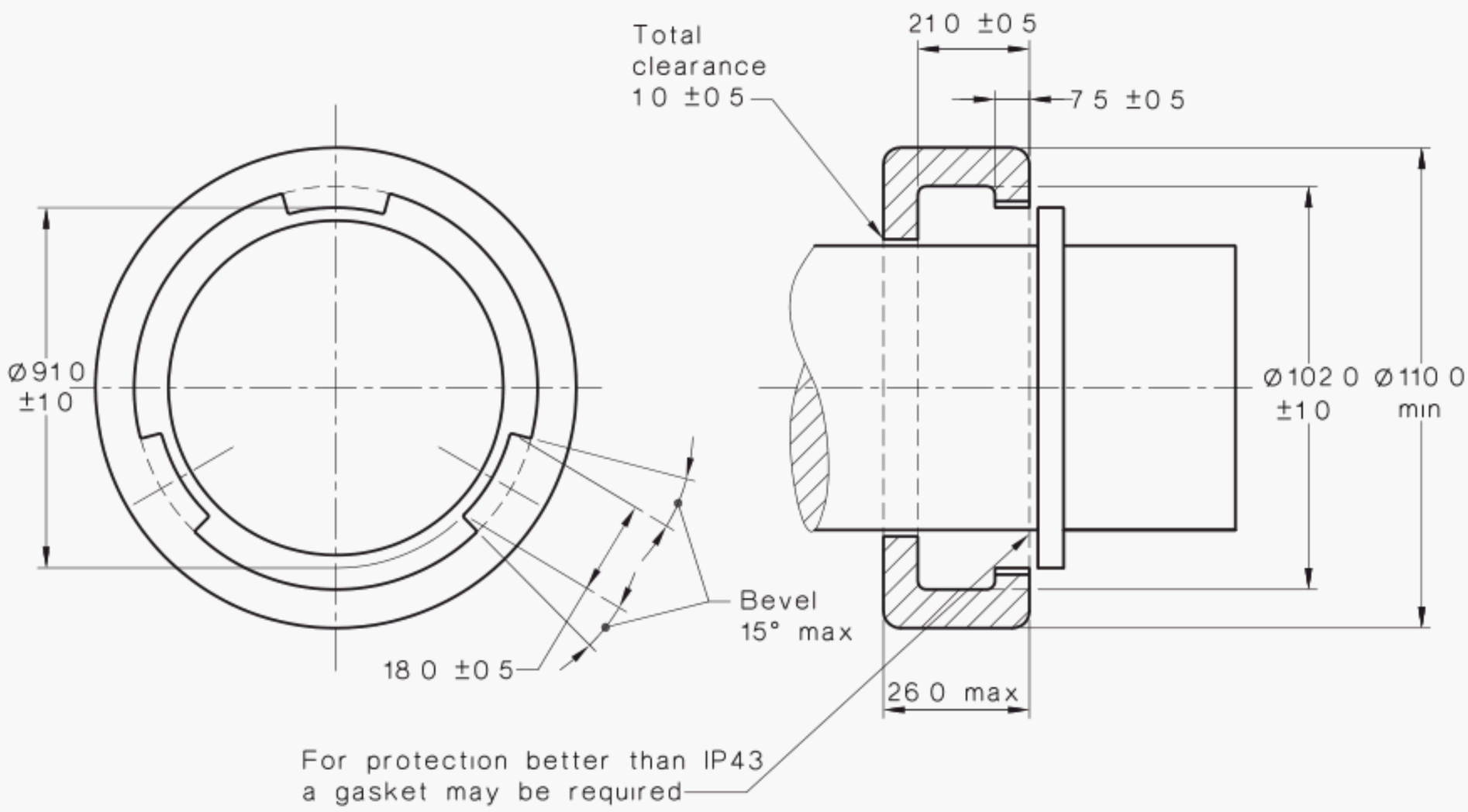

NOTE: The sketches are not intended to govern design except as regards the dimensions shown.

DIMENSIONS IN MILLIMETRES

STANDARD SHEET 26
RETAINING MEANS FOR 50 A, 63 A AND 80 A
PLUGS, SOCKET-OUTLETS, APPLIANCE INLETS AND CONNECTORS

COPYRIGHT

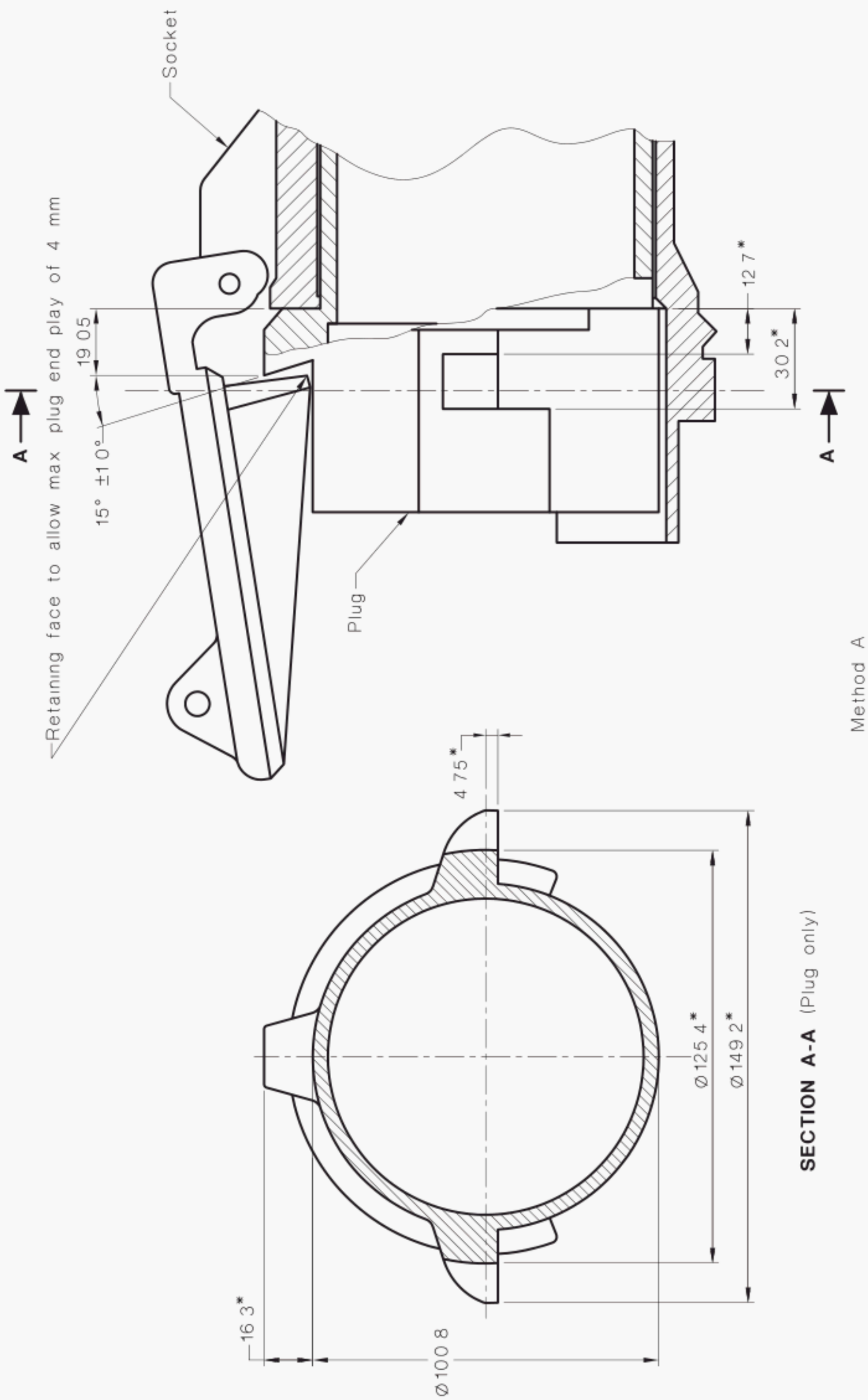

* Dimensions to allow for installation and extraction device for plug.

NOTE: The sketches are not intended to govern design except as regards the dimensions shown.

3RD ANGLE PROJECTION

DIMENSIONS IN MILLIMETRES

STANDARD SHEET 27 (IN PART) RETAINING MEANS FOR 100 A, 160 A AND 200 A PLUGS, SOCKET-OUTLETS, APPLIANCE INLETS AND CONNECTORS

COPYRIGHT

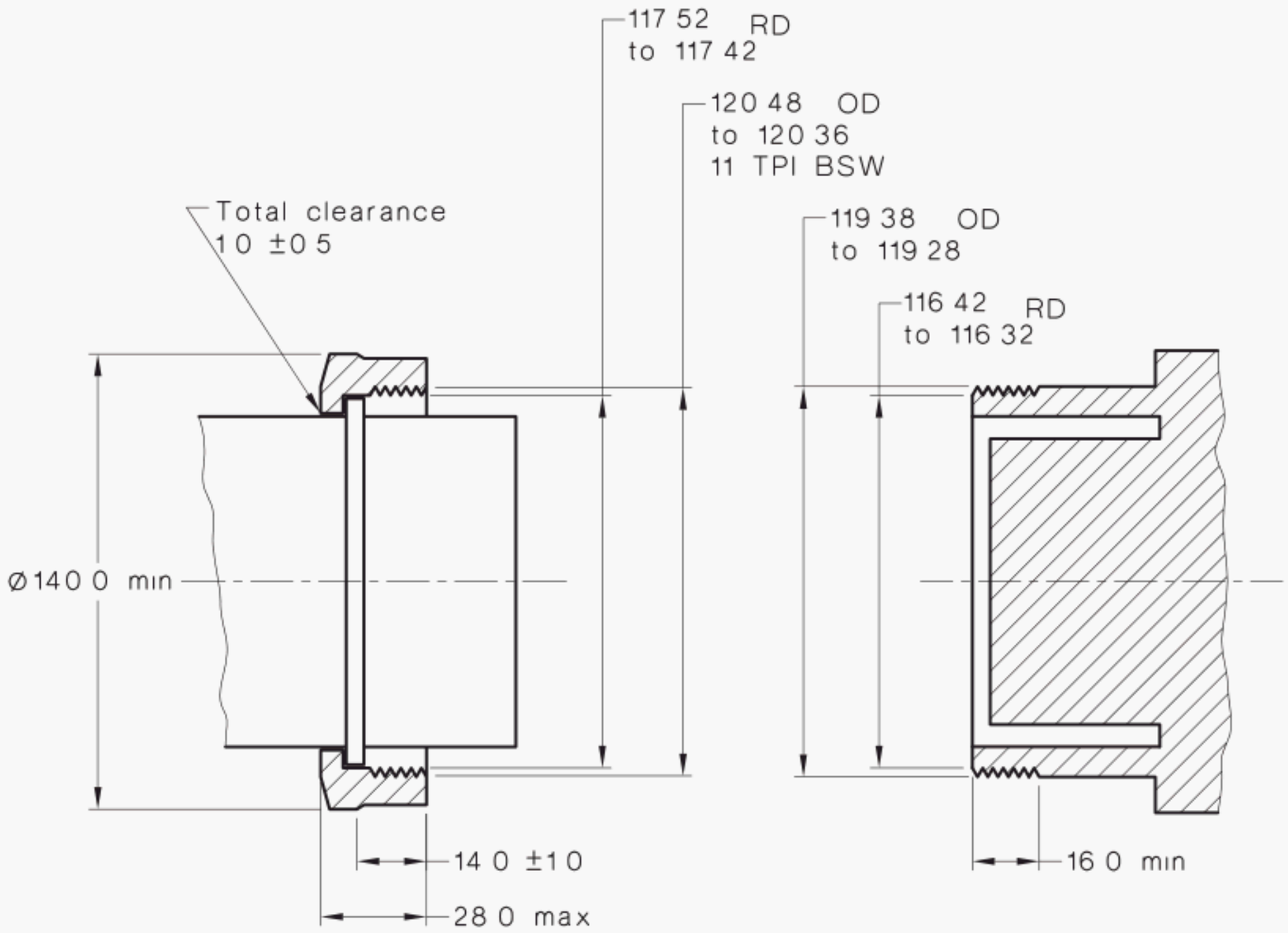

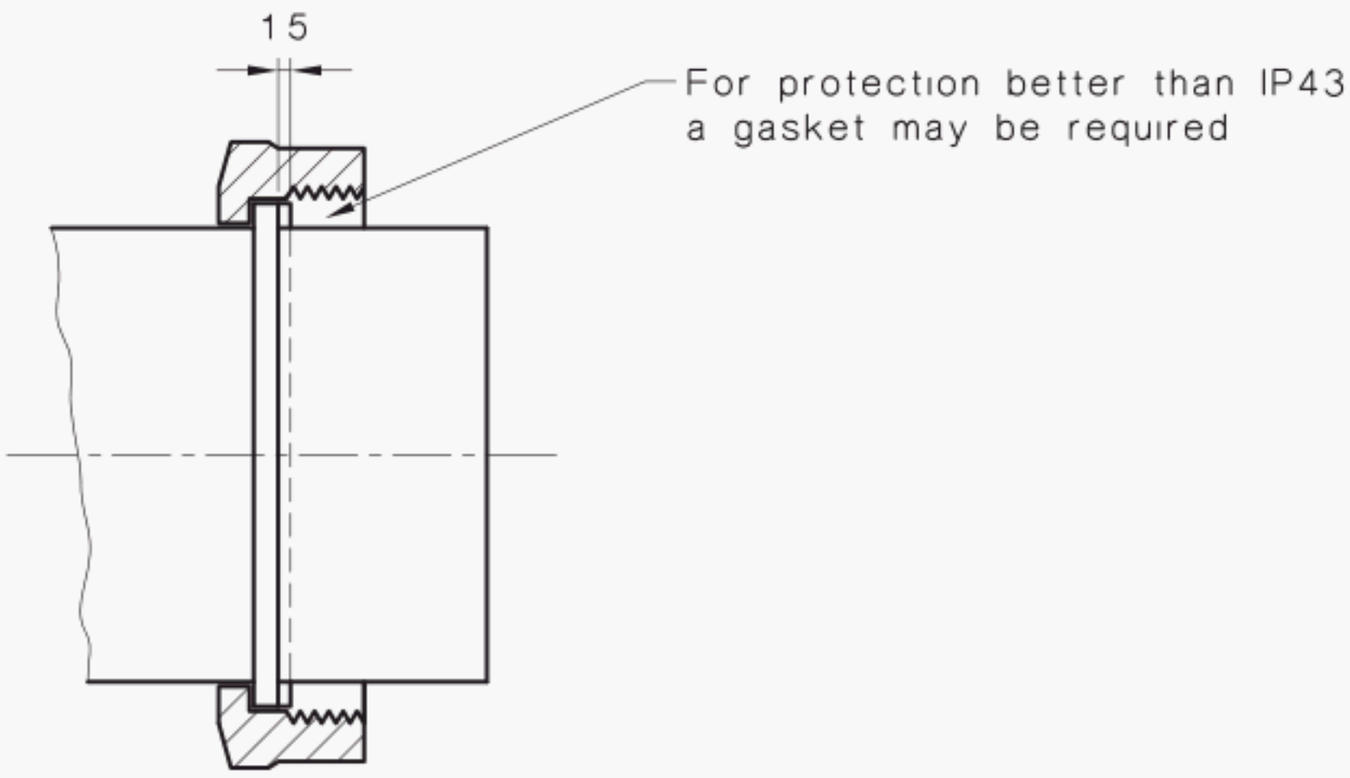

Method B

NOTE: The sketches are not intended to govern design except as regards the dimensions shown.

DIMENSIONS IN MILLIMETRES

STANDARD SHEET 27 (IN PART)
RETAINING MEANS FOR 100 A, 160 A AND 200 A
PLUGS, SOCKET-OUTLETS, APPLIANCE INLETS AND CONNECTORS

COPYRIGHT

NOTES

NOTES

NOTES

Standards Australia

Standards Australia is an independent company, limited by guarantee, which prepares and publishes most of the voluntary technical and commercial standards used in Australia. These standards are developed through an open process of consultation and consensus, in which all interested parties are invited to participate. Through a Memorandum of Understanding with the Commonwealth government, Standards Australia is recognized as Australia's peak national standards body.

Standards New Zealand

The first national Standards organization was created in New Zealand in 1932. The Standards Council of New Zealand is the national authority responsible for the production of Standards. Standards New Zealand is the trading arm of the Standards Council established under the Standards Act 1988.

Australian/New Zealand Standards

Under a Memorandum of Understanding between Standards Australia and Standards New Zealand, Australian/New Zealand Standards are prepared by committees of experts from industry, governments, consumers and other sectors. The requirements or recommendations contained in published Standards are a consensus of the views of representative interests and also take account of comments received from other sources. They reflect the latest scientific and industry experience. Australian/New Zealand Standards are kept under continuous review after publication and are updated regularly to take account of changing technology.

International Involvement

Standards Australia and Standards New Zealand are responsible for ensuring that the Australian and New Zealand viewpoints are considered in the formulation of international Standards and that the latest international experience is incorporated in national and Joint Standards. This role is vital in assisting local industry to compete in international markets. Both organizations are the national members of ISO (the International Organization for Standardization) and IEC (the International Electrotechnical Commission).

Visit our web sites

www.standards.org.au

www.standards.co.nz

www.standards.com.au

STANDARDS AUSTRALIA

GPO Box 5420 Sydney NSW 2001
Administration
Phone (02) 8206 6000
Fax (02) 8206 6001
Email mail@standards.com.au
Customer Service
Phone 1300 65 46 46
Fax 1300 65 49 49
Email sales@standards.com.au
Internet www.standards.org.au

STANDARDS NEW ZEALAND
Paerewa Aotearoa

Level 10 Radio New Zealand House
155 The Terrace Wellington 6001
(Private Bag 2439 Wellington 6020)
Phone (04) 498 5990
Fax (04) 498 5994
Customer Services (04) 498 5991
Information Service (04) 498 5992
Email snz@standards.co.nz
Internet www.standards.co.nz

ISBN 0 7337 6488 6

Printed in Australia

This page has been left intentionally blank.