AS ISO 6302:2021
ISO 6302:1993

Australian STANDARD®

STANDARDS Australia

Earth-moving machinery — Drain, fill and level plugs

This Australian Standard® was prepared by ME-063, Earthmoving Equipment. It was approved on behalf of the Council of Standards Australia on 4 June 2021.

This Standard was published on 18 June 2021.

The following are represented on Committee ME-063:

Australian Industry Group
Better Regulation Division — SafeWork NSW
Construction and Mining Equipment Industry Group
Department of Regional NSW
Department of Resources, Qld
Engineers Australia
Institute of Instrumentation, Control & Automation Australia
Minerals Council of Australia
Mining Electrical and Mining Mechanical Engineering Society
University of Queensland

This Standard was issued in draft form for comment as DR AS ISO 6302:2021.

Keeping Standards up-to-date

Ensure you have the latest versions of our publications and keep up-to-date about Amendments, Rulings, Withdrawals, and new projects by visiting:
www.standards.org.au

ISBN 978 1 76113 399 2

AS ISO 6302:2021
ISO 6302:1993

Earth-moving machinery — Drain, fill and level plugs

First published as AS ISO 6302:2021.

COPYRIGHT

© ISO 2021 — All rights reserved
© Standards Australia Limited 2021

All rights are reserved. No part of this work may be reproduced or copied in any form or by any means, electronic or mechanical, including photocopying, without the written permission of the publisher, unless otherwise permitted under the Copyright Act 1968 (Cth).

Preface

This Standard was prepared by the Standards Australia Committee ME-063, Earthmoving Equipment.

The objective of this document is to establish the types, shapes and sizes of the parts of the plugs used in connection with the hand tools listed in AS ISO 4510.1:2021 to permit easy removal and installation of plugs at the work-site. It does not set requirements, i.e. dimensions and materials, for the manufacture of plugs. This document applies to the drain, fill and level plugs required on earth-moving machines for the changing of lubricants, coolants, hydraulic oils and fuels.

This document is identical with, and has been reproduced from, ISO 6302:1993, *Earth-moving machinery — Drain, fill and level plugs*.

As this document has been reproduced from an International Standard, the following applies:

(a) In the source text "this International Standard" should read "this document".

(b) A full point substitutes for a comma when referring to a decimal marker.

Australian or Australian/New Zealand Standards that are identical adoptions of international normative references may be used interchangeably. Refer to the online catalogue for information on specific Standards.

The terms "normative" and "informative" are used in Standards to define the application of the appendices or annexes to which they apply. A "normative" appendix or annex is an integral part of a Standard, whereas an "informative" appendix or annex is only for information and guidance.

© Standards Australia Limited 2021

Contents

Preface ..... **ii**

Foreword ..... **iv**

1 Scope **1**

2 Normative references **1**

3 Types and principal dimensions **1**

3.1 Types A and B 1

3.2 Types C and D 2

4 Application **3**

Foreword

ISO (the International Organization for Standardization) is a worldwide federation of national standards bodies (ISO member bodies). The work of preparing International Standards is normally carried out through ISO technical committees. Each member body interested in a subject for which a technical committee has been established has the right to be represented on that committee. International organizations, governmental and non-governmental, in liaison with ISO, also take part in the work. ISO collaborates closely with the International Electrotechnical Commission (IEC) on all matters of electrotechnical standardization.

Draft International Standards adopted by the technical committees are circulated to the member bodies for voting. Publication as an International Standard requires approval by at least 75 % of the member bodies casting a vote.

International Standard ISO 6302 was prepared by Technical Committee ISO/TC 127, *Earth-moving machinery*, Subcommittee SC 3, *Operation and maintenance*.

This third edition cancels and replaces the second edition (ISO 6302:1986), of which it constitutes a technical revision.

© Standards Australia Limited 2021

Australian Standard®

Earth-moving machinery — Drain, fill and level plugs

1 Scope

This International Standard establishes the types, shapes and sizes of the parts of the plugs used in connection with the hand tools listed in ISO 4510-1 to permit easy removal and installation of plugs at the work-site. It does not set requirements, i.e. dimensions and materials, for the manufacture of plugs.

This International Standard applies to the drain, fill and level plugs required on earth-moving machines for the changing of lubricants, coolants, hydraulic oils and fuels.

2 Normative references

The following standards contain provisions which, through reference in this text, constitute provisions of this International Standard. At the time of publication, the editions indicated were valid. All standards are subject to revision, and parties to agreements based on this International Standard are encouraged to investigate the possibility of applying the most recent editions of the standards indicated below. Members of IEC and ISO maintain registers of currently valid International Standards.

ISO 7-1:1982, *Pipe threads where pressure-tight joints are made on the threads — Part 1: Designation, dimensions and tolerances.*

ISO 261:1973, *ISO general purpose metric screw threads — General plan.*

ISO 263:1973, *ISO inch screw threads — General plan and selection for screws, bolts and nuts — Diameter range 0.06 to 6 in.*

ISO 724:1993, *ISO general-purpose metric screw threads — Basic dimensions.*

ISO 725:1978, *ISO inch screw threads — Basic dimensions.*

ISO 4510-1:1987, *Earth-moving machinery — Service tools — Part 1: Common maintenance and adjustment tools.*

3 Types and principal dimensions

3.1 Types A and B

Plugs of types A and B shall be as shown in figure 1 and table 1.

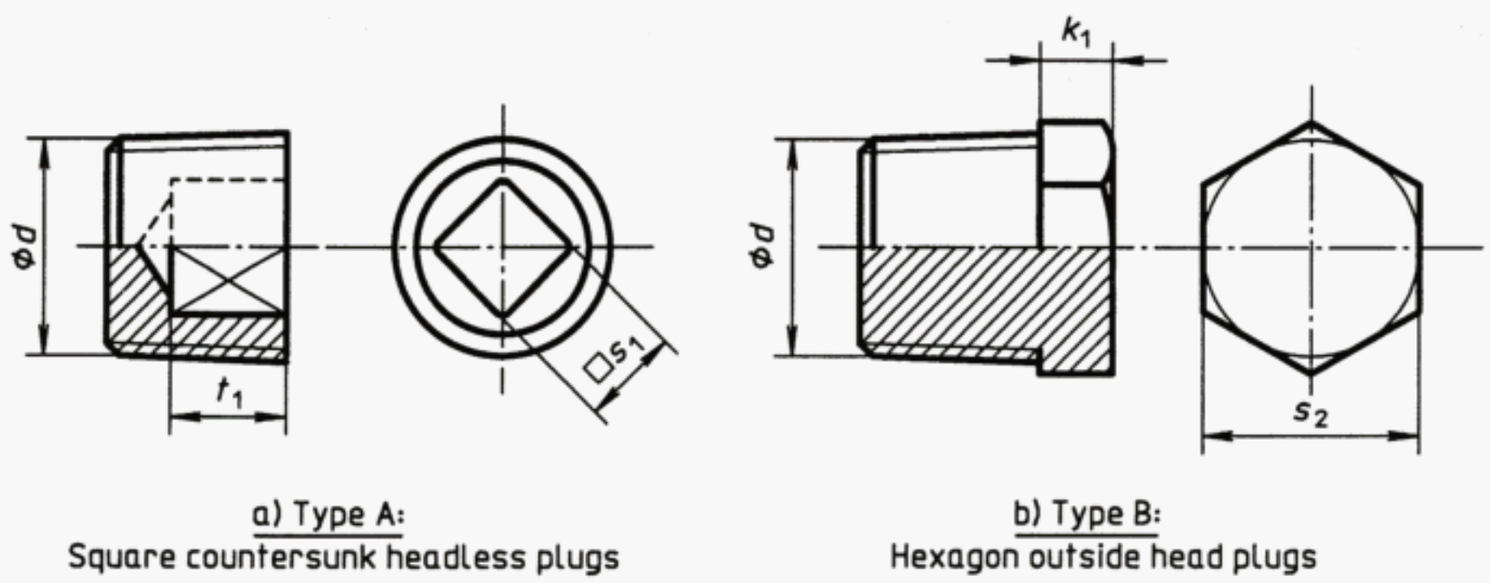

Figure 1

© Standards Australia Limited 2021

Table 1

Taper pipe thread[1] (ISO 7-1) d	Type A		Type B	
	Socket width[2]	Socket depth	Head width[2]	Head height
		min.		nom.
	s_1	t_1	s_2	k_1
R 1/8 (1/8-27 NPTF)			12 (7/16)	5 (3/16)
R 1/4 (1/4-18 NPTF)			14 (9/16)	5 (3/16)
R 3/8 (3/8-18 NPTF)			19 (11/16)	6 (7/32)
R 1/2 (1/2-14 NPTF)			22 (7/8)	6 (7/32)
R 3/4 (3/4-14 NPTF)	12,5 (1/2)	8 (5/16)	27 (1 1/8)	8 (5/16)
R 1 (1-11 1/2 NPTF)	12,5 (1/2)	10 (3/8)	36 (1 5/16)	8 (5/16)
R 1 1/4 (1 1/4-11 1/2 NPTF)	20 (3/4)	12 (1/2)	46 (1 7/8)	10 (3/8)
R 1 1/2 (1 1/2-11 1/2 NPTF)	20 (3/4)	12 (1/2)	50 (1 7/8)	10 (3/8)
Corresponding hand tools (ISO 4510-1)	Handles, socket wrench		Combination or engineer's wrench	

1) See also ANSI B1.20.3-1976 (SAE J476) (R1991), *Dryseal pipe threads* (inch).

2) The figures given are nominal tool sizes and not plug dimensions.

3.2 Types C and D

Plugs of types C and D shall be as shown in figure 2 and table 2.

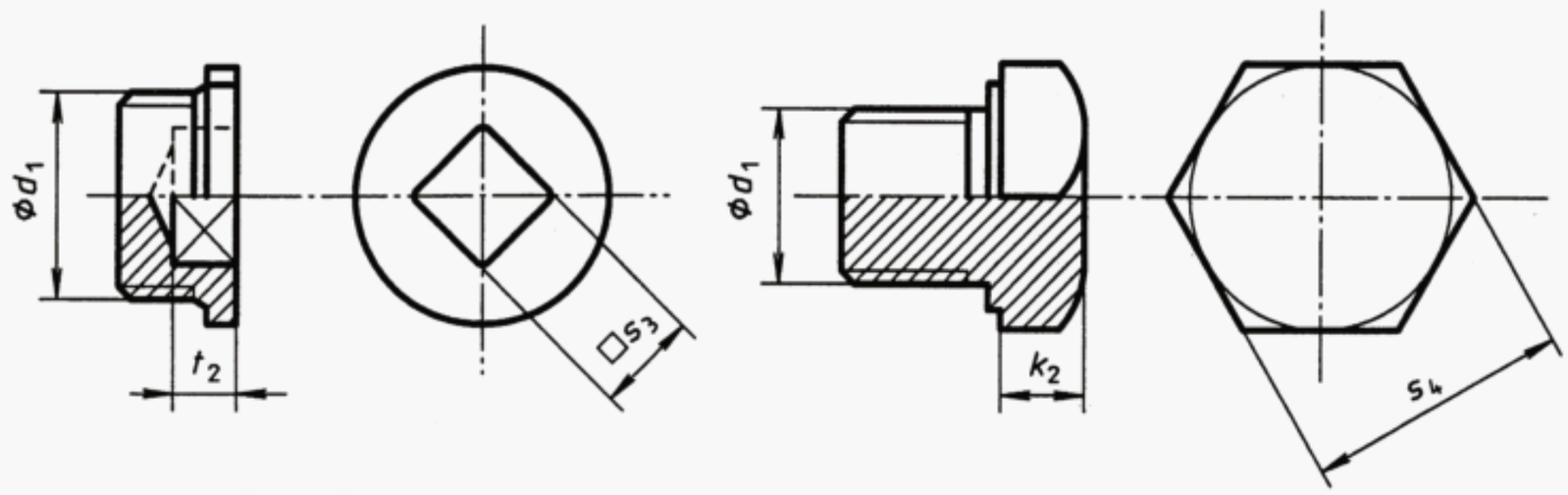

a) Type C:
Square socket head plugs

b) Type D:
Hexagon outside head plugs

Figure 2

© Standards Australia Limited 2021

Table 2

Thread (ISO 261, ISO 724) (ISO 263, ISO 725) d_1	Type C		Type D[1)]	
	Socket width[2)]	**Socket depth**	**Head width**[2)]	**Head height**
		min.		nom.
	s_3	t_2	s_4	k_2
M8 × 1 (5/16-24 UNF)			13 (9/16)	5 (3/16)
M10 × 1,25 (3/8-24 UNF)			17 (5/8)	5 (3/16)
M12 × 1,25 (1/2-20 UNF)			19 (3/4)	5 (3/16)
M16 × 1,5 (5/8-18 UNF)			24 (7/8)	7 (1/4)
M20 × 1,5 (3/4-16 UNF)			30 (1 1/8)	7 (1/4)
M24 × 1,5 (1-12 UNF)	12,5 (1/2)	8 (5/16)	32 (1 5/16)	7 (1/4)
M27 × 1,5 (1 1/16-12 UN)			32 (1 5/16)	8 (5/16)
M30 × 1,5 (1 1/4-12 UNF)	20 (3/4)	12 (1/2)	41 (1 1/2)	8 (5/16)
M33 × 1,5 (1 5/16-12 UN)			41 (1 1/2)	10 (3/8)
M36 × 1,5 (1 1/2-12 UNF)	20 (3/4)	12 (1/2)	46 (1 7/8)	10 (3/8)
(1 5/8-12 UN)			(1 7/8)	(3/8)
M42 × 1,5 (1 3/4-12 UN)	20 (3/4)	12 (1/2)	55 (2 1/16)	10 (3/8)
(1 7/8-12 UN)			(2 1/4)	(3/8)
M48 × 1,5 (2-12 UN)	20 (3/4)	12 (1/2)	60 (2 1/4)	10 (3/8)
Corresponding hand tools (ISO 4510-1)	Handles, socket wrench		Combination or engineer's wrench	

1) Some sizes of type D are compatible with standard hose and tube fitting threads: they are included in ISO 725 and ISO 263 for inch screw threads and allow a hose to be attached so that the drainage may be collected.

2) The figures given are nominal tool sizes and not plug dimensions.

4 Application

Table 3 indicates the recommended use of plug types A, B, C and D.

Table 3

Application	Recommended plug type
Where physical damage is likely	A, C (C preferred)
Where there are clearance problems	A, C (C preferred)
Where periodic removal and reassembly is expected	D
Where minimum removal and reassembly is expected	B

© Standards Australia Limited 2021

NOTES

Standards Australia
Standards Australia develops Australian Standards® and other documents of public benefit and national interest. These Standards are developed through an open process of consultation and consensus, in which all interested parties are invited to participate. Through a Memorandum of Understanding with the Commonwealth Government, Standards Australia is recognized as Australia's peak non-government national standards body.

For further information visit www.standards.org.au

Australian Standards®
Committees of experts from industry, governments, consumers and other relevant sectors prepare Australian Standards. The requirements or recommendations contained in published Standards are a consensus of the views of representative interests and also take account of comments received from other sources. They reflect the latest scientific and industry experience. Australian Standards are kept under continuous review after publication and are updated regularly to take account of changing technology.

International Involvement
Standards Australia is responsible for ensuring the Australian viewpoint is considered in the formulation of International Standards and that the latest international experience is incorporated in national Standards. This role is vital in assisting local industry to compete in international markets. Standards Australia represents Australia at both the International Organization for Standardization (ISO) and the International Electrotechnical Commission (IEC).

GPO Box 476 Sydney NSW 2001
Phone (02) 9237 6000
mail@standards.org.au
www.standards.org.au

Printed in Australia

ISBN 978 1 76113 399 2