Methods for Testing of Solid and Rigid Centralizers

API TECHNICAL REPORT 10TR5
FIRST EDITION, MAY 2008

Methods for Testing of Solid and Rigid Centralizers

Upstream Department

API TECHNICAL REPORT 10TR5
FIRST EDITION, MAY 2008

Special Notes

API publications necessarily address problems of a general nature. With respect to particular circumstances, local, state, and federal laws and regulations should be reviewed.

Neither API nor any of API's employees, subcontractors, consultants, committees, or other assignees make any warranty or representation, either express or implied, with respect to the accuracy, completeness, or usefulness of the information contained herein, or assume any liability or responsibility for any use, or the results of such use, of any information or process disclosed in this publication. Neither API nor any of API's employees, subcontractors, consultants, or other assignees represent that use of this publication would not infringe upon privately owned rights.

API publications may be used by anyone desiring to do so. Every effort has been made by the Institute to assure the accuracy and reliability of the data contained in them; however, the Institute makes no representation, warranty, or guarantee in connection with this publication and hereby expressly disclaims any liability or responsibility for loss or damage resulting from its use or for the violation of any authorities having jurisdiction with which this publication may conflict.

API publications are published to facilitate the broad availability of proven, sound engineering and operating practices. These publications are not intended to obviate the need for applying sound engineering judgment regarding when and where these publications should be utilized. The formulation and publication of API publications is not intended in any way to inhibit anyone from using any other practices.

Any manufacturer marking equipment or materials in conformance with the marking requirements of an API standard is solely responsible for complying with all the applicable requirements of that standard. API does not represent, warrant, or guarantee that such products do in fact conform to the applicable API standard.

All rights reserved. No part of this work may be reproduced, stored in a retrieval system, or transmitted by any means, electronic, mechanical, photocopying, recording, or otherwise, without prior written permission from the publisher. Contact the Publisher, API Publishing Services, 1220 L Street, N.W., Washington, D.C. 20005.

Copyright © 2008 American Petroleum Institute

Foreword

Nothing contained in any API publication is to be construed as granting any right, by implication or otherwise, for the manufacture, sale, or use of any method, apparatus, or product covered by letters patent. Neither should anything contained in the publication be construed as insuring anyone against liability for infringement of letters patent.

Suggested revisions are invited and should be submitted to the Standards Department, API, 1220 L Street, NW, Washington, D.C. 20005, standards@api.org.

Contents

Page

1 Introduction . . . 1

2 Description of Rigid and Solid Centralizers . . . 1
2.1 Rigid Centralizer . . . 1
2.2 Semi-rigid Centralizer . . . 1
2.3 Solid Centralizer . . . 2

3 Solid and Rigid Centralizer Testing Methods . . . 2

4 Measurement of Friction Factor Using Pin-on-Disk Method . . . 2
4.1 Test Apparatus and Description of the Test . . . 2
4.2 Test Parameters . . . 3
4.3 Example Test Parameters . . . 4
4.4 Calculating the Friction Factor . . . 4

5 Measurement of Wear Using the Pin-on-Disk Method . . . 5
5.1 Test Description . . . 5
5.2 Example Test Parameters . . . 5

6 Impact Test Consisting of Dynamic Loading Applicable to Hinged-type Rigid Centralizers . . . 6
6.1 Test Apparatus and Description of the Test . . . 6
6.2 Significant Test Parameters . . . 6
6.3 Recommended Test Parameters for Different Size Centralizers . . . 6

7 Static Axial Loading Simulating Running the Centralizer Through Restrictions . . . 10
7.1 Test Apparatus and Description of the Tests . . . 10
7.2 Testing the Centralizer Through the Recommended Hole Diameter . . . 10
7.3 Total Circumferential Loading Test (Rigid Centralizer Only) . . . 10
7.4 Partial Circumferential Loading Test (Rigid Centralizer Only) . . . 11
7.5 Reporting of Test Results . . . 11

8 Test to Simulate Side Loading of the Centralizer . . . 14
8.1 Test Apparatus . . . 14
8.2 Test Procedure . . . 15

9 Test to Simulate Static Loading of Centralizer and Stop Collar . . . 15
9.1 Test Apparatus . . . 15
9.2 Test Procedure . . . 15

10 Pull-apart Test for Centralizers with End Rings . . . 16

Figures

1 Example of Rigid Centralizer . . . 1
2 Example of Semi-rigid Centralizer . . . 2
3 Pin-on-Disk Test Device . . . 5
4 Typical Test Apparatus Used to Apply a Dynamic Load to the End Rings of a Hinged Rigid Centralizer . . . 7
5 Installation of Centralizer in the Test Apparatus . . . 8
6 Weight Being Raised a Preset Distance Before Being Dropped . . . 9
7 Typical Test Set-up with a Rigid Centralizer Being Forced into a Smooth Bore Diameter . . . 12
8 Typical Test Set-up with a Rigid Centralizer Being Forced into a Bore with a Full Circumferential Restriction . . . 13
9 Components That Make Up the Partial Bore Test Fixture . . . 13

Page

10 Typical Test Set-up with a Rigid Centralizer Being Forced into a Bore with a 90° Partial Restriction . . 14
11 Side Loading Testing of Centralizers 15
12 Centralizer on a Test Mandrel with a Limit Clamp or Stop Collar 16

Tables

1 Example Test Parameters 4
2 Example Test Parameters 5
3 Recommended Test Parameters for Different Size Centralizers 6

Methods for Testing of Solid and Rigid Centralizers

1 Introduction

Solid and rigid centralizers have been used by the petroleum industry for many years to assist with running casing to the bottom of the wellbore and with improving mud displacement. The purpose of this document is to provide the industry with methods for testing rigid and solid centralizers.

The API and ISO standardization committees have produced specifications, testing, and recommended practices for the use of bow-type centralizers, but to date, the petroleum industry does not have standards for the selection and use of solid or rigid centralizers, even though those devices are widely used. Additionally, the industry does not have standardized testing methods to verify functionality and reliability of centralizers. This is a problem for the operator in making an intelligent selection for centralizers to use in the well. Some testing procedures are available, but because they are not standardized, they tend to hinder communication between manufacturers and end users.

2 Description of Rigid and Solid Centralizers

2.1 Rigid Centralizer

This centralizer is composed of rigid, non-flexible bands or bars fixed to two end collars. These devices have a smaller outside diameter (OD) than the casing or hole through which the centralizers are run and, therefore, generate zero starting forces. Because these devices do not have a solid body, they are capable of experiencing deformation when run through restrictions.

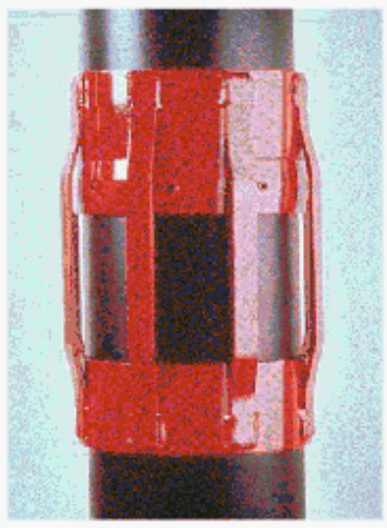

Figure 1—Example of Rigid Centralizer

2.2 Semi-rigid Centralizer

This centralizer is a subclass of the rigid centralizer category. This device is composed of flexible spring bows attached to two end collars, but the springs are manufactured such that they form two equal-length bows between the end rings. These double-bow springs flex under load, but under large loads become essentially rigid.

Figure 2—Example of Semi-rigid Centralizer

2.3 Solid Centralizer

This centralizer is manufactured with rigid, non-flexible blades or bands. The centralizers have solid bodies and solid blades. The blades are either formed during molding of the centralizer or welded on the solid body. These devices have a smaller OD than the casing or hole where the centralizers will be used, and, therefore, generate zero starting forces. Because these devices have a solid body, they do not experience deformation when run through restrictions; they do not flex.

3 Solid and Rigid Centralizer Testing Methods

The following measurement and test procedures are included in this document:

1. measurement of friction factor using the pin-on-disk method (Section 4);
2. measurement of wear using the pin-on-disk method (Section 5);
3. impact test consisting of dynamic loading applicable to hinge-type rigid centralizers (Section 6);
4. static axial loading to simulate running through restrictions (Section 7);
5. test to simulate side loading of the centralizer (Section 8);
6. test to simulate static loading of the centralizer and stop collar (Section 9);
7. pull-apart test for rigid centralizers with end rings (Section 10).

The user is encouraged to select the applicable measurements and tests for solid or rigid centralizers appropriate for specific well conditions.

4 Measurement of Friction Factor Using the Pin-on-Disk Method

4.1 Test Apparatus and Description of the Test

The friction factor of centralizer construction materials can be measured in the presence of different mud systems using the “pin-on-disk” device and method (see Figure 3). For the results to be relevant, materials being tested should match the composition of the construction materials used to manufacture the centralizers. The device is composed of a stationary base element (pin) on which the test specimen is mounted and a rotating disk. The specimen to be tested and the disk are pressed together using a calculated force corresponding to the anticipated force on the centralizer. The sliding velocity and the pressing force can be adjusted and controlled over wide ranges. The area of the disk contacted by the specimen is continuously sprayed with the mud being used during the test. When measuring friction factors using different mud systems or different centralizer materials, the geometry and test

conditions for all tests must be identical. During the tests, the amount of fluid flow must be regulated to ensure the surfaces of the disk and the specimen are always covered with the fluid.

Table 1, Section 4.3 lists examples of parameters used to conduct a test and is not a specific recommendation. In addition to the composition of the materials used in the test, other important parameters to consider include: velocity, pressure, temperature and rotating time. Friction factor results from this test are not usable in the field. Many other parameters and conditions affect actual field-obtained friction factors; however, results from this test method may be used to compare different centralizer materials and drilling fluids under “identical” test conditions.

4.2 Test Parameters

4.2.1 Material Composition

Composition of the materials used to simulate the centralizer (specimen) and the formation or the casing (rotating disk) will affect test results. Therefore, the specimen material must match that of the centralizer being tested. The disk material should simulate the casing or formation being considered. The materials must be kept consistent within a test series to allow data comparison.

4.2.2 Disk Speed or Sliding Velocity

The disk speed will affect the friction observed during the test. The velocity should match that found in field conditions when running casing. If it is assumed the running speed for the casing is one joint per minute, then disk speeds of 30 ft/min to 40 ft/min would be appropriate. Velocity will be affected by the disk diameter and the location of the specimen on the disk.

4.2.3 Normal Force

The loading force of the specimen on the disk must be consistent within a series of tests. The normal force is a critical test parameter must be calculated to correspond to forces on the centralizer while being run and must be carefully controlled.

4.2.4 Specimen Geometry

For comparative purposes, the geometry of the specimen must be carefully controlled. A change in the specimen geometry will affect the contact area and the result of the test.

4.2.5 Temperature and Fluid Lubrication

Consistent fluid lubrication of the sample during the test and consistent fluid temperatures should be controlled. Fluid lubricity can change with temperature and will affect the result of the test.

4.3 Example Test Parameters

Table 1 provides an example of parameters used in a test.

Table 1—Example Test Parameters

Parameter	Value
Rotating disc material	Steel, surface not polished to simulate the casing, compacted, well-consolidated sandstone to simulate a sandstone formation, etc.
Disc diameter	65 mm (2.56 in.)
Geometry of specimen	3 mm x 8 mm (0.118 in. x 0.315 in.), plane surface
Composition of specimen	Centralizer material
Sliding velocity	0.15 m/s (29.5 ft/min)
Normal pressure	5 N/mm^2 (727 lbf/in.^{2})
Temperature	20 °C (68 °F)
Rotating time	Until reaching steady state

4.4 Calculating the Friction Factor

The friction factor at any time is calculated using the following equation:

$$f = F / (P \times A) \tag{1}$$

where

f is the friction factor;
F is the friction force exerted by the rotating motor (psi);
P is the pressure applied to the pin (psi);
A is the area of contact—specimen to disk (in.^{2}).

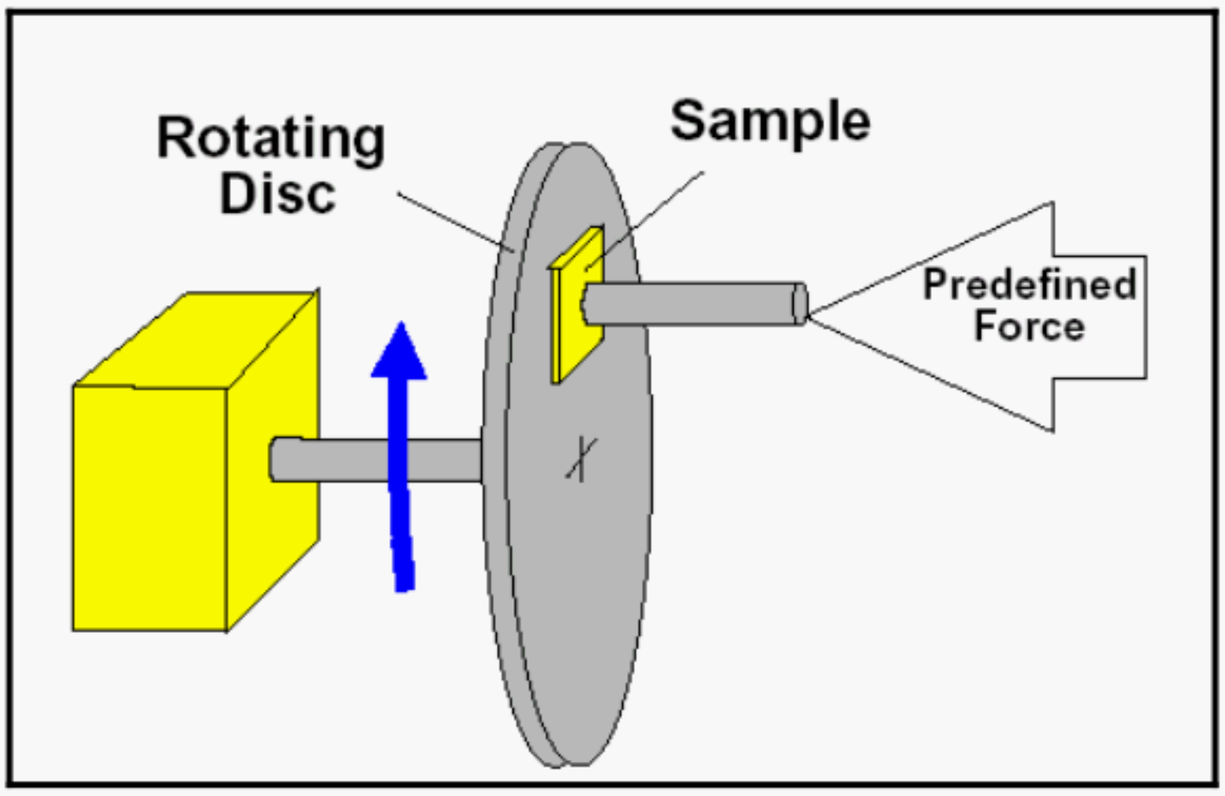

Figure 3—Pin-on-Disk test device

5 Measurement of Wear Using the Pin-on-Disk Method

5.1 Test Description

The same "pin-on-disk" test device shown in Figure 3 can be used to measure wear under pre-selected test conditions. For example, a steel disk may be used to measure wear of the centralizer material inside previously set casing. A disk made from compacted, well-consolidated sandstone may be used to simulate the abrasive behavior of a sandstone formation. As for the friction factor tests, the contacted surfaces must be continuously sprayed with the drilling fluid being used. The predefined force must be calculated to correspond to forces on the centralizer while being run and must be carefully controlled. An example of a set of test conditions is given in Table 2.

5.2 Example Test Parameters

Table 2—Example Test Parameters

Parameter	Value
Disc diameter	65 mm (2.56 in.)
Geometry of specimen	3 mm x 8 mm (0.118 in. x 0.315 in.), plane surface
Composition of specimen	Centralizer material
Sliding velocity	0.15 m/s (29.5 ft/min)
Normal pressure	1.39 N/mm^2 (8.45 lbf/in.^{2})
Temperature	20 °C (68 °F)
Rotating time	45 minutes
Rotating disc material	Compact sandstone

6 Impact Test Consisting of Dynamic Loading Applicable to Hinged-type Rigid Centralizers

6.1 Test Apparatus and Description of the Test

This is considered a very severe test, and can be used to differentiate various designs. The test device (see Figure 4) applies a predetermined dynamic load to the end rings of a hinged-type rigid centralizer. The upper-end ring retainer, or clamp, which supports the upper collar of the centralizer, is part of the main structure. A second end ring retainer is located on the lower end of the traveling shaft used to apply the dynamic load. This lower clamp supports the lower collar of the centralizer being tested. The dynamic load is applied by dropping a traveling fixed weight a predetermined distance. The resulting load is absorbed by the two end collars of the centralizer being tested. The holding ability of the centralizer design under dynamic loading conditions can be determined using successive dynamic impacts.

6.2 Significant Test Parameters

6.2.1 Size of the Pre-selected Dynamic Load

As the weight is increased, the dynamic load on the centralizer increases. A weight of approximately 1,500 lbm is recommended.

6.2.2 Drop Distance for the Weight

The drop distance will also affect the results and should be consistent across all the comparison tests. A distance no greater than two (2) feet is recommended.

6.2.3 Number of Dynamic Impacts

The recommended maximum number of impacts is twenty (20). However in some cases, the user may apply repeated impacts to cause failure of the centralizer.

6.3 Recommended Test Parameters for Different Size Centralizers

Table 3—Recommended Test Parameters for Different Size Centralizers

Centralizer Size	Weight (lbm)	Drop Distance (in.)	Maximum Number of Impacts
7 in. and smaller	1,500	8	20
7 5/8 in. and larger	1,500	12	20

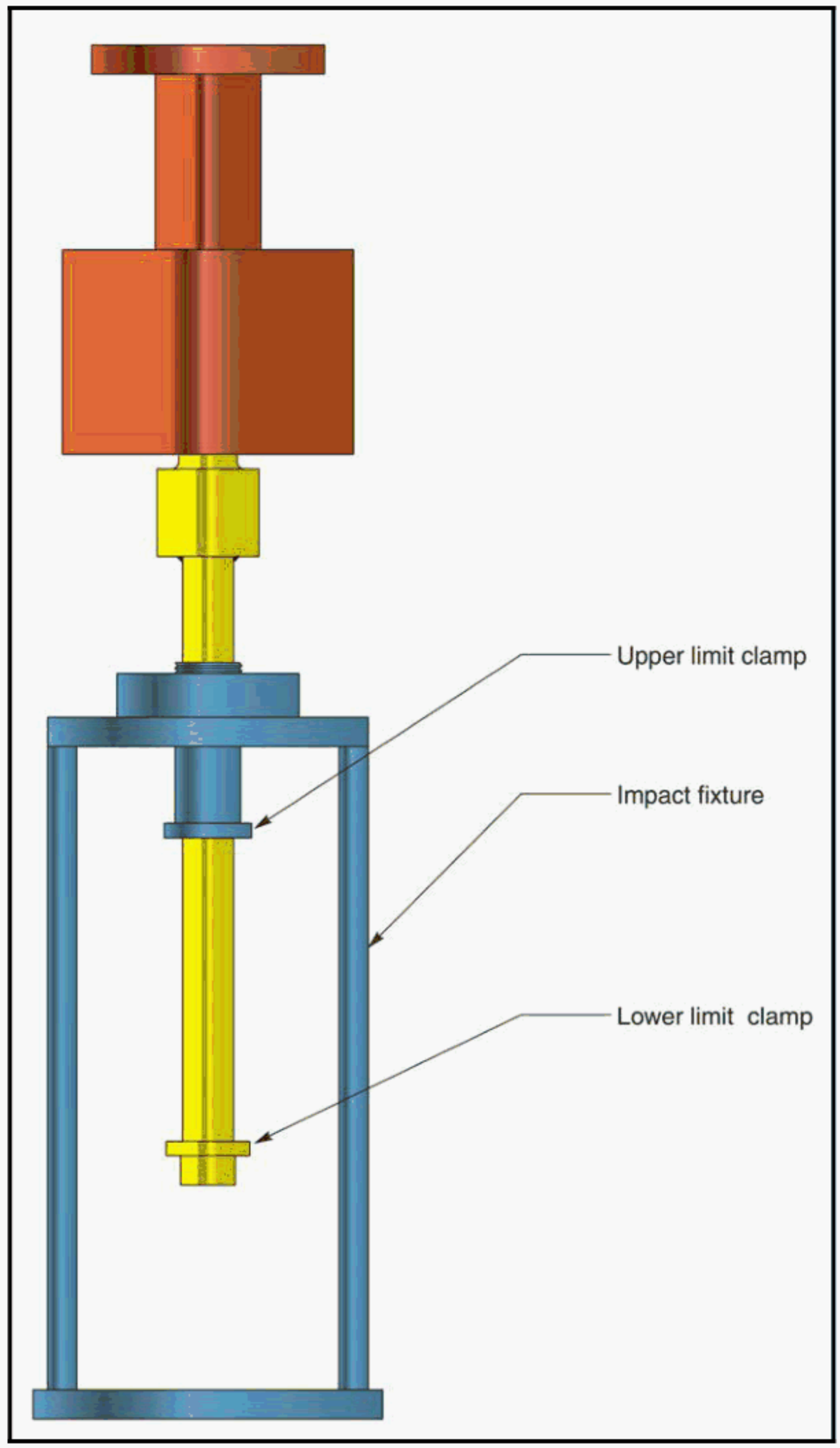

Figure 4—Typical Test Apparatus Used to Apply a Dynamic Load to the End Rings of a Hinged Rigid Centralizer

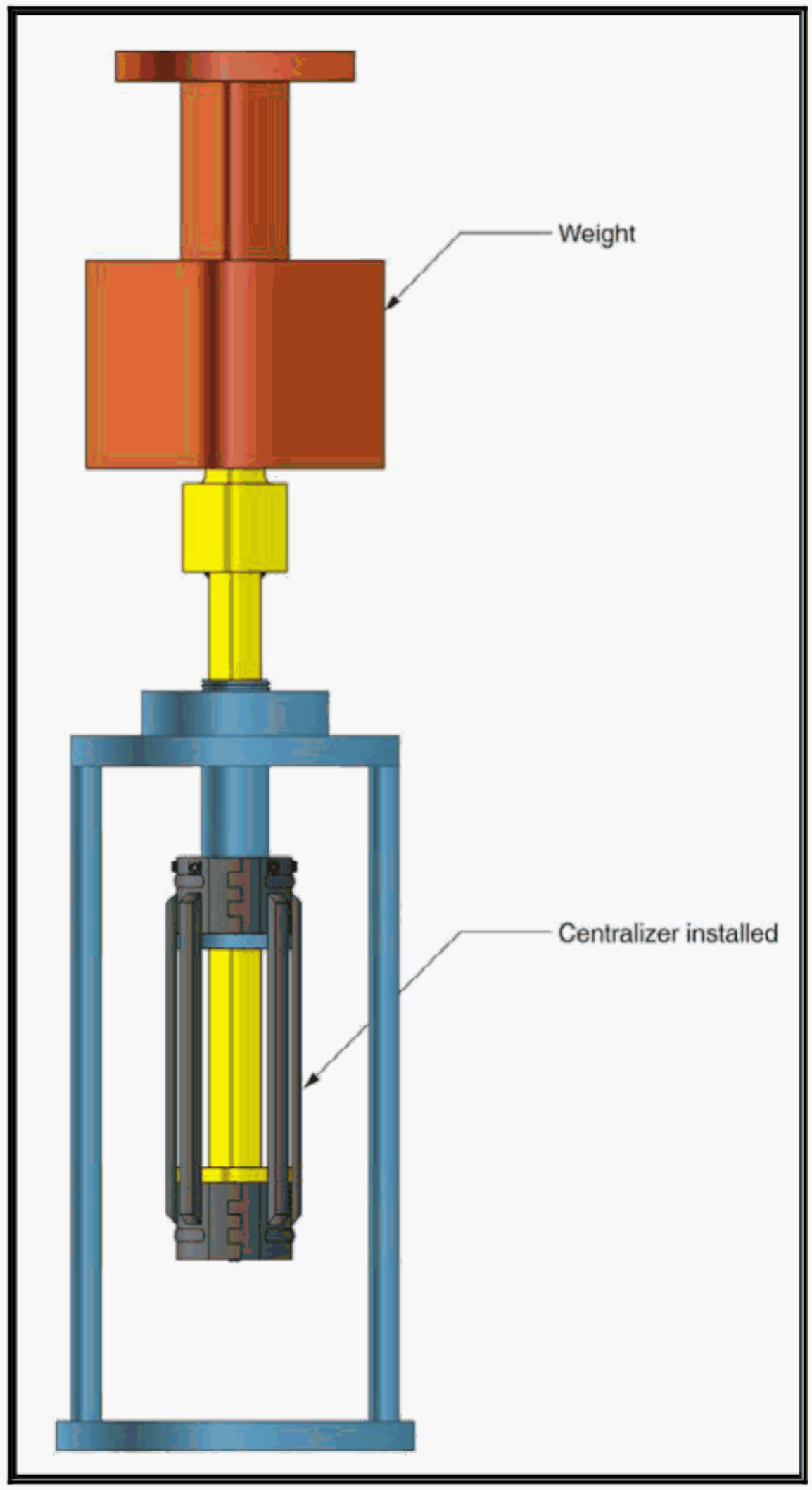

Figure 5—Installation of Centralizer in the Test Apparatus

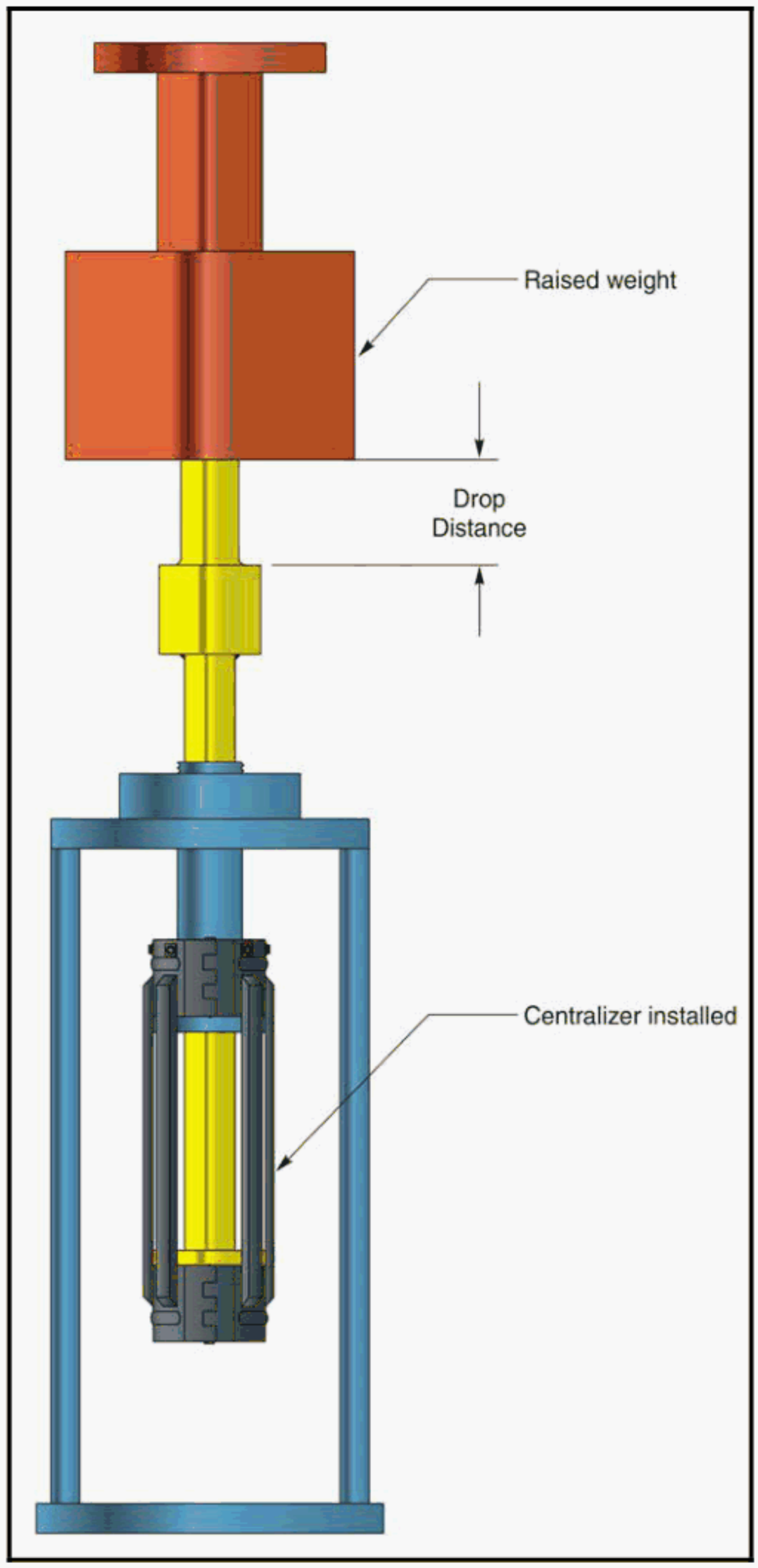

Figure 6—Weight Being Raised a Preset Distance Before Being Dropped

7 Static Axial Loading Simulating Running the Centralizer Through Restrictions

7.1 Test Apparatus and Description of the Tests

Although operators plan to drill wellbores to gauge dimensions, there are many factors and circumstances, such as use of bi-center bits, worn bits, and swelling formations that can lead to running casing and casing hardware (centralizers, stop collars, etc.) through tortuous wellbores, under gauge hole sections, ledges, and keyseats. Testing is recommended to determine the effects of running centralizers through these restrictions.

7.1.1 Test Instrumentation

The instrumentation should be capable of accurately recording or otherwise indicating the application of vertical loads, including the maximum load applied during the test, as well as the load at initiation of possible damage and/or failure of the centralizer, and if the safe limit of the testing device is reached (maximum allowed load level).

7.2 Testing the Centralizer Through the Recommended Hole Diameter

In this test the centralizer is run through the recommended (design) wellbore diameter to verify that the OD of the entire centralizer is as specified by the manufacturer.

The test assembly (see Figure 7) consists of an inner test casing (push mandrel) with an attached centralizer and a restriction sleeve (standard hole). The inner test casing should be similar to the inner test casing used to perform a starting or running force test as required by API Spec 10D (ISO 10427-1). The inner test casing for the restriction tests described in this section must be sufficiently robust to withstand expected loads. The restriction sleeve should be within the tolerances indicated in ISO 11960 for non-upset pipe. Burrs or similar defects should be removed prior to testing. The restriction sleeve should provide a circular restriction through which the centralizer may pass. The upper edge of the restriction should have a 45-degree, beveled end. The restriction sleeve should also be of sufficient length to allow passage of the entire length of the centralizer through the restriction. The restriction sleeve should rest, vertically or horizontally, against a fixed surface.

The centralizer should be installed on the inner test casing per manufacturer's recommendations. One possible installation is one end of the centralizer mounted flush with one end of the inner casing. Another installation uses a stop device between the end collars. This end is inserted in the restriction sleeve. The restriction sleeve should be axially aligned with the centralizer to contact the centralizer.

An axial load shall be applied to the top of the inner test casing to force the centralizer against or through the restriction sleeve while recording the load applied. Suggested load rate should be 500 lbf to 1,000 lbf per second. The test should be continued until the centralizer fails, is completely inside the restriction, or a maximum load of 50,000 lbf has been applied.

7.3 Total Circumferential Loading Test (Rigid Centralizer Only)

This test simulates the effect of running rigid centralizers through an under gauge hole section. The centralizer is pushed through a circular restriction smaller than the OD of the centralizer. The test assembly (Figure 8) consists of an inner test casing (push mandrel) with an attached centralizer and a restriction sleeve configured as follows:

- an upper section with a diameter of the standard hole;
- a transition with a 45-degree bevel into the lower section;
- a lower with a recommended restriction diameter which is 0.50-in. smaller than the maximum OD of the centralizer full bore restriction diameter.

The inner test casing should be similar to the inner test casing used to perform a starting or running force test as required by API Spec 10D (ISO 10427-1). The restriction sleeve should be within the tolerances indicated in

ISO 11960 for non-upset pipe. Burrs or similar defects should be removed prior to testing. The restriction sleeve should also be of sufficient length to allow passage of the entire length of the centralizer through the restriction.

An axial load shall be applied to the top of the inner test casing to force the centralizer against or through the restriction sleeve while recording the load applied. Suggested load rate should be 500 lbf to 1,000 lbf per second. The test should be continued until the centralizer fails, is completely inside the restriction, or a maximum load of 50,000 lbf has been applied.

7.4 Partial Circumferential Loading Test (Rigid Centralizer Only)

The purpose of this test is to simulate the effect of running rigid centralizers through a key-seat or past a ledge. The centralizer is pushed through a partial circular restriction smaller than the OD of the centralizer. The test assembly is configured with an internal circumferential partial bore restriction (see Figure 9). A typical test set-up is shown in Figure 10.

The restriction sleeve should be within the tolerances indicated in ISO 11960 for non-upset pipe. Burrs or similar defects should be removed prior to testing. The restriction sleeve should also be of sufficient length to allow passage of the entire length of the centralizer through the restriction. The circumferential angle of the restriction is selected by the user. Suggested angles are 90 or 45 degrees of the inner circumference of the outer casing.

An axial load shall be applied to the top of the inner test casing to force the centralizer against or through the restriction sleeve while recording the load applied. Suggested load rate should be 500 to 1,000 lbf per second. The test should be continued until the centralizer fails, is completely inside the restriction, or a maximum load of 50,000 lbf has been applied.

7.5 Reporting of Test Results

The following information should be reported:

1. size, weight, grade, and type of surface finish of the inner test casing;
2. measured length, internal diameter and OD of the outer test casing, restriction sleeve, and centralizer before testing;
3. description of restriction and type of test, total circumferential or partial circumferential loading;
4. loading rate and loading technique;
5. load at which permanent deformation or failure initially occurred;
6. maximum load needed to push the centralizer into the restriction;
7. photos and description of the condition of the centralizer following the test, noting any damage and dimensional changes of the centralizer and other test fixtures;
8. centralizer manufacturer, model number, nominal size, number, type, location of attachments to the push mandrel and installation torque on attachment device (if applicable).

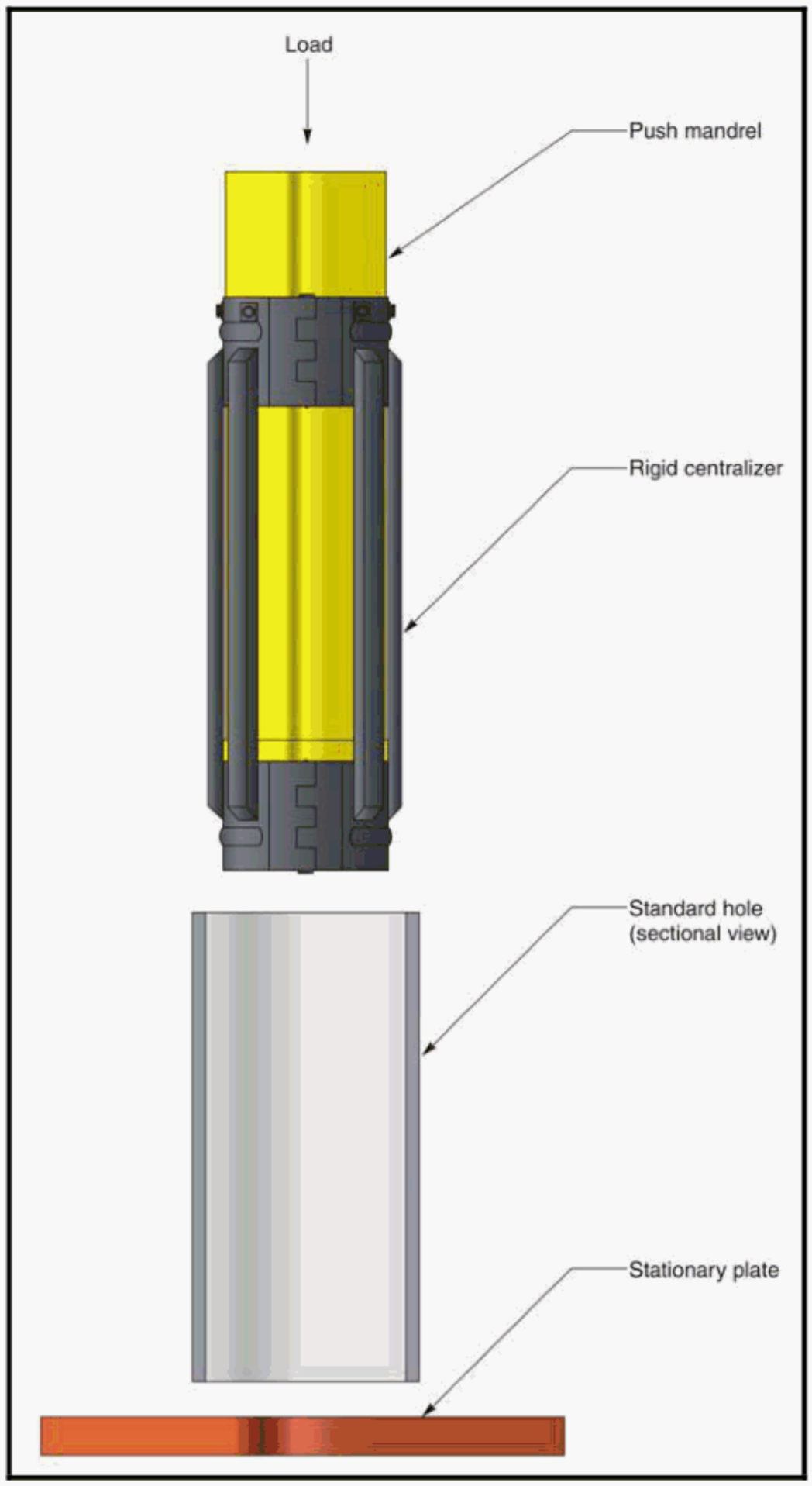

Figure 7—Typical Test Set-up with a Rigid Centralizer Being Forced into a Smooth Bore Diameter

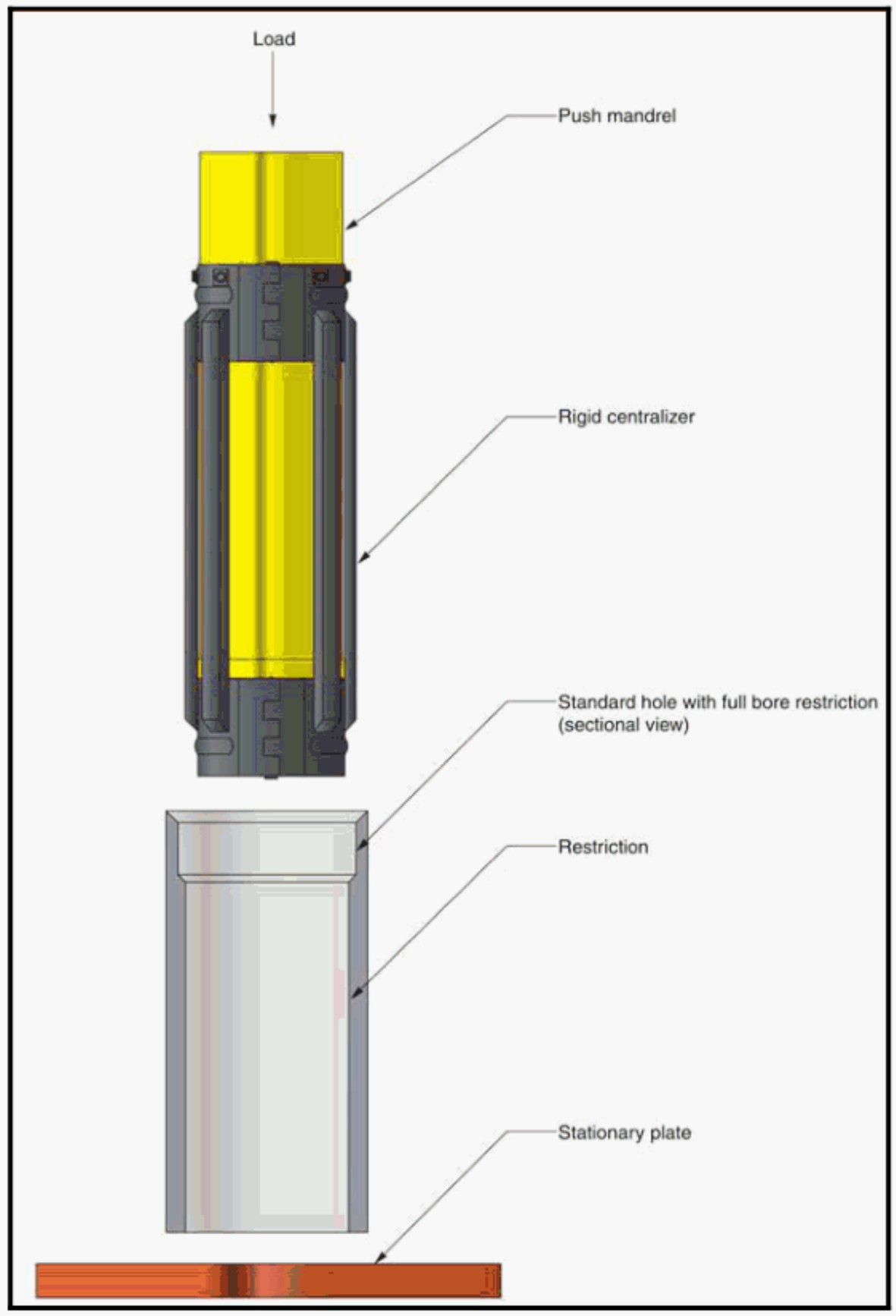

Figure 8—Typical Test Set-up with a Rigid Centralizer Being Forced into a Bore with a Full Circumferential Restriction

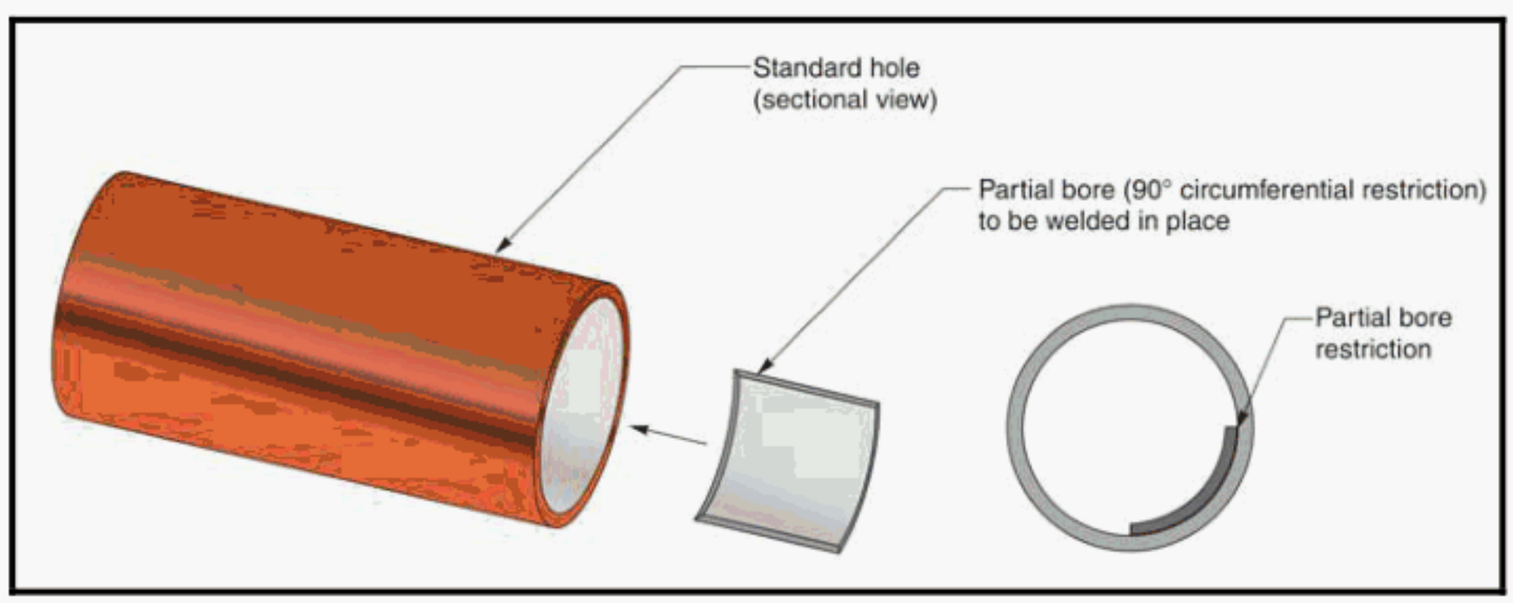

Figure 9—Components That Make Up the Partial Bore Test Fixture

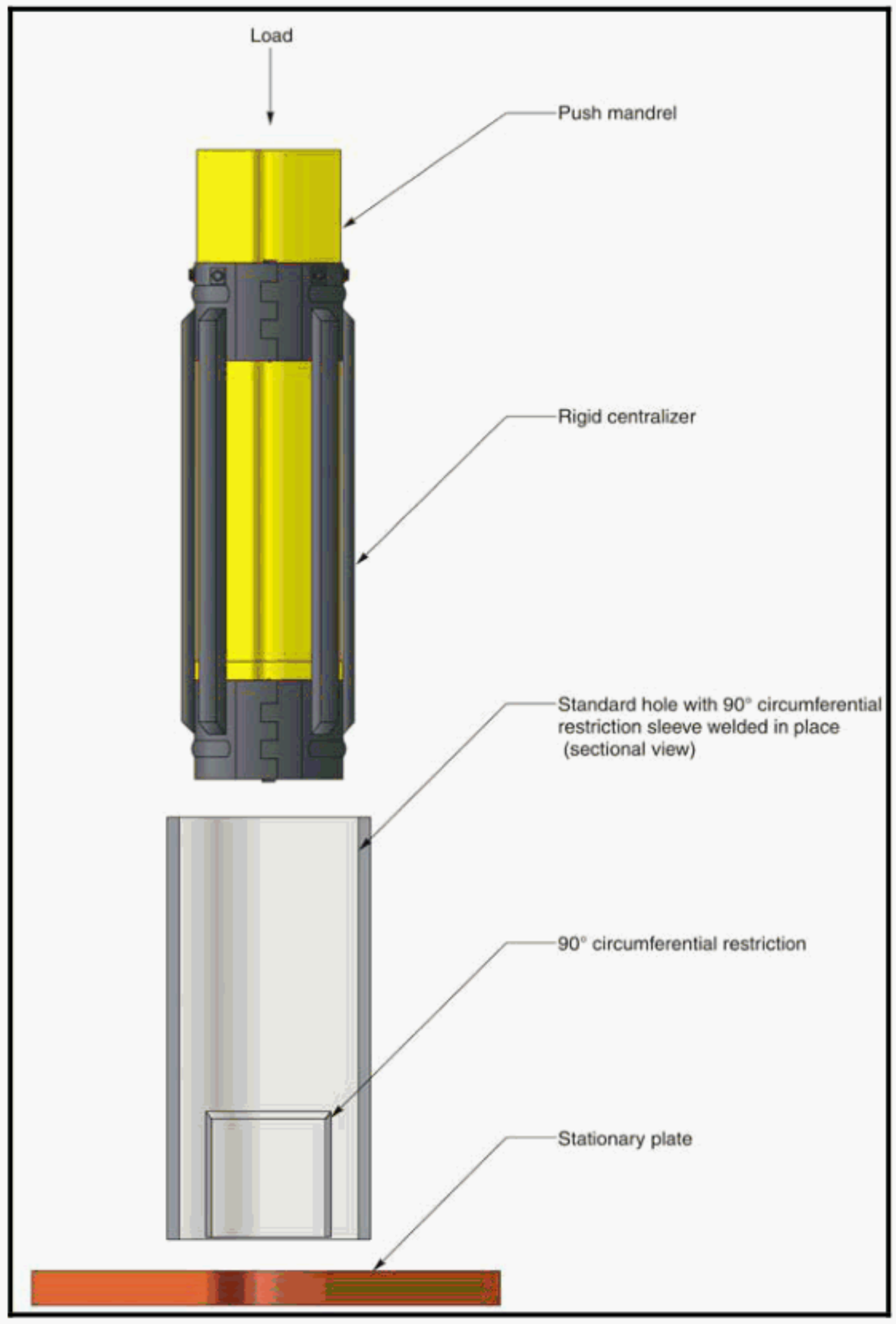

Figure 10—Typical Test Set-up with a Rigid Centralizer Being Forced into a Bore with a 90° Partial Restriction

8 Test to Simulate Side Loading of the Centralizer

8.1 Test Apparatus

A load frame capable of applying loads up to 50,000 lbf, with strain-gauge measurement and simultaneous distance measurement with $^{1}/_{32}$-in. minimum resolution is used. The inner pipe for the test should be within tolerances shown in ISO 11960 (or API Spec 5CT). The inner pipe should be longer than the centralizer and longer than the outer pipe to allow for support by the load frame and should be free from burrs or similar defects. The inner test pipe should be similar to the inner test pipe used to perform a starting or running force test as required by API Specification 10D (ISO 10427-1). In addition, the inner test pipe must be sufficiently robust to withstand expected loads. The pipe should have a wall thickness/length ratio to withstand a minimum of 50,000 lbf of side loading when supported at each end. The outer pipe should be longer than the centralizer but shorter than the inner pipe to allow the inner pipe support by the load frame. Tolerance of the inside diameter of the outer casing should be $+^{1}/_{8}$ in./$-^{1}/_{32}$-in. of the hole size it is simulating.

The test needs to be performed with the inner pipe and the outer pipe within 5 degrees of horizontal. The forces should be applied at the midpoint of the centralizer blade or fin longitudinally, i.e. the centralizer should be at the midpoint between two supports of the load frame with the load applied at the center of the two supports.

8.2 Test Procedure

1. Apply external force to the outer pipe so it is transferred to the inner pipe vertically through the point of contact between the centralizer blade or fin with the outer pipe (see Figure 11, Position 1). Apply this force until blade failure or to a maximum of 50,000 lbf. Measure and report the condition of the blades and centralizer before and after the test. Report test conditions.
2. Apply an external force to the outer pipe so that it is transferred to the inner pipe vertically midway between two centralizer blades or fins as shown in Figure 11, Position 2. Apply this force until blade failure or to a maximum of 50,000 lbf. Measure and report the condition of the blades and centralizer before and after the test. Report test conditions.
3. Each blade or fin should have this force applied directly over and between each set of blades or fins as previously described in Steps 1 and 2.

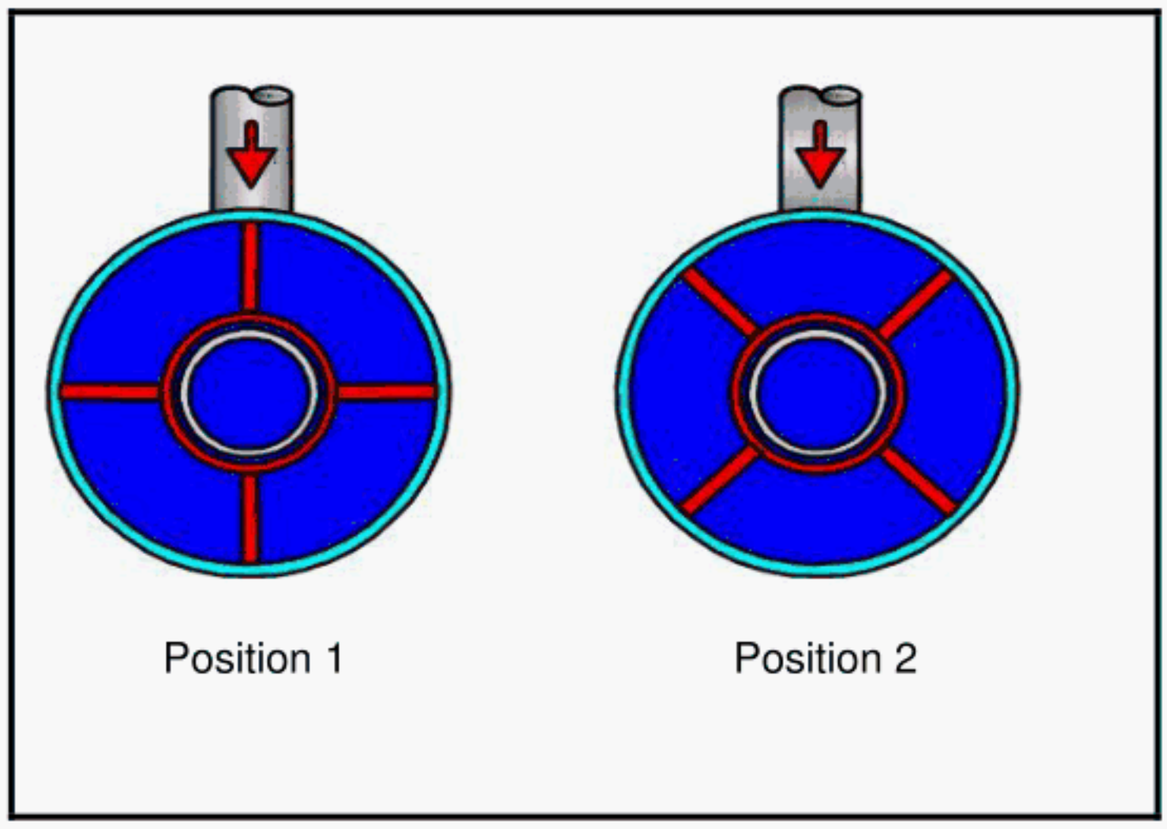

Figure 11—Side Loading Testing of Centralizers

9 Test to Simulate Static Loading of Centralizer and Stop Collar

9.1 Test Apparatus

The purpose of this test is to evaluate the centralizer end ring or body and stop collar or limit clamp for damage or deformation as a result of the applied load. Figure 12 illustrates how this test should be conducted. The centralizer is installed but not rigidly attached on a properly-selected section of casing (casing size corresponding to manufacturer recommendations and casing hardness corresponding to that to be used in the given well). Next, the centralizer is loaded using another section of pipe that fits over the first one, but which applies the load directly to the centralizer.

9.2 Test Procedure

This procedure is similar to the one described in API Spec 10D (ISO 10427-1) to test stop collars. The load should be applied directly to the centralizer. The maximum load should be adjusted based on maximum casing load allowed, or 50,000 lbf, whichever is less. Damage or deformation of the centralizer or stop collar should be reported. Likewise, movement of the stop collar, load at start of movement, and running forces should be recorded. Depth, shape, and length of the damage to the casing (scarring) should be measured and reported.

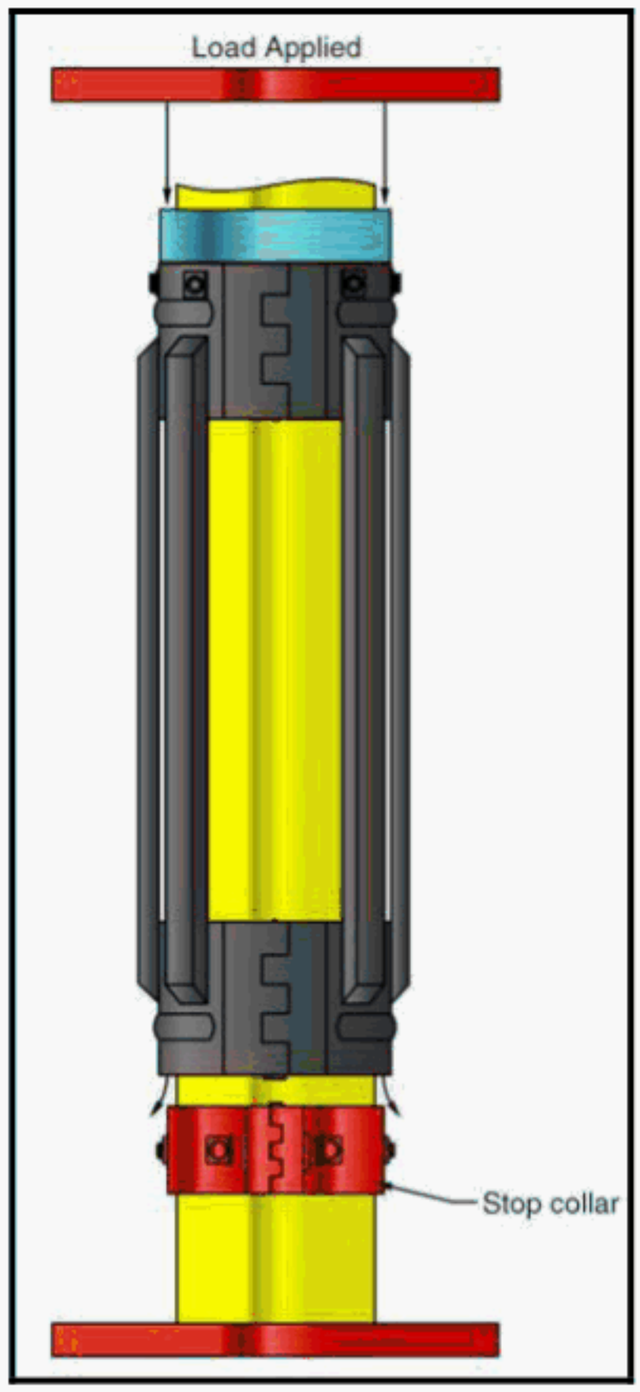

Figure 12—Centralizer on a Test Mandrel with a Limit Clamp or Stop Collar

10 Pull-apart Test for Centralizers with End Rings

This test should be performed on centralizers with end rings and is performed in a fixture similar to that shown in Figure 5. However, load rate should be applied slowly, rather than dynamically as described in 6.1. Loading should continue until failure but should not exceed 50,000 lbf.

energy API

2008 Publications Order Form

Effective January 1, 2008.
API Members receive a 30% discount where applicable.
The member discount does not apply to purchases made for the purpose of resale or for incorporation into commercial products, training courses, workshops, or other commercial enterprises.

Available through IHS:

Phone Orders:	1-800-854-7179	(Toll-free in the U.S. and Canada)
	303-397-7956	(Local and International)
Fax Orders:	303-397-2740	
Online Orders:	global.ihs.com	

Date: _____ ❑ **API Member** (Check if Yes)

Invoice To (❑ Check here if same as "Ship To")

Name:
Title:
Company:
Department:
Address:
City: State/Province:
Zip/Postal Code: Country:
Telephone:
Fax:
Email:

Ship To (UPS will not deliver to a P.O. Box)

Name:
Title:
Company:
Department:
Address:
City: State/Province:
Zip/Postal Code: Country:
Telephone:
Fax:
Email:

Quantity	Title	SO★	Unit Price	Total
	Spec 10D/ISO 10427-1, Specification for Bow-Spring Casing Centralizers		$83.00	
	RP 10D-2/ISO 10427-2, Centralizer Placement and Stop Collar Testing		$71.00	
	RP 10F/ISO 10427-3, Recommended Practice for Performance Testing of Cementing Float Equipment		$60.00	

❑ Payment Enclosed ❑ P.O. No. (Enclose Copy) _____
❑ Charge My IHS Account No. _____
❑ VISA ❑ MasterCard ❑ American Express
❑ Diners Club ❑ Discover

Credit Card No.:
Print Name (As It Appears on Card):
Expiration Date:
Signature:

Subtotal _____
Applicable Sales Tax (see below) _____
Rush Shipping Fee (see below) _____
Shipping and Handling (see below)
Total (in U.S. Dollars)

★ To be placed on Standing Order for future editions of this publication, place a check mark in the SO column and sign here:

Pricing and availability subject to change without notice.

Mail Orders – Payment by check or money order in U.S. dollars is required except for established accounts. State and local taxes, $10 processing fee, and 5% shipping must be added. Send mail orders to: **API Publications, IHS, 15 Inverness Way East, c/o Retail Sales, Englewood, CO 80112-5776, USA.**

Purchase Orders – Purchase orders are accepted from established accounts. Invoice will include actual freight cost, a $10 processing fee, plus state and local taxes.

Telephone Orders – If ordering by telephone, a $10 processing fee and actual freight costs will be added to the order.

Sales Tax – All U.S. purchases must include applicable state and local sales tax. Customers claiming tax-exempt status must provide IHS with a copy of their exemption certificate.

Shipping (U.S. Orders) – Orders shipped within the U.S. are sent via traceable means. Most orders are shipped the same day. Subscription updates are sent by First-Class Mail. Other options, including next-day service, air service, and fax transmission are available at additional cost. Call 1-800-854-7179 for more information.

Shipping (International Orders) – Standard international shipping is by air express courier service. Subscription updates are sent by World Mail. Normal delivery is 3-4 days from shipping date.

Rush Shipping Fee – Next Day Delivery orders charge is $20 in addition to the carrier charges. Next Day Delivery orders must be placed by 2:00 p.m. MST to ensure overnight delivery.

Returns – All returns must be pre-approved by calling the IHS Customer Service Department at 1-800-624-3974 for information and assistance. There may be a 15% restocking fee. Special order items, electronic documents, and age-dated materials are non-returnable.

THERE'S MORE WHERE THIS CAME FROM.

API provides additional resources and programs to the oil and natural gas industry which are based on API Standards. For more information, contact:

API MONOGRAM® LICENSING PROGRAM
Phone: 202-962-4791
Fax: 202-682-8070
Email: certification@api.org

API QUALITY REGISTRAR (APIQR®)
> ISO 9001 Registration
> ISO/TS 29001 Registration
> ISO 14001 Registration
> API Spec Q1® Registration

Phone: 202-962-4791
Fax: 202-682-8070
Email: certification@api.org

API PERFORATOR DESIGN REGISTRATION PROGRAM
Phone: 202-682-8490
Fax: 202-682-8070
Email: perfdesign@api.org

API TRAINING PROVIDER CERTIFICATION PROGRAM (API TPCP™)
Phone: 202-682-8490
Fax: 202-682-8070
Email: tpcp@api.org

API INDIVIDUAL CERTIFICATION PROGRAMS (ICP®)
Phone: 202-682-8064
Fax: 202-682-8348
Email: icp@api.org

API ENGINE OIL LICENSING AND CERTIFICATION SYSTEM (EOLCS)
Phone: 202-682-8516
Fax: 202-962-4739
Email: eolcs@api.org

API PETROTEAM (TRAINING, EDUCATION AND MEETINGS)
Phone: 202-682-8195
Fax: 202-682-8222
Email: petroteam@api.org

API UNIVERSITY™
Phone: 202-682-8195
Fax: 202-682-8222
Email: training@api.org

Check out the API Publications, Programs, and Services Catalog online at www.api.org.

energy API

Copyright 2008 – API, all rights reserved. API, API monogram, APIQR, API Spec Q1, API TPCP, ICP, API University and the API logo are either trademarks or registered trademarks of API in the United States and/or other countries.

1220 L Street, NW
Washington, DC 20005-4070
USA

202.682.8000

Additional copies are available through IHS
Phone Orders: 1-800-854-7179 (Toll-free in the U.S. and Canada)
303-397-7956 (Local and International)
Fax Orders: 303-397-2740
Online Orders: global.ihs.com

Information about API Publications, Programs and Services
is available on the web at **www.api.org**

Product No. G10TR50