Plate-and-Frame Heat Exchangers

API STANDARD 667 (FORMERLY API STANDARD 662-1)
FIRST EDITION, MARCH 2022

American Petroleum Institute

Copyright American Petroleum Institute

Special Notes

API publications necessarily address problems of a general nature. With respect to particular circumstances, local, state, and federal laws and regulations should be reviewed. The use of API publications is voluntary. In some cases, third parties or authorities having jurisdiction may choose to incorporate API standards by reference and may mandate compliance.

Neither API nor any of API's employees, subcontractors, consultants, committees, or other assignees make any warranty or representation, either express or implied, with respect to the accuracy, completeness, or usefulness of the information contained herein, or assume any liability or responsibility for any use, or the results of such use, of any information or process disclosed in this publication. Neither API nor any of API's employees, subcontractors, consultants, or other assignees represent that use of this publication would not infringe upon privately owned rights.

API publications may be used by anyone desiring to do so. Every effort has been made by the Institute to ensure the accuracy and reliability of the data contained in them; however, the Institute makes no representation, warranty, or guarantee in connection with this publication and hereby expressly disclaims any liability or responsibility for loss or damage resulting from its use or for the violation of any authorities having jurisdiction with which this publication may conflict.

API publications are published to facilitate the broad availability of proven, sound engineering and operating practices. These publications are not intended to obviate the need for applying sound engineering judgment regarding when and where these publications should be used. The formulation and publication of API publications is not intended in any way to inhibit anyone from using any other practices.

Any manufacturer marking equipment or materials in conformance with the marking requirements of an API standard is solely responsible for complying with all the applicable requirements of that standard. API does not represent, warrant, or guarantee that such products do in fact conform to the applicable API standard.

Classified areas may vary depending on the location, conditions, equipment, and substances involved in any given situation. Users of this standard should consult with the appropriate authorities having jurisdiction.

Users of this standard should not rely exclusively on the information contained in this document. Sound business, scientific, engineering, and safety judgment should be used in employing the information contained herein.

Where applicable, authorities having jurisdiction should be consulted.

API is not undertaking to meet the duties of employers, manufacturers, or suppliers to warn and properly train and equip their employees, and others exposed, concerning health and safety risks and precautions, nor undertaking their obligations to comply with authorities having jurisdiction.

All rights reserved. No part of this work may be reproduced, translated, stored in a retrieval system, or transmitted by any means, electronic, mechanical, photocopying, recording, or otherwise, without prior written permission from the publisher. Contact the Publisher, API Publishing Services, 200 Massachusetts Avenue, NW, Suite 1100, Washington, DC 20001-5571.

Copyright © 2022 American Petroleum Institute

Copyright American Petroleum Institute

Foreword

Nothing contained in any API publication is to be construed as granting any right, by implication or otherwise, for the manufacture, sale, or use of any method, apparatus, or product covered by letters patent. Neither should anything contained in the publication be construed as insuring anyone against liability for infringement of letters patent.

The verbal forms used to express the provisions in this document are as follows.

Shall: As used in a standard, "shall" denotes a minimum requirement to conform to the standard.

Should: As used in a standard, "should" denotes a recommendation or that which is advised but not required to conform to the standard.

May: As used in a standard, "may" denotes a course of action permissible within the limits of a standard.

Can: As used in a standard, "can" denotes a statement of possibility or capability.

This document was produced under API standardization procedures that ensure appropriate notification and participation in the developmental process and is designated as an API standard. Questions concerning the interpretation of the content of this publication or comments and questions concerning the procedures under which this publication was developed should be directed in writing to the Director of Standards, American Petroleum Institute, 200 Massachusetts Avenue, NW, Suite 1100, Washington, DC 20001. Requests for permission to reproduce or translate all or any part of the material published herein should also be addressed to the director.

Generally, API standards are reviewed and revised, reaffirmed, or withdrawn at least every five years. A one-time extension of up to two years may be added to this review cycle. Status of the publication can be ascertained from the API Standards Department, telephone (202) 682-8000. A catalog of API publications and materials is published annually by API, 200 Massachusetts Avenue, NW, Suite 1100, Washington, DC 20001.

Suggested revisions are invited and should be submitted to the Standards Department, API, 200 Massachusetts Avenue, NW, Suite 1100, Washington, DC 20001, standards@api.org.

Copyright American Petroleum Institute

--`,,```,,,,``,,,,``,,,,```,,,,```,,,,-`-`,,`,,`,`,,`---
Copyright American Petroleum Institute

Contents

Page

1 Scope 1

2 Normative References 1

3 Terms and Definitions 1

4 General 6

5 Proposal Information Required 6

6 Drawings and Other Data Requirements 8
6.1 Outline Drawings and Other Supporting Data 8
6.2 Information Required After Outline Drawings Are Reviewed 9
6.3 Reports and Records 10

7 Design 11
7.1 General 11
7.2 Design Temperature 11
7.3 Design Pressure 11
7.4 Fouling Margin 11
7.5 Corrosion Allowance 11
7.6 Components 12
7.7 Connections 13
7.8 Plate Gaskets 17

8 Materials 18
8.1 General 18
8.2 Requirements for Carbon Steel in Sour or Wet Hydrogen Sulfide Service 19

9 Fabrication 19
9.1 Welding 19
9.2 Plate Gasket Installation 19
9.3 Assembly 20

10 Inspection and Testing 20
10.1 Quality Control 20
10.2 Hydrostatic Testing 21
10.3 Nameplates 21

11 Preparation for Shipment 22

Annex A (informative) Recommended Practice 23

Annex B (informative) Plate-and-Frame Heat Exchanger Checklist 34

Annex C (informative) Plate-and-Frame Heat Exchanger Datasheets 36

Bibliography 45

Copyright American Petroleum Institute

Contents

Page

Figures

1 Heat Transfer Plate Dimensions, Geometry and Diagrammatic View of Terms Used 3
2 Heat Transfer Plate Gap 4
3 Typical Single-pass Plate-and-Frame Heat Exchanger 5
4 Typical Connection Geometries 14
5 Directions of Forces and Moments on Connections 16
6 Typical Heat Transfer Plate Gasket 18
A.1 Typical Configuration with Separate Port Gasket Material 31

Tables

1 Allowable Forces and Moments on Connections at the Fixed Cover 16
A.1 Recommended Targets for Fouling Margins and Wall Shear Stress 26
A.2 Wall Shear Stress Two Worked Examples 28
B.1 Checklist 34

Copyright American Petroleum Institute

Introduction

It is necessary that users of this standard be aware that further or differing requirements can be needed for individual applications. This standard is not intended to inhibit a vendor from offering, or the purchaser from accepting, alternative equipment or engineering solutions for the individual application. This can be particularly applicable where there is an innovative or developing technology. Where an alternative is offered, it is the responsibility of the vendor to identify any variations from this standard and provide details.

This standard has been re-numbered; it was previously published as API standard 662, Part 1.

A recommended practice is included within this standard (see Annex A).

This standard requires the purchaser to specify certain details and features.

A bullet [•] in the margin indicates a requirement for the purchaser to make a decision or provide information (for information, a checklist is provided in Annex B).

In this standard, where practical, U.S. customary units are included in parentheses for information.

Copyright American Petroleum Institute

--`,,```,,,,``,,,,``,,,,,```,,,,`,,,,`,,,,-`-`,,`,,`,`,,`---
Copyright American Petroleum Institute

Plate-and-Frame Heat Exchangers

1 Scope

This standard gives requirements and recommendations for the mechanical design, materials selection, fabrication, inspection, testing, and preparation for shipment of plate-and-frame heat exchangers for use in petroleum, petrochemical, and natural gas industries.

It is applicable to gasketed and semi-welded plate-and-frame heat exchangers.

This document does not cover the requirements for fully welded plate-and-frame, fully welded plate-block, brazed plate, or plate-in-shell heat exchangers.

2 Normative References

The following referenced documents are indispensable for the application of this document. For dated references, only the edition cited applies. For undated references, the latest edition of the referenced document (including any amendments) applies.

NACE MR0103,[1] *Materials Resistant to Sulfide Stress Cracking in Corrosive Petroleum Refining Environments*

NACE MR0175, *Petroleum and natural gas industries—Materials for use in H_2S containing environments in oil and gas production—Parts 1, 2 and 3*

NACE SP0472, *Methods and Controls to Prevent In-Service Environmental Cracking of Carbon Steel Weldments in Corrosive Petroleum Refining Environments*

3 Terms and Definitions

For the purposes of this document, the following terms and definitions apply.

3.1
channel
Fluid flow passage created by two adjacent plates.

3.2
cyclic service
Process operation with periodic variation in temperature, pressure, and/or flow rate.

3.3
drip tray
Tray that is able to collect droplets from an entire heat exchanger plate pack.

3.4
end plate
cover plate
Plate which prevent the fluids in a plate-and-frame heat exchanger from contacting the fixed and movable covers.

NOTE There are two end plates, one at each end of the plate-and-frame heat exchanger.

[1] NACE International (formerly the National Association of Corrosion Engineers), 15835 Park Ten Place, Houston Texas 77084, www.nace.org.

Copyright American Petroleum Institute

3.5
frame
Assembly that provides the structural support and pressure containment.

NOTE The frame may consist of upper and lower carrying bars, mounting feet, tie bolts, fixed and movable covers, and a support column.

3.6
heat transfer area
Sum of the surface areas of one side of all plates in contact with both heat-transfer fluids.

NOTE 1 The heat transfer surface area is one side of the plate.

NOTE 2 Areas of end plates are not included.

3.7
heat transfer plate
Sheet of metal precision-pressed or -formed into a corrugated pattern.

NOTE See Figure 1 for plate dimensions, geometry and diagrammatic view of terms used.

3.8
item number
Purchaser's identification number for a heat exchanger.

3.9
liner
A thin alloy sleeve used on port or nozzle components, to isolate the process fluid from the pressure boundary backing material.

3.10
minimum design metal temperature
MDMT
Lowest metal temperature at which pressure-containing components can be subjected to design pressure.

EXAMPLE Ambient temperature or minimum process fluid temperature.

3.11
pass plate
Plate used to change the direction of flow of a stream in a plate-and-frame heat exchanger with two or more passes.

3.12
plate chevron angle
The angle formed between the plate pattern and the line perpendicular to the flow direction.

NOTE 1 For the purposes of this standard the plate chevron angle is as defined above. The user is cautioned however that some vendors and software package suppliers may use a different definition.

NOTE 2 Figure 1 shows a typical heat transfer plate.

Copyright American Petroleum Institute

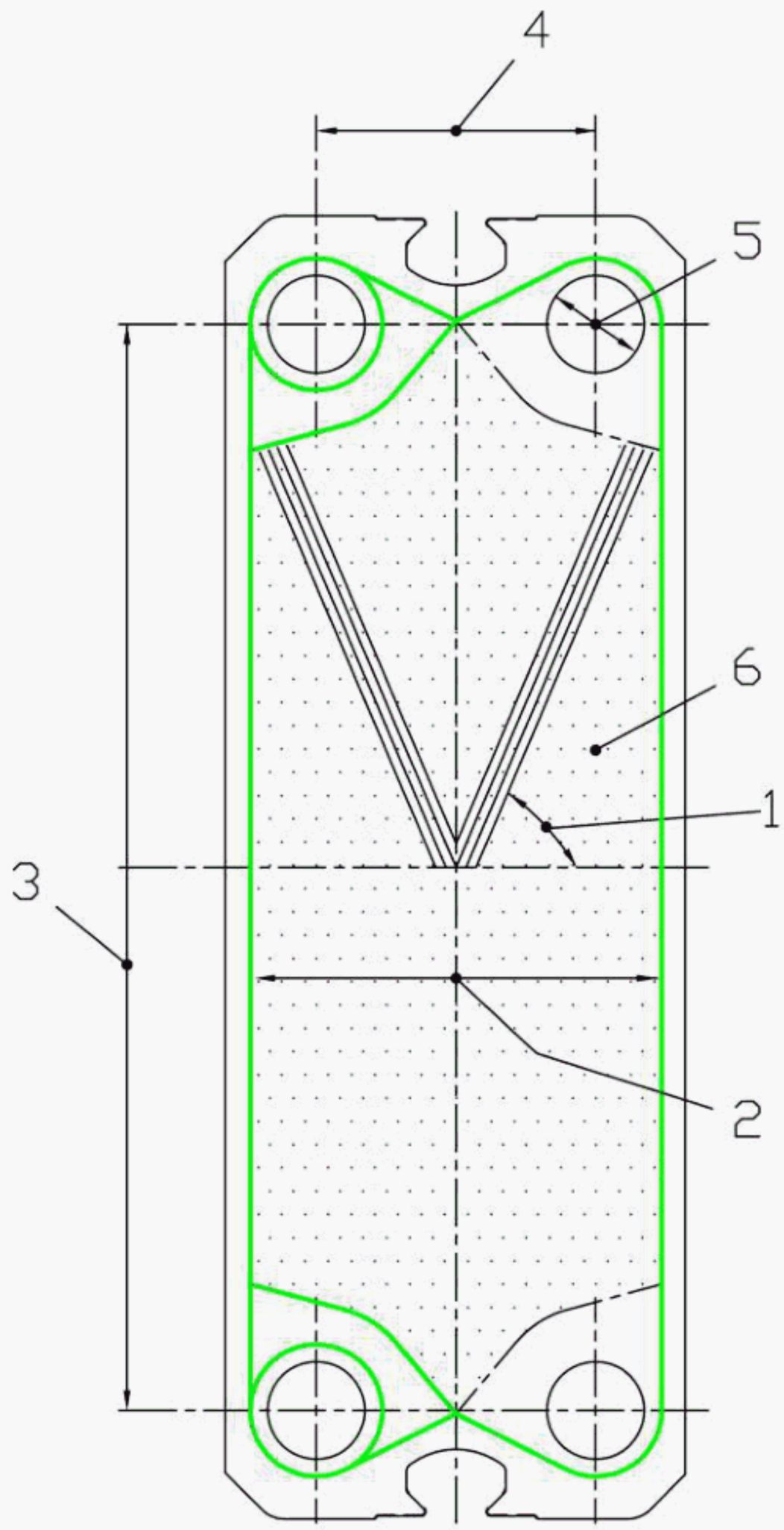

Key

1 Chevron angle, perpendicular to flow direction
2 Channel flow width, measured to the inside gasket edge
3 Port center-to-center distance, vertical
4 Port center-to-denter distance, horizontal
5 Port diameter
6 Single plate heat transer area, dotted region

Figure 1—Heat Transfer Plate Dimensions, Geometry and Diagrammatic View of Terms Used

3.13
plate gap
channel spacing
Maximum distance between adjacent heat transfer plates.

Copyright American Petroleum Institute

NOTE Figure 2 shows a typical plate gap.

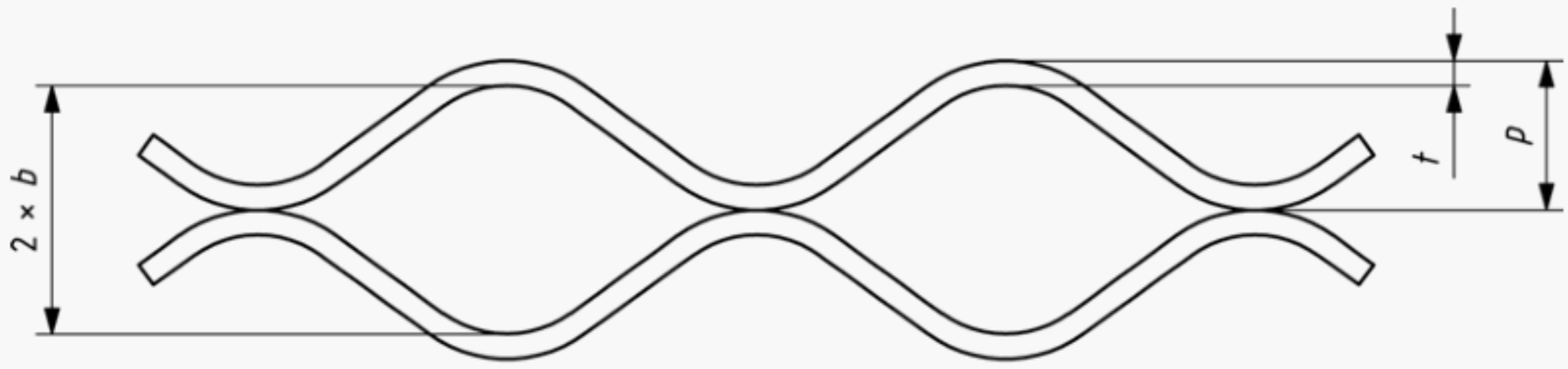

where $b = p - t$

Key

$2 \times b$	plate gap
b	forming or pressing depth
t	plate thickness
p	pitch per plate

Figure 2—Heat Transfer Plate Gap

3.14
plate pack
Assembly of all heat transfer plates in the heat exchanger.

3.15
plate-and-frame heat exchanger
Assembly of a gasketed or semi-welded plate pack and its supporting frame.

NOTE Figure 3 shows typical components of a plate-and-frame heat exchanger.

--`,,```,,,

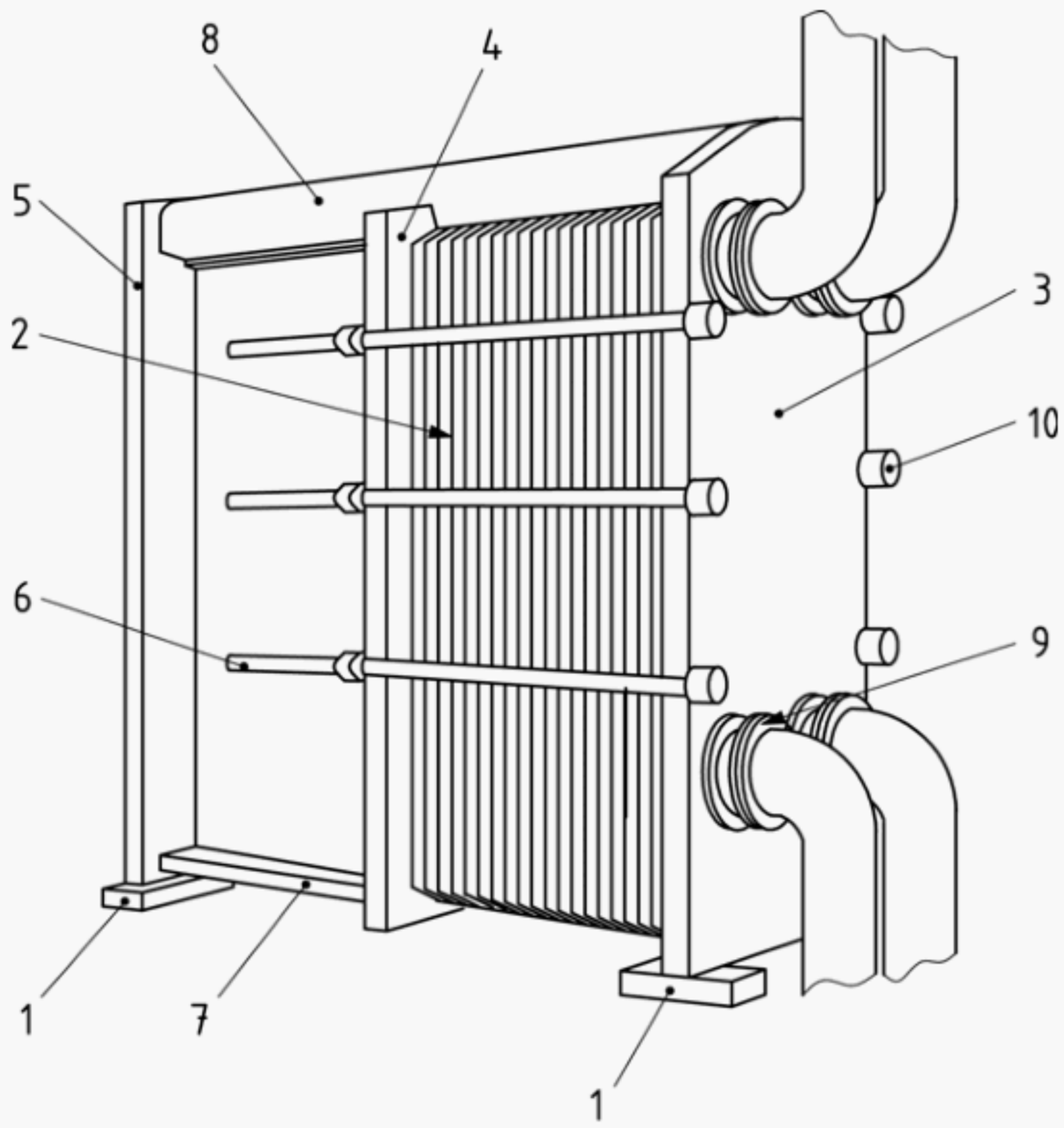

Key

1	mounting feet	6	tie bolts
2	plate pack	7	guide bar (bottom)
3	fixed cover	8	carrying bar (top)
4	movable cover	9	connections, studded or flanged
5	support column	10	tie nuts

Figure 3—Typical Single-pass Plate-and-Frame Heat Exchanger

3.16
port
Inlet or outlet opening in the heat transfer and end plates.

3.17
pressure design code
The recognized pressure vessel design code or standard as specified or agreed by the purchaser.

EXAMPLE ASME BPVC Section VIII, EN 13445 (all parts).

3.18
semi-welded plate pair
Two adjacent plates welded together where the weld replaces the function of a gasket.

NOTE Gaskets are used to seal adjacent semi-welded plate pairs.

3.19
shroud
Removable covering for the top and sides of the plate pack of the plate-and-frame heat exchanger, which provides protection in the event of a spray leak or fire.

Copyright American Petroleum Institute

3.20
structural welding code
The recognized structural welding code as specified or agreed by the purchaser.

3.21
tie bolt
Bolts used to compress plate pack, movable and fixed covers to contain pressure.

4 General

[•] **4.1** The pressure design code shall be specified or agreed by the purchaser. Pressure components (i.e. covers, tie bolts, tie nuts and connections) shall comply with the pressure design code and the supplemental requirements in this standard.

[•] **4.2** The structural welding code shall be specified or agreed by the purchaser.

4.3 Annex A includes some recommended mechanical and design details for information.

4.4 Annex B provides a checklist that can be used by the purchaser to ensure that bulleted items in this standard are addressed.

4.5 Annex C provides examples of datasheets.

[•] **4.6** The vendor shall comply with the applicable local regulations specified by the purchaser.

[•] **4.7** The purchaser shall specify if the service is designated as sour in accordance with NACE MR0175 (all parts) for oil and gas production facilities and natural gas processing plants or is designated as wet hydrogen sulfide service in accordance with NACE MR0103 for other applications (e.g. petroleum refineries, LNG plants, and chemical plants), in which case all carbon steel materials and welds in contact with the process fluid shall meet the requirements of the applicable standard to mitigate potential for sulfide stress cracking (SSC). Identification of the complete set of materials, qualification, fabrication, and testing specifications to prevent in-service environmental cracking is the responsibility of the user (purchaser). See A.1.1 for guidance on sour or wet hydrogen sulfide service.

[•] **4.8** The purchaser shall specify if the requirements of 4.7, 8.2, and the related clauses for sour or wet hydrogen sulfide service, shall be applied where carbon steel is isolated from process fluid contact by the use of liners. See A.1.1 for additional guidance on the use of loose liners.

[•] **4.9** The purchaser shall specify if cyclic service design is required. See A.1.2 for additional guidance on cyclic service.

4.10 If cyclic service is specified, the purchaser shall specify the type and magnitude of variation in pressure, temperature, composition and flow rate, the time for the variation (hours, weeks, months, etc.) and the number of cycles or frequency for this variation expected during the life of the equipment. The extent and acceptance criteria of any required analysis shall be subject to the agreement of the purchaser. See A.1.2 for guidance on cyclic service.

5 Proposal Information Required

5.1 The vendor's proposal shall include, as a minimum, the following information:

a) datasheets;

b) preliminary general arrangement drawing including overall dimensional information and mass;

c) nozzle sizes and locations;

Copyright American Petroleum Institute

d) gasket material and attachment method;

e) heat transfer plate material, thickness, and dimensions;

f) number of heat transfer plates;

g) maximum particle size that can pass through heat transfer plate gap;

h) fouling margin.

5.2 For components that are not fully identified by Section 3, the vendor shall describe the details of construction and assembly.

5.3 The vendor shall include a detailed description of any exception to the requirements of the purchaser's enquiry.

5.4 The first-time use of a plate-and-frame heat exchanger design, component, or material by the vendor for the purchaser's intended service shall be clearly indicated by the vendor.

5.5 The vendor shall state the anticipated life of the proposed gaskets in the specified service considering the operating pressures and temperatures. The vendor shall also state the anticipated life in storage and any special requirements for gasket storage required to maintain gasket shelf-life.

5.6 The vendor shall state the method of support used for the movable cover (i.e. roller or slide).

5.7 The vendor shall supply a recommended spare parts list for each plate-and-frame heat exchanger.

5.8 The vendor shall guarantee the thermal and hydraulic performance of the exchangers offered.

[•] **5.9** When specified by the purchaser, the vendor shall provide the following data that will allow the purchaser to perform a thermal verification (See A.2.1 for additional guidance on thermal and hydraulic design. See Figure 1 for diagrammatic view of terms used.):

a) Heat Transfer Plate(s) information:

1) chevron angle(s) used in the design;

2) plate thickness;

3) heat transfer surface area per plate;

4) number of effective plates;

5) plate material.

b) Port information:

1) port diameters;

2) port center-to-center distance, horizontal;

3) port center-to-center distance, vertical;

4) port arrangement, locations of inlets and outlets for hot and cold streams.

c) Plate pack information:

Copyright American Petroleum Institute

1) plate gap for each stream;

2) channel width;

3) number of packs in series;

4) number of packs in parallel;

5) number of hot fluid passes per pack;

6) number of cold fluid passes per pack;

7) number of channels in each hot fluid pass (can be different for each pass);

8) number of channels in each cold fluid pass (can be different for each pass);

9) flow configuration:

   i.) flow in each pass (countercurrent/cocurrent);

   ii.) inlet port locations (same end/opposite end);

   iii.) diagonal or parallel flow on each plate;

   iv.) plate type(s) for the channel configuration in each pack.

5.10 The vendor shall supply the calculated pressure drop for the ports (combined inlet and outlet) as well as the overall pressure drop from nozzle-to-nozzle for each stream. See A.2.2.1 for additional guidance on port pressure drop.

5.11 The vendor shall provide port inlet and outlet flow velocities. See A.2.2.2 for additional guidance on the flow within ports.

5.12 The vendor shall provide details of connections including any lining, cladding and method of attachment to covers.

6 Drawings and Other Data Requirements

6.1 Outline Drawings and Other Supporting Data

6.1.1 The vendor shall submit, for review by the purchaser, outline drawings for each plate-and-frame heat exchanger unit. The drawings shall include the following information:

a) service, item number, project name and location, purchaser's order number, vendor's shop order number and other special identification numbers;

b) design pressure, test pressure, maximum design temperature, minimum design metal temperature and any restriction on testing or operation of the heat exchanger;

c) connection sizes, location, orientation, projection, direction of flow and, if flanged, the rating and facing including any lining, cladding and method of attachment to the covers;

d) dimensions and location of supports, including bolt holes and slots;

e) overall dimensions of the heat exchanger;

Copyright American Petroleum Institute

f) maximum and minimum compressed plate pack length (to ensure metal-to-metal plate contact);

g) side clearance required for heat transfer plate removal;

h) mass of the heat exchanger, empty and full of water;

i) mass of the heat exchanger at maximum heat transfer plate capacity empty and full of water;

j) specified corrosion allowance, not including heat transfer plates, for each side of the heat exchanger;

k) applicable code(s);

l) list of, or reference to, purchaser's specification(s);

m) requirements for, or reference to, NDE examination;

n) requirements for, or reference to, surface preparation and painting;

o) gasket materials, attachment method (e.g. glued, clip-on, etc.), and glue type if any;

p) location of nameplates, lifting lugs, grounding lugs or other attachments;

q) location of center of gravity of the exchanger for empty and operating conditions;

r) material specifications and grades for all components;

s) forces and moments on connections;

t) number of heat transfer plates installed and maximum number of heat transfer plates for specified frame.

6.1.2 The vendor shall provide tie bolt tightening procedures for review.

6.1.3 The vendor shall recommend the tools needed for the assembly and maintenance of the plate-and-frame heat exchanger.

6.1.4 The review of engineering documents by the purchaser shall not relieve the vendor of the responsibility of meeting the requirements of the purchase order.

6.1.5 If a fireproof shroud is specified, the vendor shall submit proof that the proposed design has passed suitable type testing.

6.2 Information Required After Outline Drawings Are Reviewed

6.2.1 Upon receipt of the purchaser's review comments on the outline drawings, the vendor shall submit copies of all detailed (nonproprietary) drawings. These shall fully describe the plate-and-frame heat exchanger and shall include at least the following information:

a) full views with dimensions and materials;

b) heat transfer plate details, as specified in 5.9;

c) details of each pressure-retaining weld, including weld material, weld nominal thickness, weld location and applicable nondestructive examination method;

d) details of the weld joining semi-welded heat transfer plate pairs, including weld location and applicable non-destructive examination;

Copyright American Petroleum Institute

e) details of each weld and weld nominal thickness for non-pressure attachments welded to pressure parts and for all load bearing attachments;

f) complete bills of materials, including the material specifications and part numbers for all components;

g) details of cladding and weld overlay;

h) flange-face finish;

i) connection lining details.

[•] **6.2.2** If specified by the purchaser, the vendor shall furnish copies of applicable welding procedure specifications, welding procedure qualifications and weld map for review or record.

[•] **6.2.3** If specified by the purchaser, the vendor shall furnish copies of applicable calculations for review or record, including mechanical design calculations for supports, lifting devices and nozzle load calculations.

[•] **6.2.4** If specified by the purchaser, the vendor shall supply information about its quality control system and shall supply a quality control plan.

6.3 Reports and Records

[•] **6.3.1** After the plate-and-frame heat exchanger is completed, the vendor shall furnish the following documents in the format and quantities specified by the purchaser:

a) "as-built" datasheets;

b) all outline and detail drawings, marked "CERTIFIED AS-BUILT";

c) all mechanical design calculations, marked "CERTIFIED AS-BUILT";

d) mill test reports for all pressure-retaining parts, including heat transfer plates (each material test report shall be identified by a part number);

e) completed manufacturer's data report in accordance with the pressure design code;

f) nameplate rubbing or a photograph;

g) all associated NDE reports, including radiographic, magnetic-particle, liquid-penetrant, ultrasonic, hardness, impact, positive material identification (PMI) and any other reports as applicable;

h) pressure test records or report;

i) assembly instructions;

j) spare parts list;

k) user's manual containing:

1) technical description;

2) operating instructions;

3) installation and maintenance instructions (including lifting and handling).

--`,,```,,,

7 Design

7.1 General

7.1.1 The frame and tie bolts of the gasketed or semi-welded plate-and-frame heat exchanger shall be designed to permit the future installation of at least 20 % additional heat transfer plates unless otherwise specified by the purchaser.

7.1.2 Gasketed heat transfer plates shall be replaceable individually, and semi-welded heat transfer plates in pairs, without having to remove any other heat transfer plate.

7.1.3 The plate pack shall incorporate means for positive alignment of the heat transfer plates and gaskets.

7.2 Design Temperature

[•] **7.2.1** The purchaser shall specify a maximum design temperature and a minimum design metal temperature.

7.2.2 The design temperatures shall be used for the design of all pressure-retaining components, including the gasket selection temperature. See A.3.1 for additional information on gasket selection.

7.3 Design Pressure

Unless otherwise specified or approved by the purchaser, the plate-and-frame heat exchanger shall be designed for design pressure on either side, with atmospheric pressure or, if specified, vacuum on the other side.

7.4 Fouling Margin

[•] The purchaser shall specify a percentage fouling margin, *F*, calculated by:

$$F = \left(\frac{U_{\text{clean}}}{U_{\text{service}}} - 1\right) \times 100 \tag{1}$$

where

U is the heat transfer coefficient (overall thermal transmittance).

See A.3.2 for additional guidance on fouling margins.

See A.3.2.5 for guidance when particulates may be present.

7.5 Corrosion Allowance

7.5.1 Corrosion allowance shall not be added to heat transfer plate thickness. See A.3.3 for additional guidance.

7.5.2 A corrosion allowance shall be applied to the wetted surfaces of nozzle connections and fixed/movable covers when these components are not otherwise provided in corrosion resistant materials, or provided with a corrosion resistant lining, or weld overlay. For carbon steel wetted surfaces a minimum of 3 mm ($^1/_8$ in.) corrosion allowance shall be provided unless otherwise specified by the purchaser.

7.5.3 If weld overlay is used, the full overlay thickness shall be used only as corrosion allowance and not as the pressure retaining envelope.

7.5.4 Weld overlay shall have sufficient thickness to provide the specified chemical composition to a depth of at least 1.5 mm ($^1/_{16}$ in.) from the finished surface unless otherwise specified by the purchaser.

Copyright American Petroleum Institute

7.6 Components

7.6.1 Plates shall conform to the following:

a) the thickness of heat transfer plates after being pressed shall be sufficient to meet design conditions including suitability for handling without damage and to limit the risk of misalignment from plate deformation. The nominal thickness before pressing shall not be less than 0.5 mm (0.02 in.). See A.3.4 for additional information on minimum heat transfer plate thickness;

b) the heat transfer plates shall be fully supported by the carrying bar;

c) the heat transfer plates shall be suitable for the design conditions without the need of additional stiffeners attached to the heat transfer plate, unless approved by the purchaser;

d) pass plates shall be sufficient to withstand the total allowable stream pressure drop and may be provided with reinforcement where necessary;

e) the wetted surfaces of pass plate reinforcements shall be of the same material as the heat transfer plates;

f) all heat transfer plates, or semi-welded heat transfer plate pairs, shall have permanently stamped identification for proper assembly;

g) end plates may be reinforced with stiffeners or added thickness, when necessary, for vacuum or other design conditions.

7.6.2 Fixed and movable covers shall conform to the following:

a) stiffeners shall not be used on covers unless approved by the purchaser;

b) covers shall be furnished with slotted holes for tie bolts. The design shall mechanically restrain the tie bolts or nuts from turning;

c) The movable cover shall be suitable for the live loads that will occur when being moved for maintenance;

d) For additional guidance on covers see A.3.5.

7.6.3 Tie bolts and nuts shall conform to the following:

a) the nominal diameter of tie bolts shall be at least 16 mm ($^5/_8$ in.);

b) each tie bolt shall have one captive nut and at least one running nut. The thickness of each nut shall be greater than or equal to that of a heavy hexagonal type;

c) hardened steel washers shall be provided under all rotating nuts;

d) each tie bolt shall be supplied greased and with plastic sleeves over entire length, to protect it from the environment, with adequate clearance for sleeves between end plates for plate pack compression.

7.6.4 The carrying bar shall conform to the following:

a) the bearing surface shall permit easy sliding of the heat transfer plates and movable cover along the entire length of the carrying bar;

b) the carrying bar shall be designed to support at least 1.5 times the total mass of the movable cover and plate pack with the maximum number of heat transfer plates filled with water, or the process fluid if its density is greater than that of water. See A.3.6 for additional information on carrying bar safe loading.

Copyright American Petroleum Institute

c) the carrying bar, guide bar and heat transfer plates shall be designed to limit the lateral and vertical movement of the plate pack to align the gaskets and prevent snaking of the plate pack.

7.6.5 A support column shall be provided with a mounting foot located at the movable cover end. A minimum of two mounting feet shall be provided at the fixed cover. The design of the supports shall consider all applicable external loads specified; including wind, seismic and nozzle loads.

[•] **7.6.6** If specified by the purchaser, plate-and-frame heat exchangers shall be equipped with a shroud to protect against spray leaks.

[•] **7.6.7** If specified by the purchaser, a suitable fire protection shroud shall be provided. The level of protection shall be specified by the purchaser. See A.3.7 for additional guidance on fireproof shrouds.

[•] **7.6.8** If specified by the purchaser, the exchanger shall be equipped with a drip tray which shall have a minimum of 5 mm ($^1/_4$ in.) clearance between the bottom of the plate pack and the top of the drip tray. The tray shall be a minimum of 25 mm (1 in.) deep and fitted with a threaded and plugged drain located as close as possible to the bottom edge of tray. The tray shall be 50 mm (2 in.) minimum wider and longer than the footprint of the plate pack with the maximum number of heat transfer plates. The dimensions of the drip tray shall be agreed upon between the manufacturer and purchaser where the above dimensions are not achievable.

7.6.9 All units shall have two grounding lugs, one connected at each end of the frame.

7.6.10 The plate-and-frame heat exchanger shall be provided with suitable lifting lugs or similar devices. The design of the lifting devices shall be based on at least two times the mass of the heat exchanger at maximum heat transfer plate capacity.

7.7 Connections

7.7.1 Connections shall be either studded or flanged design. For flanged designs, the attachment of the nozzle neck to the cover shall be welded. Typical connection geometries are shown in Figure 4. The examples shown are not to be construed as preferred types and actual geometries should be agreed with the purchaser.

Copyright American Petroleum Institute

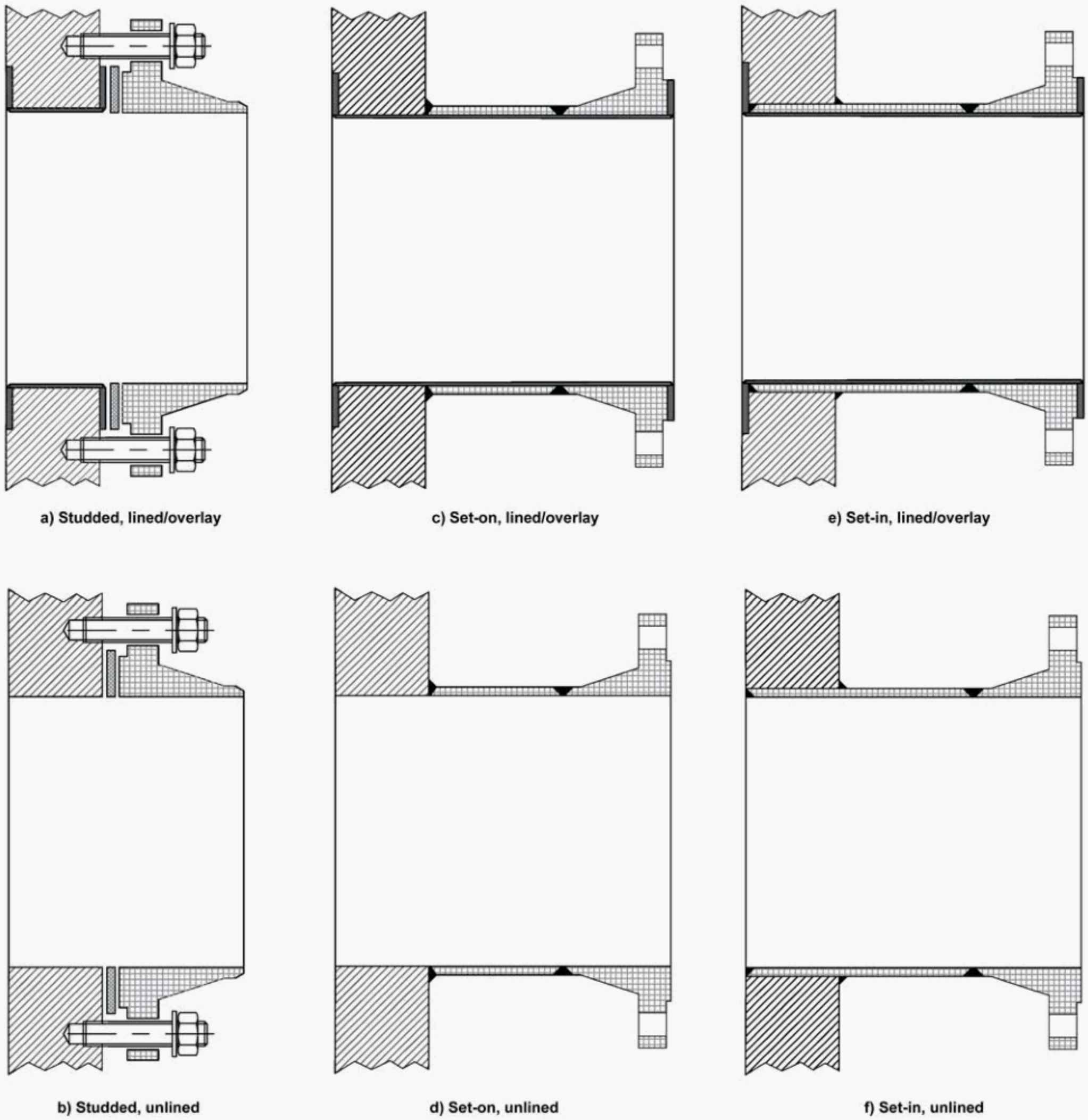

NOTE Mating flange shown in a) and b) is by others.

Figure 4—Typical Connection Geometries

[•] **7.7.2** The use of studded or flanged connections shall be specified by the purchaser and included on the datasheet. The purchaser shall specify the required flange design code, e.g. ASME B16.5.

[•] **7.7.3** The flange gasket facings or the studded port liner facings, shall be specified by the purchaser and included on the datasheet.

7.7.4 Where flanged connections are used, a weld neck flange type shall be used.

7.7.5 Slip-on or lap joint connections may only be used if agreed by the purchaser, but shall not be used in cyclic, sour, or wet hydrogen sulfide service.

Copyright American Petroleum Institute

7.7.6 The liner may be fabricated by welding or by forming. Lined connections shall not be used in cyclic services, unless approved by the purchaser.

[•] **7.7.7** For nozzles welded to cover plates, the purchaser shall specify whether the nozzles shall be set-on or set-in. They shall conform to the following:

a) For set-on nozzles, full penetration welds shall be used.

b) For set-in nozzles, the nozzle shall be attached with fillet and/or groove welds on the inside and outside of the end cover.

c) Set-in nozzles with fillet weld attachments shall not be used in cyclic service.

7.7.8 Drilled and tapped holes for studded connection bolts shall provide a minimum thread engagement per the design code. The threaded holes shall not pass completely through the cover plate unless approved by purchaser. When through holes are provided, the threaded length shall be such that the stud will not protrude from the back side of the cover.

7.7.9 For single pass arrangements, the plate-and-frame heat exchanger shall be drainable and ventable through the process connections. For multi-pass units, pass plates shall be provided with drain holes.

NOTE The unit will not be completely vented or drained and residual fluids will still be present.

7.7.10 When a reducer is used at nozzle connections, they shall be the eccentric type to allow for venting and draining.

7.7.11 The use of solid alloy nozzles in lieu of lined connections is subject to the approval of the purchaser.

7.7.12 For alloy-lined connections, the nominal thickness of the lining shall not be less than 1 mm (0.04 in.).

[•] **7.7.13** For alloy lined flanged connections the purchaser shall specify if a threaded tell-tale hole shall be provided on the bottom of the nozzle neck. See A.3.8 for additional guidance on tell-tall holes.

7.7.14 The projection of flanged connections shall allow through-bolting to be removed from either side of the flange without removing the insulation (if applicable).

7.7.15 All bolt holes for connections shall straddle centerlines.

7.7.16 Connection sizes of DN 32 (NPS 1 $^1/_4$), DN 65 (NPS 2 $^1/_2$), DN 90 (NPS 3 $^1/_2$) or DN 125 (NPS 5) shall not be used.

7.7.17 Process connections located on the fixed cover shall be designed to withstand the simultaneous application of forces (F) and moments (M) in the corroded condition and applied at the nozzle neck to fixed cover interface, as defined in Figure 5, and listed in Table 1, unless otherwise specified by the purchaser. Nozzles located on movable covers cannot withstand the same loadings as applied to the fixed cover; allowable loads for these nozzles are to be agreed upon by the purchaser and vendor. Non-piped auxiliary connections, such as vents, drains, and cleaning connections, are excluded from this requirement. See A.3.9 for additional guidance on nozzle loading.

NOTE Some pressure design codes may require that the published pressure-temperature rating be reduced for standard nozzle flanges (e.g. ASME B16.5 and ASME B16.47) in consideration of the applied piping forces and moments. This should be considered when selecting the appropriate flange rating to be applied.

Copyright American Petroleum Institute

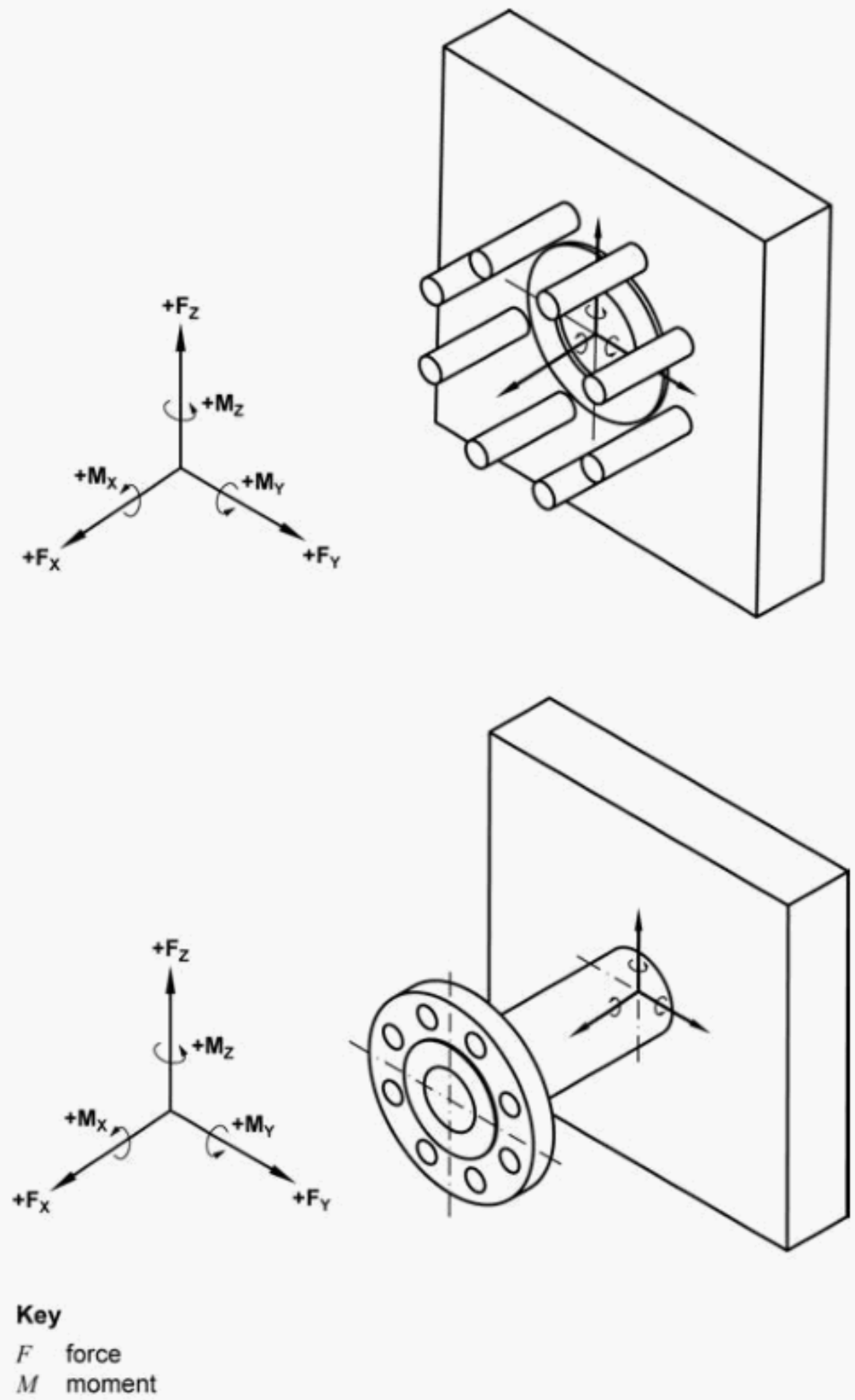

Figure 5—Directions of Forces and Moments on Connections

Table 1—Allowable Forces and Moments on Connections at the Fixed Cover

Nominal Size		PN 20 (ASME Rating 150)				PN 50 (ASME Rating 300)			
		F		*M*		*F*		*M*	
DN	(NPS)	N	(lbf)	N•m	(lbf•ft)	N	(lbf)	N•m	(lbf•ft)
≤ 50	≤ (2)	416	(93)	151	(111)	547	(123)	161	(118)
80	(3)	730	(164)	459	(339)	961	(216)	492	(363)
100	(4)	955	(215)	715	(527)	1,256	(282)	775	(572)
150	(6)	1,553	(349)	1,500	(1,106)	2,043	(459)	1,680	(1,239)
200	(8)	2,192	(493)	2,471	(1,823)	2,885	(649)	2,863	(2,111)
250	(10)	2,866	(644)	3,619	(2,669)	3,771	(848)	4,334	(3,197)
300	(12)	3,568	(802)	4,941	(3,645)	4,694	(1,055)	6,112	(4,508)
350	(14)	4,292	(965)	6,441	(4,750)	5,647	(1,270)	8,216	(6,060)
400	(16)	5,038	(1,133)	8,120	(5,989)	6,629	(1,490)	10,666	(7,867)
450	(18)	5,803	(1,305)	9,986	(7,365)	7,635	(1,716)	13,485	(9,946)

Copyright American Petroleum Institute

Table 1—Allowable Forces and Moments on Connections at the Fixed Cover (Continued)

Nominal Size		PN 20 (ASME Rating 150)				PN 50 (ASME Rating 300)			
		F		*M*		*F*		*M*	
DN	(NPS)	N	(lbf)	N•m	(lbf•ft)	N	(lbf)	N•m	(lbf•ft)
500	(20)	6,585	(1,480)	12,043	(8,882)	8,664	(1,948)	16,693	(12,312)

NOTE The data above are based on the following equations:

$$F = \frac{(7.5 \times DN^{1.2}) + (0.1 \times PN \times DN^{1.2})}{2.5}$$

$$M = \frac{4(DN\text{-}25)^{1.4} + [(2 \times 10^{-5})PN \times DN^{2.7}]}{2.5}$$

where

$F = F_x = F_y = F_z$ and $M = M_x = M_y = M_z$

7.8 Plate Gaskets

7.8.1 Gaskets shall be positioned in the grooves around the heat transfer surface and around the port holes of the heat transfer plates as indicated in Figure 6. The gaskets shall be supported in the gasket groove(s) of the plates such that they are in full contact with the bottom of the groove and are supported on both sides to resist lateral displacement prior to and during gasket compression.

7.8.2 Gaskets shall be secured to the heat transfer plates by glue, adhesive tape or by mechanical means. See A.3.10 for additional information on the use of glued and glue-free gasket fixing.

7.8.3 Gaskets shall be compressed to achieve metal-to-metal contact between plates.

7.8.4 Each sealing gasket shall be one integral piece. The use of multi-piece gaskets is subject to the approval of the purchaser. For semi-welded heat transfer plates, multi-piece end plate gaskets and separate port gaskets may be used. For further information on the use of multi-piece gaskets see A.3.10.5.

7.8.5 Through-flow port areas of the heat transfer plates shall be double-gasketed and vented to the atmosphere such that cross-contamination of fluids cannot occur without readily detectable external evidence. For one-piece gaskets the vent shall be provided by a recess section of gasket and not a break. See Figure 6.

7.8.6 When the gasket material has not been specified by the purchaser, the vendor shall recommend a gasket material for the purchaser's acceptance and approval based on the operating conditions and fluid compositions. The purchaser shall specify the compositions of the fluids, including any trace components which may affect the gasket selection, as well as any alternate operating conditions (e.g. chemical cleaning, flushing, or upset operation) which are to be considered. For further information, see A.3.10.6.

Copyright American Petroleum Institute

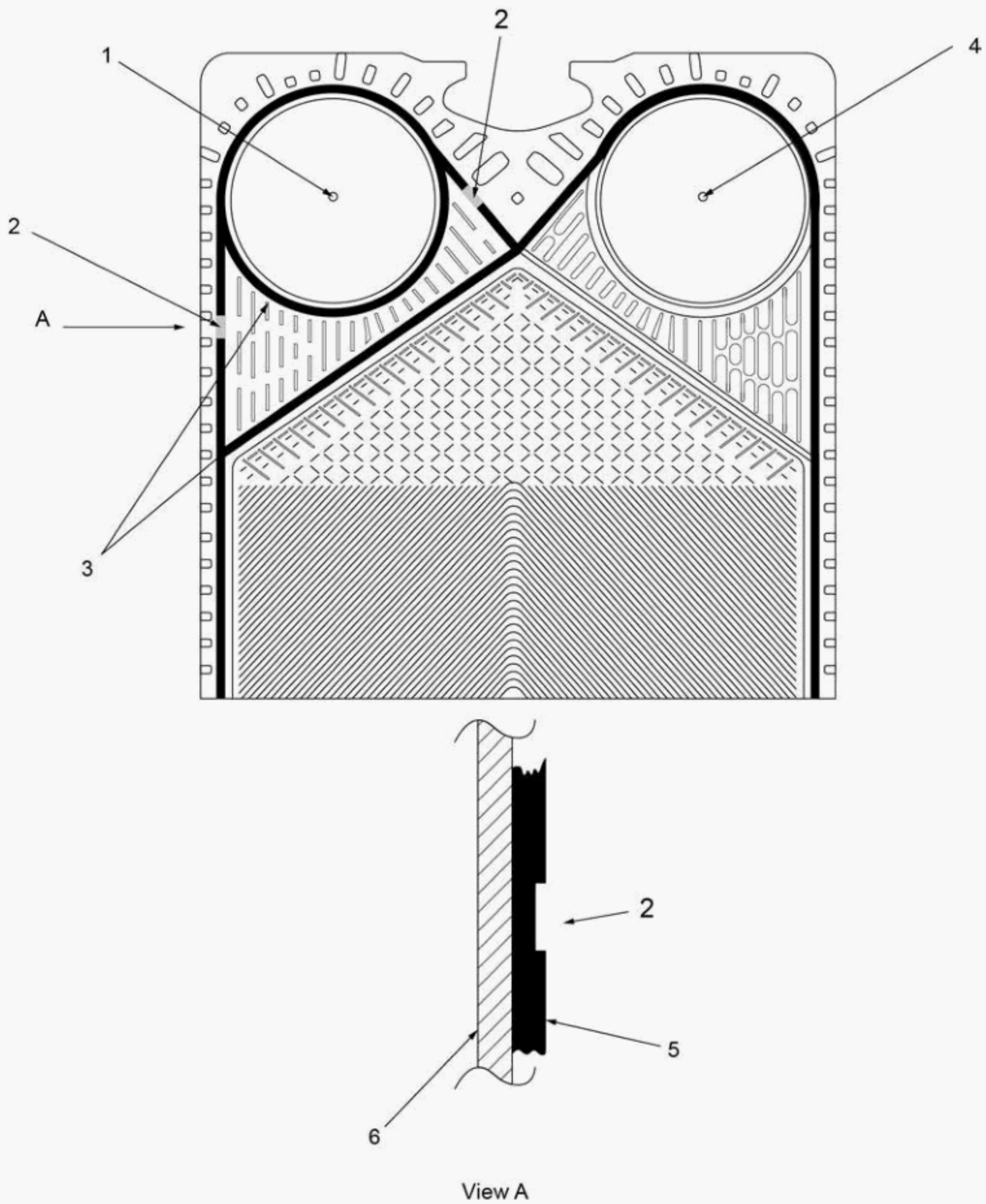

Key

1 through flow port
2 leakage vent (reduced height gaskets)
3 double gaskets
4 port hole
5 will be gasket
6 will be heat transfer plate

Figure 6—Typical Heat Transfer Plate Gasket

8 Materials

8.1 General

8.1.1 All pressure-containing parts of carbon steel plate shall be fully killed, and unless otherwise approved by the purchaser shall have a fine austenitic grain size.

Copyright American Petroleum Institute

8.1.2 Material for external parts that are welded directly to the pressure parts (such as lifting lugs, clips and supports) shall be of the same nominal composition as the material to which they are welded, except for grounding lugs and nameplates.

8.1.3 The heat transfer plate-contact surface of the guide bar and carrying bar shall be austenitic stainless steel.

8.1.4 All nameplates shall be austenitic stainless steel.

8.2 Requirements for Carbon Steel in Sour or Wet Hydrogen Sulfide Service

8.2.1 Materials shall be supplied in the normalized condition. The acceptability of hot-formed material shall be subject to approval of the purchaser.

8.2.2 Pressure-retaining components shall be supplied with a Material Test Report (MTR). The MTR shall include the unspecified elements chromium (Cr), columbium (Cb) [also known as niobium (Nb)], nickel (Ni), vanadium (V), molybdenum (Mo), and copper (Cu) that are used in the formula to calculate the carbon equivalent (CE) as defined by NACE MR0175 (all parts) or NACE MR0103.

[•] **8.2.3** The maximum allowable carbon equivalent shall be agreed with the purchaser prior to purchase of materials. The purchaser shall specify any other restrictions on residual elements or micro-alloying elements which may apply depending on the severity of the service.

9 Fabrication

9.1 Welding

9.1.1 All pressure-containing welding shall be in accordance with the pressure design code. Structural welding shall be in accordance with the structural welding code, unless otherwise specified by the purchaser.

9.1.2 Semi-welded heat transfer plate pairs shall be laser welded unless otherwise agreed between vendor and purchaser in accordance with the pressure design code. See A.4.1 for additional information on semi-welded heat transfer plate welding.

9.1.3 Welds for attachments (such as lugs or structural steel supports) shall be continuous, except when approved by the purchaser.

9.1.4 Repair-associated welding procedures shall be submitted to the purchaser for review before the start of the repair.

9.1.5 For carbon steel welds, whether lined or unlined, in sour or wet hydrogen sulfide service, procedure qualifications shall include a micro-hardness survey performed on a weld cross-section, including the heat-affected zone, and transverse to the weld centerline. The micro-hardness testing and acceptance criteria shall be in accordance with NACE SP0472 or NACE MR0175 (all parts), as applicable.

9.2 Plate Gasket Installation

9.2.1 Gasket sealing surfaces of the heat transfer plates shall be clean and free from oil, grease and all other contaminants prior to gasketing.

9.2.2 All glued gaskets shall be visually checked for deformation after curing. A sample pull test shall be performed to verify the adhesion strength after curing; the sample size and acceptance criteria is to be agreed by the purchaser. All deformed or loose gaskets shall be replaced and cured again.

9.2.3 All clip-on gaskets shall be visually inspected after installation.

Copyright American Petroleum Institute

9.3 Assembly

Each component shall be clearly and permanently identified for proper assembly in accordance with the detailed assembly instructions. See A.4.2 for additional information on assembly, including the importance of installation procedures.

10 Inspection and Testing

10.1 Quality Control

[•] **10.1.1** The purchaser shall specify any requirement, and extent of, nondestructive testing of the heat transfer plates after forming, such as a light box test, liquid penetrant testing, helium leakage testing, or alternate means.

10.1.2 For semi-welded heat transfer plate pairs the gasket seating area shall be visually examined after welding and cleaned of any weld splatter that may affect gasket seating.

[•] **10.1.3** For semi-welded heat transfer plate pairs the purchaser shall specify the need for nondestructive testing of the welds by vacuum leak test, gas leak test, or eddy current test methods. When performed, this test may satisfy the requirements as specified in 10.1.1 (if applicable).

10.1.4 If set-on connections are used, the edge of the hole in the plate to which the connections are attached shall be examined for laminations by the magnetic-particle or liquid-penetrant method prior to and after completion of welding, and post weld heat treatment if applied. Indications found shall be cleared to sound metal and then back-welded.

[•] **10.1.5** If specified by the purchaser, after welding of set-on connections, ultrasonic examination of the attachment welds and the cover shall be completed for at least 50 mm (2 in.) from the connection to the extent possible. The acceptance criteria shall be agreed by the purchaser and the vendor.

[•] **10.1.6** The purchaser shall specify whether all carbon steel plate in sour or wet hydrogen sulfide service shall be subjected to an ultrasonic lamination check (e.g. to EN 10160 grade S2E2 or ASTM A578/578M, acceptance level A supplementary requirement S1).

10.1.7 In sour or wet hydrogen sulfide service, all accessible finished carbon steel welds and heat affected zones shall be examined on the process side by the wet-fluorescent magnetic particle method prior to lining (if applicable).

10.1.8 For pressure containing welds inspection and testing shall be performed in accordance with the pressure design code. The following additional requirements apply:

a) At least one spot-radiograph shall be made of each accessible butt-welded joint.

b) Weld porosity limits for spot radiographs shall be as stated in the pressure design code for fully radiographed joints.

10.1.9 Welds in liners shall be liquid-penetrant examined.

10.1.10 Production weld hardness testing of pressure retaining welds shall be in accordance with the pressure design code, or the following requirements, whichever is the more stringent:

a) Welds in components made of carbon steel shall be hardness tested. Hardness testing of the heat affected zone shall be conducted if required by the pressure design code, or when specified by the purchaser.

b) If post weld heat treatment is required, examination shall be made after the post-weld heat treatment is completed.

Copyright American Petroleum Institute

c) Unless otherwise agreed between the vendor and purchaser, the weld hardness for carbon steel shall not exceed 225 HBW.

d) For carbon steel welds, whether lined or unlined, in sour or wet hydrogen sulfide service, production weld hardness shall be in accordance with NACE MR0175 (all parts) or NACE MR0103, as applicable.

e) Hardness readings shall be taken with a portable Brinell hardness tester. Other hardness testing techniques can be employed if approved by the purchaser. When access is available, tests shall be performed on the side of the weld in contact with the process fluid.

f) All connection-to-component welds DN 50 (NPS 2) or larger, shall be tested.

10.1.11 When weld deposit overlay is applied on pressure retaining components, production weld chemistry tests shall be performed at the specified depth as follows:

a) Weld overlay test samples (including weld overlay restoration) shall be taken at a depth of at least 1.5 mm ($^{1}/_{16}$ in.) from the finished surface, unless otherwise specified by the purchaser.

b) When weld overlay is applied on nozzle assemblies, at least one deposit analysis shall be made for each welding procedure used. Where multiple nozzle assemblies are manufactured with the same welding procedure, the deposit analysis shall be taken from the smallest diameter nozzle manufactured for each welding procedure.

c) Production test locations shall be restored after testing.

10.2 Hydrostatic Testing

10.2.1 The hydrostatic test shall be separately applied to the hot side and to the cold side with atmospheric pressure on the other side, in addition to a test with both sides simultaneously pressurized.

10.2.2 Each hydrostatic test shall be maintained for not less than 30 min after pressure stabilization.

10.2.3 For each hydrostatic test, two indicating gauges per side (or one indicating gauge and one recording gauge) shall be attached to the plate-and-frame heat exchanger.

10.2.4 The water used for hydrostatic testing shall be potable.

10.2.5 The minimum water temperature for hydrostatic testing shall be 7 °C (45 °F).

10.2.6 The chloride content of the test water used for equipment with austenitic stainless steel materials that would be exposed to the test fluid, shall not exceed 50 mg/kg (50 parts per million by mass). Upon completion of the hydrostatic test, the equipment shall be promptly drained and cleared of residual test fluid.

10.2.7 At the discretion of the vendor and subject to the approval of the purchaser, a pneumatic test may be used in lieu of hydrostatic test for the welded side of semi-welded units to avoid complications with complete dry out of the welded chambers. Procedures, addressing both the application and safety concerns of pneumatic testing, shall be agreed between the purchaser and the vendor.

[•] **10.2.8** Any additional requirements for equipment drying or preservation shall be specified by the purchaser. See A.5 for additional information.

[•] **10.2.9** Purchaser shall specify if paint or other coatings may be applied over welds, and any installed liners, prior to the final pressure test. See A.6 for additional information.

10.3 Nameplates

10.3.1 A nameplate shall be permanently attached to the fixed cover of the plate-and-frame heat exchanger.

Copyright American Petroleum Institute

10.3.2 Standard nameplate data shall include:

a) vendor's name and plate-and-frame heat exchanger serial number;

b) purchaser's item number;

c) year built;

d) pressure design code and, if required, code stamping;

e) maximum design temperature and minimum design metal temperature;

f) maximum design pressure and, if applicable, vacuum;

g) hydrostatic test, and

h) mass (empty).

11 Preparation for Shipment

11.1 The plate-and-frame heat exchanger shall be cleaned, and all openings sealed before shipment.

11.2 All liquids used for cleaning or testing shall be drained from plate-and-frame heat exchangers before shipment. See A.5 for additional information.

11.3 The plate-and-frame heat exchanger shall be free of foreign matter prior to shipment.

11.4 Exposed flanged connections shall be protected by either of the following:

a) gasketed steel covers fastened by the greater of:

— 50 % of the required flange bolting, or

— four bolts.

b) commercially available plastic covers specifically designed for flange protection.

11.5 All flange-gasket and exposed machined surfaces shall be coated with an easily removable rust preventative.

11.6 All threaded connections shall be protected by metal plugs or caps of compatible material.

[•] **11.7** The purchaser shall specify if there are requirements for surface preparation and protection (e.g. painting).

11.8 Exposed threads of bolts shall be protected with an easily removable rust preventative to prevent corrosion during testing, shipping, and storage.

[•] **11.9** The purchaser shall specify if inert gas (e.g. nitrogen, argon) purge and fill is required. Positive pressure shall be indicated by a pressure gage. Gages shall be suitably protected from damage during transportation. The purchaser shall maintain the positive pressure of the inert gas during storage.

11.10 When an inert gas fill is used, the vendor shall apply a label or wired metal tag on all openings that states, "Contents are under <Inert gas> pressure and must be depressurized before opening." All transport regulations must also be complied with.

Copyright American Petroleum Institute

Annex A
(informative)

Recommended Practice

A.1 General

This annex has been prepared to give advice to the designer. The advice is not mandatory and is offered for guidance only.

In this annex, the numbers after the section headings correspond to those in the main body for that subject.

A.1.1 Sour or Wet Hydrogen Sulfide Service—Guidance to 4.7 and 4.8

NACE MR0103 establishes material requirements for resistance to sulfide stress cracking (SSC) in sour petroleum refining and related process environments which contain hydrogen sulfide either as a gas or dissolved in an aqueous (liquid-water) phase, with or without the presence of hydrocarbon. SSC is defined as cracking of a metal under the combined action of tensile stress and corrosion in the presence of water and hydrogen sulfide. Other forms of wet hydrogen sulfide cracking, environmental cracking, and severely corrosive and/or hydrogen charging conditions that can lead to failures by mechanisms other than SSC are outside the scope of NACE MR0103.

The high pH environments of refinery sour service differentiate these services from oil and gas production sour environments, which are covered by NACE MR0175 (all parts), because many wet sour streams in production facilities also contain carbon dioxide and hence exhibit a lower pH. In addition, chloride ion concentrations tend to be significantly lower in refinery sour services than in oil production sour services.

NACE MR0175 (all parts) provides requirements and recommendations for the selection and qualification of metallic materials for service in equipment used in oil and gas production and natural gas sweetening plants in hydrogen sulfide containing environments. Mechanisms of cracking that can be caused by hydrogen sulfide include sulfide stress cracking, stress corrosion cracking (SCC), hydrogen-induced cracking (HIC), step-wise cracking (SWC), stress-oriented hydrogen-induced cracking (SOHIC), soft zone cracking (SZC), and galvanically induced hydrogen stress cracking.

Factors affecting the susceptibility of metallic materials to cracking in oil and gas production facilities in hydrogen sulfide containing environments include the hydrogen sulfide partial pressure, in situ pH, the concentration of dissolved chlorides or other halides, the presence of elemental sulfur or other oxidant, temperature, galvanic effects, mechanical stress and the duration of contact with a liquid water phase.

The use of loose liners by themselves are not typically considered as adequate protection of the base material against sour or wet hydrogen sulfide service. For this reason, the sour or wet hydrogen sulfide service requirements for materials, fabrication, and inspection are typically still applied to the base metal whenever loose liners are provided.

In sour or wet hydrogen sulfide service set-on connections with either long weld neck or weld neck nozzles should be used.

A.1.2 Cyclic Design—Guidance to 4.9 and 4.10

A.1.2.1 The following is guidance to assist in identifying a potential cyclic service application, where the conditions can be singular or a combination of each:

Copyright American Petroleum Institute

— 20 % variance in normal operating pressure;

— 20 % variance in process flow rate;

— variation in normal operating temperatures between steady state modes of operation exceeding 30 °C (50 °F).

One cycle is where the variance occurs in a time frame of less than 24 h and the number of cycles exceeds 12 per year.

NOTE The variation in the normal operating temperature is suggested by API RP 571 for critical factors for thermal fatigue.

A.1.2.2 The purchaser may refer to ASME *BPVC, Section VIII, Division 2*, or other pressure design codes, including EN 13445 (all parts), for additional guidance for cyclic service and fatigue analysis.

A.1.2.3 Plate-and-frame heat exchangers are not recommended for services where a fatigue analysis is necessary.

A.1.2.4 Plate-and-frame heat exchangers in cyclic service will typically exhibit gasket or liner leaks prior to fatigue failure.

A.2 Proposal Information Required

A.2.1 Thermal and Hydraulic Design—Guidance to 5.9

The thermal and hydraulic design of plate-and-frame heat exchangers is normally performed and guaranteed by the heat exchanger vendor. The empirical and semi-empirical heat transfer and pressure drop correlations used to support these designs are normally derived through proprietary research and testing programs which consider the unique heat transfer plate geometries, test fluid transport properties, and both single and two-phase methods applied.

It is possible to estimate the thermal and hydraulic performance of plate-and-frame heat exchangers using commercial software. The accuracy of such analysis may differ from the vendor's methods depending upon the specific service and specific heat transfer plate geometry each vendor may use. The methods in commercial software are typically more generalized as they are based on experimental results across multiple heat transfer plate vendors, rather than being tuned to a specific set of heat transfer plates. Additionally, commercial software may not consider specific differences between different vendor plates such as heat transfer plate distributor design.

While the purchaser should always rely on the vendor for final design, commercial software is useful for initial scoping and feasibility studies (e.g. comparison of plate-and-frame to other equipment types). It may also be used for comparing relative performance of alternative plate-and-frame designs.

When the purchaser has specified that the vendor should provide the data to allow the purchaser to perform a thermal verification, as this information may be proprietary, it may be necessary to have a non-disclosure agreement.

A.2.2 Sizing of Inlet and Outlet Ports—Guidance to 5.10 and 5.11

A.2.2.1 The total pressure drop in the inlet and outlet ports (combined) should not exceed 25 % to 30 % of the total pressure drop for each stream. Higher pressure drops in the ports will not allow for even flow distribution in each of the heat transfer plate passages. Additionally, the pressure drop allotted for each stream is more

Copyright American Petroleum Institute

effectively used to develop higher shear stress and heat transfer coefficients in each heat transfer passage rather than being consumed in the ports.

A.2.2.2 Port velocities on plate-and-frame heat exchangers are typically much higher than velocities used in tubular heat transfer equipment.

The design port velocities can be as high as 7.5 m/s (24 ft/sec) for clean liquid services. Appropriate port velocities for other services such as vapor, two-phase and liquids with solids should be agreed between the purchaser and the vendor.

A.3 Design

A.3.1 Design Temperature Effect on Gaskets—Guidance to 7.2.2

A.3.1.1 As gaskets are a critical component whose failure can lead to a loss of pressure containment, their selection should be based on the specified maximum and minimum exchanger design temperatures. These design temperatures should be specified by the purchaser and should be based on the expected range in operating temperatures, including start-up, shut-down and process upsets. The gasket should be selected for the process application and the vendor should provide details of the gasket material and operating limitations, including anticipated gasket life. The purchaser should inform the vendor of any operating, start-up, shut-down, process upsets or maintenance conditions that could influence the selection of the gaskets.

A.3.1.2 The effect of temperature on the heat transfer plate gaskets should be considered because operating gaskets at high temperatures will greatly reduce the life of the gaskets. Additionally, low gasket temperatures can increase the hardness of the gaskets which will make sealing difficult and can cause the gaskets to become brittle.

A.3.1.3 Heat exchanger vendors normally supply gaskets that will provide an adequate service life for the specified fluids at the operating temperatures provided by the purchaser.

A.3.1.4 It is important for the purchaser to consider gasket life when setting the equipment design temperature especially if considering increasing the design temperature to the limits of the flange rating or construction materials. There are many cases where these increased design temperatures exceed the temperature limit of the most effective sealing gasket material, or gasket life is reduced when exposed to higher temperatures.

A.3.1.5 The purchaser should be aware of the following gasket limitations when specifying design temperatures:

a) Depending on the grade of gasket used, prolonged operating temperatures of up to 150 °C to 180 °C (300 °F to 350 °F) are possible.

b) Generally, service life of gaskets can be doubled with each 10 °C (18 °F) reduction in exposure temperature. It is important for the operator and designer to understand the relationship between gasket life and temperature.

c) Gaskets in plate-and-frame heat exchangers undergo progressive compression set and aging during operation. Satisfactory performance should be achieved providing that the pressure and temperature changes at start-up, or other operating changes, are made gradually. The aging process of the gaskets is accelerated at higher operating temperatures.

d) At higher temperatures, some gaskets can experience “face-sticking”, where the sealing surface of the gasket physically adheres itself to the plate next to it.

Copyright American Petroleum Institute

A.3.2 Fouling Margin—Guidance to 7.4

A.3.2.1 Conventional fouling-resistance values used with shell-and-tube heat exchangers should not be used in the thermal design of plate-and-frame heat exchangers. However, some margin for performance degradation due to fouling should be taken into account in the thermal design of the unit. Recommended fouling margins for various services are included within Table A.1. The overall fouling margin to be applied should be equal to the greater of that of the individual hot and cold fluids. Where both fluids have fouling margins greater than or equal to 15 %, the overall fouling margin should be 25 %.

A.3.2.2 The fouling rate on the heat transfer surface is the difference between the deposition rate and removal rate of the foulant. Fouling can often be minimized by keeping a high fouling removal rate with higher fluid turbulence and high shear stresses on the metal walls. In plate-and-frame heat exchangers the nominal channel velocities are typically low but very high shear stresses can be achieved. The purchaser must note that adequate pressure drop needs to be available to achieve the required shear stress.

A.3.2.3 Recommended minimum wall shear-stress for various services are included in Table A.1. The minimum shear stresses should be achieved at the design operating condition. Both the shear stress and fouling margin targets should be achieved at the exchanger's design condition.

Table A.1—Recommended Targets for Fouling Margins and Wall Shear Stress

	Fouling Margin	Wall Shear Stress (Minimum)	
	%	Pa	(psi)
Demineralized water	5	—	—
Potable water	10	30	0.00435
Cooling tower water	15	50	0.00725
Dirty sea water	15	75	0.01088
Clear sea water	10	50	0.00725
Lubricating oil	10	30	0.00435
Crude oil	15	50	0.00725
Process streams, clean	10	30	0.00435
Process streams, dirty [a]	25	50	0.00725
Amine/Sulfinol solutions [b]	15	50	0.00725
Steam	5	—	—
Glycol/water solutions	10	30	0.00435
Condensing process streams	10	—	—
Evaporating process streams	[c]	[c]	
Refrigerant—all phases	5	—	—-

[a] If the shear stress for the process fluid can achieve 75 Pa (0.01088 psi) the fouling margin may be reduced to 20 %.

[b] Rich amine streams which are subject to vapor break-out should use the shear stress indicated for the all-liquid region.

[c] To be agreed between the purchaser and vendor.

A.3.2.4 The actual wall shear stress is unknown because of the presence of eddies away from the heat transfer plate wall. The following formula provides an estimate of the wall shear stress. Shear stress values calculated by commercially available software may vary from this calculation method. Purchasers should consult with the vendor for the calculated value of the shear stress. See Figure 1 and Figure 2 for diagrammatic view of terms used. Two worked examples are included in Table A.2, one in SI and the other in U.S. customary units.

The basic relationship for shear stress is:

Copyright American Petroleum Institute

Shear stress = Velocity head * Fanning Friction Factor

$$S = \frac{dP \times de}{4 \times L} \tag{A.1}$$

$$L = \frac{a}{w} \tag{A.2}$$

$$de = \frac{2b}{X} \tag{A.3}$$

$$a = \frac{A}{(2 \times Np \times Nch) - 1} \tag{A.4}$$

where

a	is the single plate's heat transfer area [m² (ft²)]
A	is the total heat transfer area [m² (ft²)]
b	is the height to the underside of a corrugation of a heat transfer plate, or ($p - t$) (See Figure 2) [mm (in.)]
de	is the hydraulic diameter [mm (in.)]
dP	is the channel pressure drop in the pass being analyzed, excludes port pressure drop [kPa (psi)]
L	is the developed heat transfer length of a channel [m (ft)]
Nch	is the number of flow channels per pass for each fluid
Np	is the number of passes
p	is the heat transfer plate pitch when compressed (See Figure 2) [mm (in.)]
S	is the shear stress [Pa (psi)]
t	is the heat transfer plate thickness [mm (in.)]
w	is the channel flow width [mm (in.)]
X	is the enlargement factor that increases the heat transfer surface area for the plate corrugations when compared with a flat surface. It is typically between 1.14 to 1.25 and is dependent on the specific heat transfer plate being used. If the actual factor is not known, a value of 1.17 may be used as an approximation.

NOTE Port pressure drop is not easily estimated, this value needs to be supplied by the vendor or by software.

Based on the above equations, shear stress equation can be expressed as:

$$S = C \times \left[\frac{dP \times (p - t) \times w}{2 \times a \times X}\right] \tag{A.5}$$

where

Constant C = 10^{-3}, for SI units

= 6.94×10^{-3}, for U.S. customary units

Copyright American Petroleum Institute

Table A.2—Wall Shear Stress Two Worked Examples

SI units	U.S. customary units
Given parameters (by vendor): Total number of passes: 3 t = 0.5 mm P = 4.0 mm w = 500 mm a = 1.0 m² Port pressure drop = 21 kPa Total pressure drop = 120 kPa X = 1.17 (suggested value if not given)	Given parameters (by vendor): Total number of passes: 1 t = 0.0236 in. P = 0.201 in. w = 14.3 in. a = 3.55 ft² Port pressure drop = 0.058 psi Total pressure drop = 1.91 psi X = 1.17 (suggested value if not given)
dP = (total pressure drop – port pressure drop) number of passes dP = (120 – 21) / 3 = 33 kPa	dP = (total pressure drop – port pressure drop) number of passes dP = (1.91 – 0.058) / 1 = 1.85 psi
$S = C \times \left[\frac{dP \times (p - t) \times w}{2 \times a \times X}\right]$	$S = C \times \left[\frac{dP \times (p - t) \times w}{2 \times a \times X}\right]$
$S = 1 \times 10^{-3} \times \left[\frac{33 \times (4.0 - 0.5) \times 500}{2 \times 1.0 \times 1.17}\right]$	$S = 6.94 \times 10^{-3} \times \left[\frac{1.85 \times (0.201 - 0.0236) \times 14.3}{2 \times 3.55 \times 1.17}\right]$
S = 24.7 Pa	S = 0.00392 psi

A.3.2.5 The purchaser should consider installing strainers upstream of the plate-and-frame heat exchanger to limit particulates to no more than 25 % of the plate gap, or as recommended by the vendor.

A.3.3 Corrosion Allowance—Guidance to 7.5

By the nature of their design with respect to formability and heat transfer function, the heat transfer plates are supplied in thicknesses that are typically less than 1 mm ($^1/_{32}$ in.). For this reason, the material specified for these plates must be chosen such that the anticipated corrosion rate for the fluids contained and at the conditions of operation is negligible in order to ensure equipment performance and pressure integrity.

A.3.4 Pack Stability—Guidance to 7.6.1 Item a)

Conditions that may have detrimental impact on the stability of the plate pack alignment are as follows:

a) Large heat transfer plates e.g. with a face area (W × H) greater than 1.4 m² (15 ft²).

b) Plate packs with a large number of heat transfer plates, e.g. greater than 300.

c) Titanium and other low strength material heat transfer plates.

d) Specified gaskets with hardness greater than 85 IRHD.

e) Units that are subjected to frequent disassembly, e.g. more than once per year.

For these cases, the plate pack stability can be improved by increasing the thickness (before pressing) of the individual heat transfer plates. Experience has shown that an increase from 0.5 mm to 0.6 mm (0.0197 in. to 0.0236 in.) thickness is sufficient in many cases. In extreme cases an increase to 1.0 mm (0.04 in.) heat transfer plate thickness can be required.

Copyright American Petroleum Institute

A.3.5 Covers—Guidance to 7.6.2

Single-pass plate-and-frame heat exchangers should have all connections located in the fixed cover in order to ease maintenance and allow the unit to have additional heat transfer plates added.

If nozzles are located on the movable cover, the design should use piping spools which allow for the retraction of the movable cover for maintenance and future addition of new heat transfer plates.

A.3.6 Carrying Bar—Guidance to 7.6.4 Item b)

A safe loading ratio for the carrying bar accounts for additional loadings such as those resulting from particulate or fouling deposits.

A.3.7 Fireproof Shroud—Guidance to 7.6.7

A.3.7.1 A fireproof shroud should:

a) be readily removable and replaceable for maintenance;

b) provide convenient access for observation, and;

c) be fitted with a suitable vent connection.

A.3.7.2 If a fireproof shroud is required, a satisfactory type test should conform to the following:

a) type-tested on a plate-and-frame heat exchanger which contains kerosene under pressure with no flow;

b) type-tested at a commercial size and possesses a minimum of 100 heat transfer plates;

c) demonstrate by test the ability to limit the leakage to no more than 4 l/min (1 gpm) at design pressure or 1000 kPa (ga) (150 psig) minimum, while exposed to a hydrocarbon-spill fire. The test duration should be at least 1 h. The fire should envelop the unit on all sides, with flame temperatures sustained above 760 °C (1400 °F). Temperature readings at the plate pack should be taken for information.

A.3.8 Tell-tale Hole—Guidance to 7.7.13

A threaded tell-tale hole can be used to provide a visual indication of leakage past the liner. They should be considered for process services in which rapid corrosion of the base metal can occur if exposed to the process fluid. When used, the size of the hole should be in accordance with the pressure design code, and the hole should be plugged prior to shipment. The plug should be removed after installation of the exchanger and fitted with a vent tube, if necessary, to allow for leakage to be detected from the outside of any insulation.

A.3.9 Nozzle Loading—Guidance to 7.7.17

A.3.9.1 The actual nozzle loads from attached piping are seldom defined at the time of order placement. In addition, the allowable nozzle loads for plate-and-frame heat exchangers are generally lower than the calculated loads for pipe or piping flanges. It is desirable in the design stage that the plate-and-frame heat exchanger vendor and piping designers work on agreed levels of nozzle loadings that can be taken by the plate-and-frame heat exchanger. When actual piping nozzle loads become available, these should be submitted to the vendor to confirm their acceptability.

Copyright American Petroleum Institute

A.3.9.2 Nozzle loads affect nozzle attachment design, size of the plate-and-frame heat exchanger's anchor bolts, and the design of the covers and carrier rails; consequently, excessive loads should not be specified. The nozzle loads and moments given in this document are suitable for normal applications. Plate-and-frame heat exchangers located in offshore structures or pre-assembled modules are usually required to withstand higher nozzle loadings than other facilities in which more flexible piping layouts are economical.

A.3.10 Plate Gasket Fixing—Guidance to 7.8

A.3.10.1 A correctly designed gasket must exert a minimum sealing force to prevent leakage, while at the same time avoiding high forces which can result in damage to the gasket and gasket grooves. To obtain optimum performance, it is important that the heat transfer plate and gasket are designed together. Gasket profiles should be matched to the heat transfer plates that they are intended to be used on. A “one size fits all” philosophy adds risks to the design with respect to premature leakage, gasket damages or misaligned plate packs. The tolerances for the gasket widths and other gasket properties like hardness etc. are proprietary information of the vendor.

A.3.10.2 The purchaser should specify the composition of the process and/or utility fluids so that a proper gasket selection can be made. Particular attention should be paid to those constituents which are known to affect the suitability of elastomeric gasket materials including petroleum based fluids, acids, bases, ketones, solvents, ammonia, amines, hydrogen sulfide, as well as chlorinated, aromatic and nitro hydrocarbons. Consideration should be given to constituents which may be present during upset conditions or alternate operating conditions (e.g. chemical cleaning or flushing operations), as well as the operating temperatures during such operations.

A.3.10.3 The vendor should recommend a gasket material for the approval of the purchaser based on either previous acceptable experience in similar applications, or through the consultation of elastomeric gasket vendors and published chemical compatibility data, for the gasket material and fluid combinations.

A.3.10.4 When no previous acceptable experience or gasket compatibility data exists, the proposed gasket should be subjected to an immersion test to measure gasket swelling, hardness and susceptibility to chemical attack. The test should be conducted at the anticipated operating temperature with a piece of the specified gasket material. The testing should be done with a sample of the process/utility fluid supplied by the purchaser, if available. If a sample of the fluid cannot be supplied, the purchaser and vendor may agree on a test fluid composition to be used that will provide for suitable accuracy for gasket selection. The test method should be in accordance with ASTM D471, *Standard Test Method for Rubber Property – Effect of Liquids*, and ISO 1817, *Rubber, vulcanized or thermoplastic – Determination of the effect of liquids*.

The test method procedure, its duration and acceptance criteria, should be agreed by the purchaser and vendor. When no other criterion is available the following have been found suitable for most situations:

a) the typical duration of the test as one to two weeks;

b) a nominal gasket thickness comparable to that to be used within the unit;

c) the gasket hardness change should not exceed 10 IRHD (international rubber hardness degree);

d) volume change should not exceed 15 %.

A.3.10.5 The use of multi-piece gaskets in different materials should be avoided due to the risk that each piece can have a different compressibility, and this can result in leakage. There can also be variations in shelf life which can impact on the gasket's physical properties. However, when the fluids in a plate-and-frame heat exchanger require different gasket materials it is then acceptable to use separate gaskets for the ports. Figure A.1 shows a typical configuration for these cases.

Copyright American Petroleum Institute

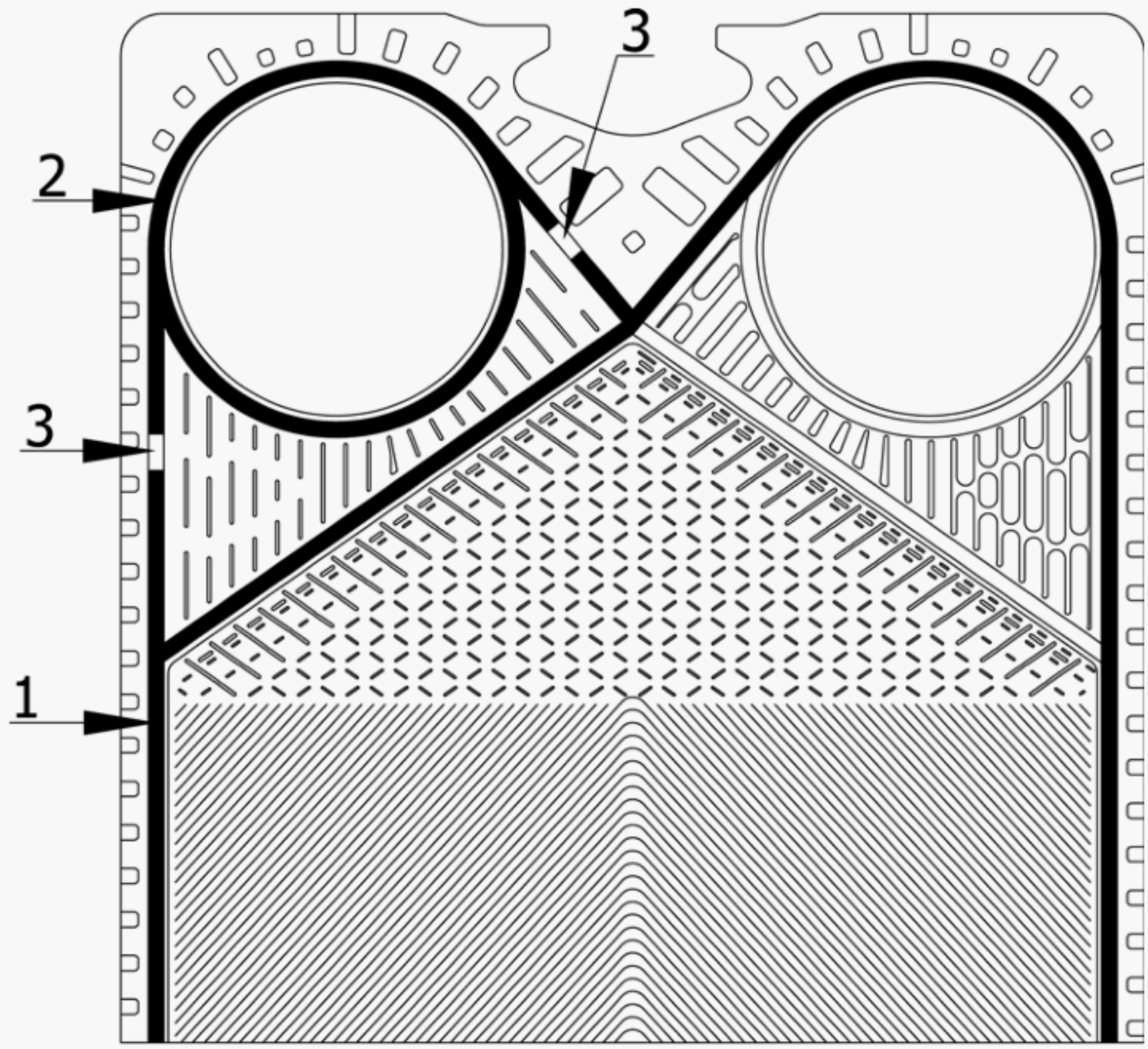

Key

1 body gasket
2 port gasket
3 gap between the body and port gaskets, which also serves as a vent

Figure A.1—Typical Configuration with Separate Port Gasket Material

A.3.10.6 Suitability of both gasket materials to the process fluid should be considered in case fluid seepage past the port gasket causes the heat transfer plate gasket to be wetted by an incompatible fluid and vice versa. Although fluid cross-contamination will not occur due to having leakage vents between the port and heat transfer plate gaskets, it is possible for the other gasket material to be wetted by the leaking fluid and affect gasket life in cases of severe incompatibility. See 7.8.6.

A.3.10.7 The following guidance and discussion is on the use of glue-free gaskets compared with glued-on gaskets:

a) Glued gaskets, including adhesive tape, advantages include:

1) if the unit is required to be opened and cleaned frequently. Gluing the gaskets to the heat transfer plate can be helpful during frequent disassembly for cleaning as the gaskets will generally stay affixed to the plates during hydro-blasting. There is, however, a practical limit to how often even a glued gasket system should be opened, hydro-blasted, reclosed and retightened before gasket damage will result in an incremental loss in sealing forces and require gasket replacement;

2) improved resistance to gasket displacement when subjected to upset process conditions;

3) if there is a risk of swelling of the gasket material from a chemical component in the process stream as it helps to retain the gasket shape;

Copyright American Petroleum Institute

4) if there is a risk of contamination by particulates as these could become wedged between the gasket grooves.

b) Glue-free gaskets advantages include:

1) easier serviceability and elimination of shipping/handling of adhesives;

2) when the glue materials are not compatible with the process fluids involved;

3) in high temperature applications [over 140 °C (280 °F)], a glued gasket can be more likely to experience a crushing effect, especially if using crush-sensitive materials (e.g. hydrogenated nitrile butadiene rubber);

4) in remote areas where maintenance challenges create the need for quick turnaround for servicing the units or where the unit cannot be removed from the site.

A.3.10.8 Gluing technique is very important and use of reliable gluing systems are required especially if the heat transfer plates are to be cleaned using hydro-blasting.

A.4 Fabrication

A.4.1 Welding—Guidance to 9.1.2

The weld between heat transfer plates that is used to produce a semi-welded plate pair may not be considered as a pressure-retaining weld by all pressure design codes. This weld should, however, be qualified and performed in accordance with the pressure design code.

A.4.2 Assembly—Guidance to 9.3

A.4.2.1 The opening and closing of the tie bolts can become difficult due to the high friction forces between the bolt head, the washer, and the covers for units larger than those with a DN 100 (NPS 4 in.) port size. Therefore, a device that reduces friction forces can be used between the tie bolt head and the covers.

Examples of suitable devices include:

a) Bearing boxes.

b) Thrust washers.

c) Independent hydraulic tensioner.

d) Rolled threads for the tightening bolts. These also reduce frictional loss and seizing.

A.4.2.2 It is imperative that the vendor's installation procedures, including alignment tolerances and the use of compression bolts, bearing boxes, etc., be strictly followed to ensure a leak-free installation. Plate packs with a large number of heat transfer plates and overall compression are particularly prone to misalignment of the heat transfer plates, commonly referred to as 'snaking', when not properly tightened and can lead to premature leakage. There may be some heat transfer plate and gasket combinations where there is physical space for additional heat transfer plates, but potentially have issues with 'snaking'. Expansion should be verified with the original manufacture.

Copyright American Petroleum Institute

A.5 Equipment Drying and Preservation—Guidance to 10.2.8 and 11.2

A.5.1 If water residues cannot be tolerated then equipment should be dried by one of the following methods:

a) Blowing dry air or nitrogen, of relative humidity less than 15 % (usually dehumidified), through the plate-and-frame heat exchanger and monitoring the outlet air until the relative humidity falls below 30 %.

b) Evacuating the plate-and-frame heat exchanger with a vacuum pump to an absolute pressure of between 0.4 kPa (0.06 psi) and 0.5 kPa (0.075 psi).

A.5.2 After draining and drying, internal surfaces can be protected against corrosion by the addition of desiccant (e.g. silica gel) bags, by the addition of a volatile corrosion inhibitor, or by blanketing with an inert gas such as nitrogen [typically at gauge pressures up to 100 kPa (15 psi)].

A.6 Painting and Applied Internal Linings—Guidance to 10.2.9

Set-in connections on the fixed or moveable covers require the nozzle be attached with welds on both the inside and outside of the fixed or moveable cover. Painting the pressure welds after the final pressure test would require disassembly of the heat exchanger to complete the painting. The heat exchanger is reassembled after the pressure welds have been painted and a leak test will be undertaken. Painting the components, other than the pressure welds, prior to the final pressure test and then painting the pressure welds after the final pressure test may result in the “local” paint of the pressure welds not matching the quality of the other painted areas.

For set-in nozzle connections provided with internal liners, welds are required on both the inside and outside surfaces of the connection (see Figure 4, sketch e), and the inside surface weld of the liner is required to allow for gasket seating on the end plate. It is not possible to perform the pressure test prior to the installation of this liner.

The pressure design code may permit alternative testing to ensure that painting of the pressure retaining welds can be completed prior to the final pressure test.

Copyright American Petroleum Institute

Annex B
(informative)

Plate-and-Frame Heat Exchanger Checklist

Completion of the checklist (Table B.1) is the responsibility of the purchaser.

This checklist is used for listing the purchaser's specific requirements for which the paragraphs or subsections within this standard include a choice or which designate, by use of a bullet [•] in the margin, that a decision is required.

Table B.1—Checklist

Subsection	Requirement	Item		
4.1	Pressure design code.	State required code.		
4.2	Structural welding code.	State required code.		
4.6	Applicable local regulations.	State required regulations		
4.7	Is the unit subject to sour or wet hydrogen sulfide service on the hot side?	Yes	No	
	Is the unit subject to sour or wet hydrogen sulfide service on the cold side?	Yes	No	
4.8	Are requirements for sour or wet hydrogen sulfide service to be applied where carbon steel is lined?	Yes	No	
4.9	Is cyclic design service required? If yes provide detailed information.	Yes (provide requirements)	No	
5.9	Vendor to provide data to allow thermal verification.	Yes	No	
6.2.2	Copies required of applicable welding procedure specifications, welding procedure qualifications and weld map.	For review	For record	Not required
6.2.3	Copies required of mechanical design calculations including for supports, lifting and pulling devices.	For review	For record	Not required
6.2.4	Specify if information about quality control system required, and if quality control plan required.	Yes (clarify requirements)		No
6.3.1	Specify the format and quantities for the listed final documentation.	Provide requirements.		
7.2.1	Specify a maximum design temperature and a minimum design metal temperature (MDMT) for hot and cold sides.	Complete on datasheet.		
7.4	Specify fouling margin.	Complete on datasheet.		
7.6.6	Specify if shroud required to protect against spray leaks.	Yes	No	
7.6.7	Specify if a fire-protection shroud is required and, if so, level of protection required.	Complete on datasheet.		
7.6.8	Specify if drip tray required.	Yes	No	
7.7.2	Specify if studded or flanged connections required. If flanged, specify required design code.	Complete on datasheet.		
7.7.3	Specify the flange gasket facings or the studded port liner facings.	Complete on datasheet.		
7.7.7	Specify if nozzles welded to cover plates to be set-on or set-in.	Complete on datasheet.		
7.7.13	Specify for alloy lined flanged connections if a threaded tell-tale hole to be provided.	Yes	No	
8.2.3	Specify maximum allowable carbon equivalent and/or restrictions on other residual elements and micro-alloying elements for carbon steel components in sour or wet hydrogen sulfide service.			

Copyright American Petroleum Institute

Table B.1—Checklist (Continued)

Subsection	Requirement	Item	
10.1.1	Specify extent of nondestructive testing of the heat transfer plates.	Complete on datasheet.	
10.1.3	Specify NDE for semi-welded heat transfer plate pairs by vacuum or helium leak test or eddy current test.	Complete on datasheet.	
10.1.5	Specify if set-on nozzle attachments are to be ultrasonically examined.	Yes	No
10.1.6	Specify if all carbon steel plate in sour or wet hydrogen sulfide service shall require UT lamination check?	Yes	No
10.2.8	Are there additional requirements for equipment drying or preservation?	Yes	No
10.2.9	Specify if paint or other coatings may be applied over welds, and any installed liners, prior to the final pressure test.	Yes	No
11.7	Specify if there are requirements for surface preparation and protection (e.g. painting).	Complete on datasheet.	
11.9	Specify if inert gas purge and fill is required?	Yes	No

Copyright American Petroleum Institute

Annex C
(informative)

Plate-and-Frame Heat Exchanger Datasheets

The following datasheets are provided to assist the designer, vendor, and purchaser to specify the data necessary for the design of a plate-and-frame heat exchanger for petroleum and natural gas services.

Completion of the datasheets is a joint responsibility of the purchaser and the vendor. The purchaser (owner or contractor) is responsible for the process data, which define the purchaser's explicit requirements.

After the exchanger has been fabricated, the vendor should complete the datasheets to make a permanent record that accurately describes the equipment "as-built."

--`,```,``,,,,``,,,,```,,,,```,,,,-`-`,,`,,`,`,,`---
Copyright American Petroleum Institute

Company	PLATE AND FRAME HEAT EXCHANGER DATA SHEET (SI UNITS) PROCESS	Engineering contractor
P.O. No.:	**Doc. No.:**	**Page 1 of**

1	Client:	Location:
2	Process unit:	Item No.:
3	Job No.:	Fabricator:
4	Service of unit:	Model:
5		Serial No.:

6	**CASE**		HOT SIDE		COLD SIDE
7	Fluid name				
8	Total flow	(kg/s)			
9	Flow per exchanger	(kg/s)			
10	Design temperature (max.)	(°C)			
11	Minimum design metal temp.	(°C)			
12	Design pressure	[kPa (ga)]			
13	Pressure drop allowable./calc.	(kPa)	/		/
14	Port calc. pressure drop inlet/outlet	(kPa)	/		/
15	Wall temperature min./max.	(°C)	/		/
16	Fouling margin [a]	(%)			
17	**OPERATING DATA**		INLET	OUTLET	INLET	OUTLET
18	Liquid flow	(kg/s)				
19	Vapor flow	(kg/s)				
20	Noncondensables flow	(kg/s)				
21	Operating temperature	(°C)				
22	Operating pressure	[kPa (ga)]				
23	**LIQUID PROPERTIES**					
24	Density	(kg/m^3)				
25	Specific heat capacity	(kJ/kg·K)				
26	Dynamic viscosity	(mPa·s)				
27	Thermal conductivity	(W/m·K)				
28	Surface tension	(N/m)				
29	**VAPOR PROPERTIES**					
30	Density	(kg/m^3)				
31	Specific heat capacity	(kJ/kg·K)				
32	Dynamic viscosity	(mPa·s)				
33	Thermal conductivity	(W/m·K)				
34	Relative molecular mass	(kg/kmol)				
35	Relative molecular mass, noncondensables	(kg/kmol)				
36	Dew point/bubble point	(°C)				
37	Solids maximum size	(mm)				
38	Solids concentration (% volume)					
39	Latent heat	(kJ/kg)				
40	Critical pressure	[kPa (abs)]				
41	Critical temperature	(°C)				
42						
43	Total heat exchanged	(kW)				
44	U [a]	($W/m^2·K$)	Clean Condition		Service	
45	LMTD	(°C)		/		
46	Heat transfer area	(m^2)				
47	Stream heat transfer coefficient	($W/m^2·K$)				

48 [a] Fouling margin = $[(U_{clean}/U_{service}) - 1] \times 100$ % where U = Overall heat transfer coefficient (thermal transmittance).

56 NOTES:
57
58

Rev. No.	Description	Date	Prepared by	Reviewed by	

Copyright American Petroleum Institute

Company	PLATE AND FRAME HEAT EXCHANGER DATA SHEET (SI UNITS) MECHANICAL	Engineering contractor
P.O. No.:	**Doc. No.:**	**Page 2 of**

1	**CONFIGURATION FOR EXCHANGER AND HEAT TRANSFER PLATE DETAILS**			
2	Number of exchangers in parallel		Heat transfer area/total (mm^2)	
3	Number of exchangers in series		Heat transfer area per plate (mm^2)	
4	Number of passes, hot side		Number of plates per exchangers	
5	Number of passes, cold side		Max. number of plates per exchangers	
6	Relative directions of fluids	Cocurrent/countercurrent	Plate chevron angle(s)	
7	Plate gap (mm)		Nominal plate thickness (mm)	

8	**DESIGN DATA**				
9	Pressure vessel code				
10	Material certificate type				
11	Code stamp	Yes ( )	No ( )		
12	Applicable specifications				
13	Local rules and regulations				
14	Local register of exchanger				
15		HOT SIDE		COLD SIDE	
16	Test pressure [kPa (ga)]				
17	MAWP [kPa (ga)]				
18	Velocity between plates (m/s)				
19	Wall shear-stress (Pa)				
20	Volume liquid per exchanger (m^3)				
21	Length/width/height (mm)	/		/	
22	Mass empty/full of water (kg)	/			
24	**CONNECTIONS**	IN	OUT	IN	OUT
25	Nozzle size (DN)				
26	Flange rating/type	/	/	/	/
27	**COMPONENTS**	MATERIALS			
28	Exchanger type	Gasketed ( )	Semi-welded ( )		
29	Heat Transfer Plates				
30	Gasket fixing	Glued ( )	Not gluid ( )		
31	Gasket material hot side/cold side				
32	Cover fixed/movable				
33	Tie bolts/nuts				
34	Connection design	Studded ( )	Flanged nozzles ( )		
35	Nozzle pipes/flanges				
36	Corrosion allowance on connections (mm)				
37	Stud bolts/nuts				
38	Shroud	None ( )	Spray ( )	Fire ( )	
39	Drip tray	Yes ( )	No ( )	By others ( )	
40	Painting specification	Manufacturers std ( )		Purchasers std ( )	
41	Insulation	Yes ( )	No ( )	By others ( )	
43	**LOADING**				
44	Connection loads/moments	Standard ( )		Purchaser specification ( )	
45	Wind loading				
46	Explosion blast pressure				
47	Earthquake loading				
48	Transport loading at sea				
50	**TESTING ABD INSPECTION**				
51	Specific drying procedure		Yes ( )	No ( )	
52	Dried by blowing air		Yes ( )	No ( )	
53	Nondestructive testing in addition to the pressure design code				
54	Inspection required		Purchaser ( )	Third party ( )	

Rev. No.	Description	Date	Prepared by	Reviewed by

Copyright American Petroleum Institute

Company	PLATE AND FRAME HEAT EXCHANGER DATA SHEET (SI UNITS) PHYSICAL PROPERTIES	Engineering contractor
P.O. No.:	Doc. No.:	Page 3 of

1	PHYSICAL PROPERTIES								
2	(INCLUDING WATER IF PRESENT)								
3	**CASE**								
4	Temperature (°C)								
5	Presssure [kPa (abs)]								
6	Heat Released (kW)								
7	**LIQUID PHASE**								
8	Mass fraction vapor								
9	Mass fraction H2O in liquid								
10	Density (kg/m^3)								
11	Specific heat capacity (kJ/kg·K)								
12	Dynamic viscosity (mPa·s)								
13	Thermal conductivity (W/m·K)								
14	Surface tension (N/m)								
15	Vapor pressure [kPa (abs)]								
16	**VAPOR PHASE**								
17	Density (kg/m^3)								
18	Specific heat capacity (kJ/kg·K)								
19	Dynamic viscosity (mPa·s)								
20	Thermal conductivity (W/m·K)								
21	Vapor pressure [kPa (abs)]								
22	Relative molecular mass (kg/kmol)								
23	Latent heat (kJ/kg)								
24	Critical pressure [kPa (abs)]								
25	Critical temperature (°C)								
26	**NOTES**								
27									
28									
29									
30									
31									
32									
33									
34									
35									
36									
37									
38									
39									
40									
41									
42									
43									
44									
45									
46									
47									
48									
49									
50									
51									

Rev. No.	Description	Date	Prepared by	Reviewed by

Copyright American Petroleum Institute

Company	PLATE AND FRAME HEAT EXCHANGER DATA SHEET (SI UNITS) CYCLIC SERVICE INFORMATION	Engineering contractor
P.O. No.:	Doc. No.:	Page 4 of

Description of Cyclic Service Operation

Condition	Time (h/min)	Duration (h/min)	Composition	Flow rate (kg/h)

Condition	Time (h/min)	Duration (h/min)	Temperature (°C)	Pressure [kPa(g)]

NOTES

Rev. No.	Description	Date	Prepared by	Reviewed by

Copyright American Petroleum Institute

Company	PLATE AND FRAME HEAT EXCHANGER DATA SHEET (US CUSTOMARY UNITS) PROCESS	Engineering contractor
P.O. No.:	Doc. No.:	Page 1 of

1	Client:		Location:			
2	Process unit:		Item No.:			
3	Job No.:		Fabricator:			
4	Service of unit:		Model:			
5			Serial No.:			
6	**CASE**		HOT SIDE		COLD SIDE	
7	Fluid name					
8	Total flow	(lb/h)				
9	Flow per exchanger	(lb/h)				
10	Design temperature (max.)	(°F)				
11	Minimum design metal temp.	(°F)				
12	Design pressure	(psig)				
13	Pressure drop allowable./calc.	(psi)	/		/	
14	Port calc. pressure drop inlet/outlet	(kPa)	/		/	
15	Wall temperature min./max.	(°F)	/		/	
16	Fouling margin [a]	(%)				
17	**OPERATING DATA**		INLET	OUTLET	INLET	OUTLET
18	Liquid flow	(lb/h)				
19	Vapor flow	(lb/h)				
20	Noncondensables flow	(lb/h)				
21	Operating temperature	(°F)				
22	Operating pressure	(psig)				
23	**LIQUID PROPERTIES**					
24	Density	(lb/ft^3)				
25	Specific heat capacity	(BTU/lb·°R)				
26	Dynamic viscosity	(cP)				
27	Thermal conductivity	(BTU/ft·h·°R)				
28	Surface tension	(Dynes/cm)				
29	**VAPOR PROPERTIES**					
30	Density	(lb/ft^3)				
31	Specific heat capacity	(BTU/lb·°R)				
32	Dynamic viscosity	(cP)				
33	Thermal conductivity	(BTU/ft·h·°R)				
34	Relative molecular mass	(lb/lb·mol)				
35	Relative molecular mass, noncondensables	(lb/lb·mol)				
36	Dew point/bubble point	(°F)				
37	Solids maximum size	(in.)				
38	Solids concentration (% volume)					
39	Latent heat	(BTU/lb)				
40	Critical pressure	(psia)				
41	Critical temperature	(°F)				
42						
43	Total heat exchanged	(BTU/h)				
44	U [a]	($BTU/h \cdot ft^2 \cdot °R$)	Clean Condition		Service	
45	LMTD	(°F)			/	
46	Heat transfer area	(ft^2)				
47	Stream heat transfer coefficient	($BTU/h \cdot ft^2 \cdot °R$)				
48	[a] Fouling margin = $[(U_{clean}/U_{service}) - 1]$ ´ 100 % where U = Overall heat transfer coefficient (thermal transmittance).					
56	NOTES:					
57						
58						

Rev. No.	Description	Date	Prepared by	Reviewed by	

--`,,```,,,

Company	PLATE AND FRAME HEAT EXCHANGER DATA SHEET (US CUSTOMARY UNITS) MECHANICAL	Engineering contractor
P.O. No.:	Doc. No.:	Page 2 of

1	**CONFIGURATION FOR EXCHANGER AND HEAT TRANSFER PLATE DETAILS**			
2	Number of exchangers in parallel		Heat transfer area/total (ft^2)	
3	Number of exchangers in series		Heat transfer area per plate (ft^2)	
4	Number of passes, hot side		Number of plates per exchangers	
5	Number of passes, cold side		Max. number of plates per exchangers	
6	Relative directions of fluids	Cocurrent/countercurrent	Plate chevron angle(s)	
7	Plate gap (in.)		Nominal plate thickness (in.)	

8	**DESIGN DATA**				
9	Pressure vessel code				
10	Material certificate type				
11	Code stamp	Yes ( )	No ( )		
12	Applicable specifications				
13	Local rules and regulations				
14	Local register of exchanger				
15		HOT SIDE		COLD SIDE	
16	Test pressure (psig)				
17	MAWP (psig)				
18	Velocity between plates (ft/s)				
19	Wall shear-stress (psi)				
20	Volume liquid per exchanger (ft^3)				
21	Length/width/height (in.)	/		/	
22	Mass empty/full of water (lb)	/			
24	**CONNECTIONS**	IN	OUT	IN	OUT
25	Nozzle size (NPS)				
26	Flange rating/type	/	/	/	/
27	**COMPONENTS**	MATERIALS			
28	Exchanger type	Gasketed ( )	Semi-welded ( )		
29	Heat Transfer Plates				
30	Gasket fixing	Glued ( )	Not gluid ( )		
31	Gasket material hot side/cold side				
32	Cover fixed/movable				
33	Tie bolts/nuts				
34	Connection design	Studded ( )	Flanged nozzles ( )		
35	Nozzle pipes/flanges				
36	Corrosion allowance on connections (in.)				
37	Stud bolts/nuts				
38	Shroud	None ( )	Spray ( )	Fire ( )	
39	Drip tray	Yes ( )	No ( )	By others ( )	
40	Painting specification	Manufacturers std. ( )		Purchasers std. ( )	
41	Insulation	Yes ( )	No ( )	By others ( )	
43	**LOADING**				
44	Connection loads/moments	Standard ( )		Purchaser specification ( )	
45	Wind loading				
46	Explosion blast pressure				
47	Earthquake loading				
48	Transport loading at sea				
50	**TESTING ABD INSPECTION**				
51	Specific drying procedure	Yes ( )	No ( )		
52	Dried by blowing air	Yes ( )	No ( )		
53	Nondestructive testing in addition to the pressure design code				
54	Inspection required	Purchaser ( )	Third party ( )		

Rev. No.	Description	Date	Prepared by	Reviewed by

Copyright American Petroleum Institute

Company	PLATE AND FRAME HEAT EXCHANGER DATA SHEET (US CUSTOMARY UNITS) PHYSICAL PROPERTIES	Engineering contractor
P.O. No.:	Doc. No.:	Page 3 of

1	PHYSICAL PROPERTIES								
2	(INCLUDING WATER IF PRESENT)								
3	**CASE**								
4	Temperature (°F)								
5	Presssure (psia)								
6	Heat Released (BTU/h)								
7	**LIQUID PHASE**								
8	Mass fraction vapor								
9	Mass fraction H2O in liquid								
10	Density (lb/ft^3)								
11	Specific heat capacity (BTU/lb·°R)								
12	Dynamic viscosity (cP)								
13	Thermal conductivity (BTU/h·ft·°R)								
14	Surface tension (dyn/cm)								
15	Vapor pressure (psia)								
16	**VAPOR PHASE**								
17	Density (lb/ft^3)								
18	Specific heat capacity (BTU/lb·°R)								
19	Dynamic viscosity (cP)								
20	Thermal conductivity (BTU/h·ft·°R)								
21	Vapor pressure (psia)								
22	Relative molecular mass (lb/lb·mol)								
23	Latent heat (BTU/lb)								
24	Critical pressure (psia)								
25	Critical temperature (°F)								
26	**NOTES**								
27									
28									
29									
30									
31									
32									
33									
34									
35									
36									
37									
38									
39									
40									
41									
42									
43									
44									
45									
46									
47									
48									
49									
50									
51									

Rev. No.	Description	Date	Prepared by	Reviewed by

Copyright American Petroleum Institute

Company	PLATE AND FRAME HEAT EXCHANGER DATA SHEET (US CUSTOMARY UNITS) CYCLIC SERVICE INFORMATION	Engineering contractor
P.O. No.:	Doc. No.:	Page 4 of

Description of Cyclic Service Operation

Condition	Time (h/min)	Duration (h/min)	Composition	Flow rate (lb/h)

Condition	Time (h/min)	Duration (h/min)	Temperature (°F)	Pressure (psig)

Bibliography

[1] API Recommended Practice 571, *Damage Mechanisms Affecting Fixed Equipment in the Refining Industry*

[2] EN 13445, [3] *Unfired pressure vessels* (all parts)

[3] ASME, *Boiler and Pressure Vessel Code*, [1] *(BPVC) Section VIII: Rules for Construction of Pressure Vessels Division 1*

[4] ASME, *Boiler and Pressure Vessel Code, (BPVC) Section VIII: Rules for Construction of Pressure Vessels*; *Division 2: Alternative Rules*

[5] ASME B16.5, *Pipe Flanges and Flanged Fittings NPS 1/2 Through NPS 24 Metric/Inch Standard*

[6] EN 10160, *Ultrasonic testing of steel flat product of thickness equal or greater than 6 mm (reflection method)*

[7] ASTM A578/578M, *Standard Specification for Straight-Beam Ultrasonic Examination of Rolled Steel Plates for Special Applications*

[3] ASME International, 3 Park Avenue, New York, New York 10016-5990, www.asme.org.

Copyright American Petroleum Institute

Copyright American Petroleum Institute

American
Petroleum
Institute

200 Massachusetts Avenue, NW
Suite 1100
Washington, DC 20001-5571
USA

202-682-8000

Additional copies are available online at www.api.org/pubs

Phone Orders:	1-800-854-7179	(Toll-free in the U.S. and Canada)
	303-397-7956	(Local and International)
Fax Orders:	303-397-2740	

Information about API publications, programs and services is available on the web at www.api.org.

Product No. C66701

Copyright American Petroleum Institute