Type Testing of Process Valve Packing for Fugitive Emissions

API STANDARD 622
SECOND EDITION, OCTOBER 2011

energy API®
AMERICAN PETROLEUM INSTITUTE

Type Testing of Process Valve Packing for Fugitive Emissions

Downstream Segment

API STANDARD 622
SECOND EDITION, OCTOBER 2011

energy API®
AMERICAN PETROLEUM INSTITUTE

Special Notes

API publications necessarily address problems of a general nature. With respect to particular circumstances, local, state, and federal laws and regulations should be reviewed.

Neither API nor any of API's employees, subcontractors, consultants, committees, or other assignees make any warranty or representation, either express or implied, with respect to the accuracy, completeness, or usefulness of the information contained herein, or assume any liability or responsibility for any use, or the results of such use, of any information or process disclosed in this publication. Neither API nor any of API's employees, subcontractors, consultants, or other assignees represent that use of this publication would not infringe upon privately owned rights.

API publications may be used by anyone desiring to do so. Every effort has been made by the Institute to assure the accuracy and reliability of the data contained in them; however, the Institute makes no representation, warranty, or guarantee in connection with this publication and hereby expressly disclaims any liability or responsibility for loss or damage resulting from its use or for the violation of any authorities having jurisdiction with which this publication may conflict.

API publications are published to facilitate the broad availability of proven, sound engineering and operating practices. These publications are not intended to obviate the need for applying sound engineering judgment regarding when and where these publications should be utilized. The formulation and publication of API publications is not intended in any way to inhibit anyone from using any other practices.

Any manufacturer marking equipment or materials in conformance with the marking requirements of an API standard is solely responsible for complying with all the applicable requirements of that standard. API does not represent, warrant, or guarantee that such products do in fact conform to the applicable API standard.

Classified areas may vary depending on the location, conditions, equipment, and substances involved in any given situation. Users of this standard should consult with the appropriate authorities having jurisdiction.

Users of this standard should not rely exclusively on the information contained in this document. Sound business, scientific, engineering, and safety judgment should be used in employing the information contained herein.

API is not undertaking to meet the duties of employers, manufacturers, or suppliers to warn and properly train and equip their employees, and others exposed, concerning health and safety risks and precautions, nor undertaking their obligations to comply with authorities having jurisdiction.

Information concerning safety and health risks and proper precautions with respect to particular materials and conditions should be obtained from the employer, the manufacturer or supplier of that material, or the material safety data sheet.

All rights reserved. No part of this work may be reproduced, translated, stored in a retrieval system, or transmitted by any means, electronic, mechanical, photocopying, recording, or otherwise, without prior written permission from the publisher. Contact the Publisher, API Publishing Services, 1220 L Street, NW, Washington, DC 20005.

Copyright © 2011 American Petroleum Institute

Foreword

This standard is under the jurisdiction of the API Subcommittee on Piping.

This standard shall become effective on the date printed on the cover, but may be used voluntarily from the date of publication.

Nothing contained in any API publication is to be construed as granting any right, by implication or otherwise, for the manufacture, sale, or use of any method, apparatus, or product covered by letters patent. Neither should anything contained in the publication be construed as insuring anyone against liability for infringement of letters patent.

Shall: As used in a standard, “shall” denotes a minimum requirement in order to conform to the specification.

Should: As used in a standard, “should” denotes a recommendation or that which is advised but not required in order to conform to the specification.

This document was produced under API standardization procedures that ensure appropriate notification and participation in the developmental process and is designated as an API standard. Questions concerning the interpretation of the content of this publication or comments and questions concerning the procedures under which this publication was developed should be directed in writing to the Director of Standards, American Petroleum Institute, 1220 L Street, NW, Washington, DC 20005. Requests for permission to reproduce or translate all or any part of the material published herein should also be addressed to the director.

Generally, API standards are reviewed and revised, reaffirmed, or withdrawn at least every five years. A one-time extension of up to two years may be added to this review cycle. Status of the publication can be ascertained from the API Standards Department, telephone (202) 682-8000. A catalog of API publications and materials is published annually by API, 1220 L Street, NW, Washington, DC 20005.

Suggested revisions are invited and should be submitted to the Standards Department, API, 1220 L Street, NW, Washington, DC 20005, standards@api.org.

Contents

Page

1 Scope . . . 1

2 Reference Publications . . . 1

3 Terms and Definitions . . . 2

4 Fugitive Emissions Test . . . 4
4.1 Test Fixture . . . 4
4.2 Leak Test Equipment Selection and Calibration . . . 7
4.3 Packing Selection and Installation . . . 7
4.4 Test Procedure . . . 8

5 Corrosion Test . . . 11
5.1 Corrosion Test Overview . . . 11
5.2 Pre-Test Requirements . . . 11
5.3 Ambient Corrosion Testing . . . 12
5.4 High Temperature Corrosion Testing . . . 13
5.5 Corrosion Test Reporting . . . 14

6 Packing Materials Test . . . 15
6.1 Weight Loss Testing . . . 15
6.2 Density . . . 16
6.3 Lubricant Content . . . 16
6.4 Leachables . . . 17
6.5 Packing Materials Test Reporting . . . 17

Annex A (normative) NEEDS TITLE . . . 18

Annex B (normative) Emissions Test Fixture Construction . . . 26

Annex C (normative) High Temperature Corrosion Test Fixture Construction . . . 28

Figures
1 Emission Test Fixture . . . 5
2 Mechanical and Thermal Cycling Diagram . . . 8
3 Emission Test Equipment Setup . . . 10
4 Emission Test Fixture Detail . . . 10
5 Corrosion Test Vessel . . . 12
6 Compression Test Fixture . . . 13
7 High Temperature Corrosion Test System . . . 14
B.1 Emissions Test Fixture . . . 27
C.1 High Temperature Corrosion Test Fixture . . . 29

Tables
A.1 Fugitive Emissions Test Report Summary . . . 18
A.2 Ambient Temperature Corrosion Test Data Sheet . . . 21
A.3 High Temperature Corrosion Test Data Sheet . . . 22
A.4 Material Test Report . . . 23

Introduction

The purpose of this API standard is to establish a uniform procedure for evaluation of process valve stem packing. The testing approaches defined within this standard provide a method for evaluating packing systems. This testing program shall provide a basis for the comparison of the emissions and life cycle performance of packing.

Use of this standard assumes the execution of its provisions is entrusted to appropriately qualified and experienced personnel because it calls for procedures that can be injurious to health if adequate precautions are not taken. This standard refers only to technical suitability and does not absolve the user from legal obligations relating to health and safety at any stage of the procedure.

Type Testing of Process Valve Packing for Fugitive Emissions

1 Scope

This standard specifies the requirements for comparative testing of valve stem packing for process applications where fugitive emissions are a consideration. Packing(s) shall be suitable for use at service temperatures –29 °C to 538 °C (–20 °F to 1000 °F). Factors affecting fugitive emissions performance that are considered by this standard include temperature, pressure, thermal cycling, mechanical cycling, and corrosion.

This standard is not intended to replace type testing of valve assemblies or valve production testing.

This standard establishes requirements and parameters for the following tests:

a) fugitive emissions,

b) corrosion, and

c) packing material composition and properties.

Test methods apply to packing for use in on-off valves with the following stem motion(s):

a) rising stem, and

b) rotating stem.

The test for fugitive emissions is based upon elements of EPA Method 21, providing comparative values of packing performance.

2 Reference Publications

The following standards contain provisions that, through reference in this text, constitute provisions of this API standard. At the time of the publication, the editions indicated were valid. All standards are subject to revision, and parties to agreements based on this standard are encouraged to investigate the possibility of applying the most recent editions of the standards indicated below.

ASME B16.5[1], *Pipe Flanges and Flanged Fittings*

ASME B16.20, *Metallic Gaskets for Pipe Flanges—Ring Joint, Spiral-wound, and Jacketed*

ASME B16.34, *Valves—Flanged, Threaded and Welding End*

ASME SECT VIII DIV2, *ASME Boiler and Pressure Vessel Code*

EPA[2] Method 21, *Determination of Volatile Organic Compound Leaks*

FSA[3]-G-604-07, *Oxidation Test Standard for Flexible Graphite Gasket Materials*

MSS[4] SP-120, *Flexible Graphite Packing System for Rising Stem Steel Valves—Design Requirements*

---

[1] ASME International, 3 Park Avenue, New York, New York 10016-5990, www.asme.org.
[2] U.S. Environmental Protection Agency, 109 TW Alexander Drive, Durham, North Carolina 27709, www.epa.gov.
[3] Fluid Sealing Association, 994 Old Eagle School Road, Suite 1019, Wayne, Pennsylvania 19087-1866, www.fluidsealing.com.
[4] Manufacturers Standard Society, 889 North Freedom Boulevard, Suite 100, Provo, Utah 84604, www.normas.com.

3 Terms and Definitions

For the purposes of this standard, the following definitions shall apply.

3.1
active inhibitor
A type of galvanic corrosion inhibitor, applied as a surface coating to packing or added to packing material during the die-forming process, providing a sacrificial anode material corroding in preference to the surrounding metal. See also **corrosion inhibitor**, **galvanic corrosion**, **passive inhibitor**, and **pitting**.

3.2
actuate
To cause movement of a valve stem either by raising, lowering or turning it.

3.3
anti-extrusion ring
A ring of packing used at one or both ends of a packing set to prevent extrusion of packing material into clearances.

3.4
ambient temperature
Temperature of testing facility that is between 15 °C (60 °F) to 40 °C (110 °F).

3.5
axial
In the direction of a shaft or stem axis.

3.6
braided packing
Packing typically constructed of intertwining strands of synthetic or natural fibers. Strands may consist of yarn or filaments, and may also include metallic materials. Two primary braid configurations are square and interbraided or interlocking.

3.7
bolt torque
The amount of twisting or turning effort (expressed as Nm, lbf-ft or lbf-in.) required to turn the nuts on a gland flange, commonly used to describe the load that a gland flange exerts on a valve packing set.

3.8
bore diameter
The inside diameter into which packing is inserted; also called the stuffing box bore.

3.9
bushing
Cylindrical spacer used to take up excess space in a stuffing box.

3.10
corrosion inhibitor
An ingredient added to packing that decreases the potential for galvanic corrosion in the stuffing box. Corrosion inhibitors may be classified as either passive or active. See also, **active inhibitor**, **galvanic corrosion**, **passive inhibitor**, and **pitting**.

3.11
die-formed packing
A valve stem packing typically constructed from ribbons of graphite tape or braided packing that has been subjected to pre-compression with tooling of a specific geometry. This process changes the shape and density of the material from its original free shape and natural density to a defined shape and higher density.

3.12
EPA Method 21
A leak check method established by the Federal Government Environmental Protection Agency (EPA) for performing emissions measurements on equipment such as valves, pumps, and flanges.

3.13
eccentricity
The distance that the central axis of a valve stem is offset from the central axis of the stuffing box through which it passes.

3.14
emissions
Gaseous leak given off by a piece of equipment. Used in reference to volatile organic hydrocarbons (VOCs) and expressed in parts per million volumetric (ppmv or ppm).

3.15
galvanic corrosion
An electro-chemical reaction that may occur between a metal and a material of a different chemical nobility, such as another metal, carbon, or graphite when both materials are exposed to an electrically conductive media. See also, **active inhibitor**, **corrosion inhibitor**, **passive inhibitor**, **pitting**.

3.16
gland
A movable part which protrudes into a stuffing box to compress a packing set or packing ring.

3.17
gland load
The amount of load applied to a packing set.

3.18
gland stud
A threaded rod or eye-bolt, extending from a valve body against which the gland flange is tightened to compress a packing set.

3.19
leak
Measurable amount of test fluid escaping from the test gland.

3.20
leak rate
The quantity of test fluid passing through (or around) a seal in a given period of time.

3.21
mechanical cycle
A motion of the stem simulating the movement of a valve obturator (such as disc or ball) from the fully closed position to the fully open position, and returning to the fully closed position. See also, **stroke**.

3.22
packing set
A grouping of individual packing rings designed to fill the cavity of the valve stuffing box.

3.23
passive inhibitor
A type of galvanic corrosion inhibitor blended into the raw graphite used in packing, providing a protective coating to prevent a galvanic reaction from occurring. See also, **active inhibitor**, **corrosion inhibitor**, **passive inhibitor**, **pitting**.

3.24
pitting
Surface cavities that occur on a metal as a result of galvanic corrosion or mechanical erosion. See also, **galvanic corrosion**.

3.25
rising stem valve
A valve in which the movement of the stem is in an axial direction, with no rotation.

3.26
rotating stem valve
A valve that will fully open or close with a nominal 90° rotation of the stem.

3.27
spacer bushing
See **bushing**.

3.28
stem
A metal rod that connects the obturator (such as a disc or ball) of a valve to a handwheel, handle, or actuator.

3.29
stroke
One half of a mechanical cycle starting from either a fully open or fully closed position. See also, **mechanical cycle**.

3.30
stuffing box
A space into which a compression packing is inserted. Also known as a packing chamber.

3.31
surface finish
A measure of the roughness of a surface typically expressed in micro-inches or micro-meters.

4 Fugitive Emissions Test

4.1 Test Fixture

4.1.1 The test stand packing gland is constructed as a fixture designed to simulate a typical valve. A test gland arrangement with a combined leak detection and gland flange is shown in Figure 1. The test fixture shall orient the stem in a horizontal position and shall be constructed so as not to affect test results. The use of bushings is allowed as necessary. Test stands may be equipped with multiple test fixtures. See Annex B for construction details.

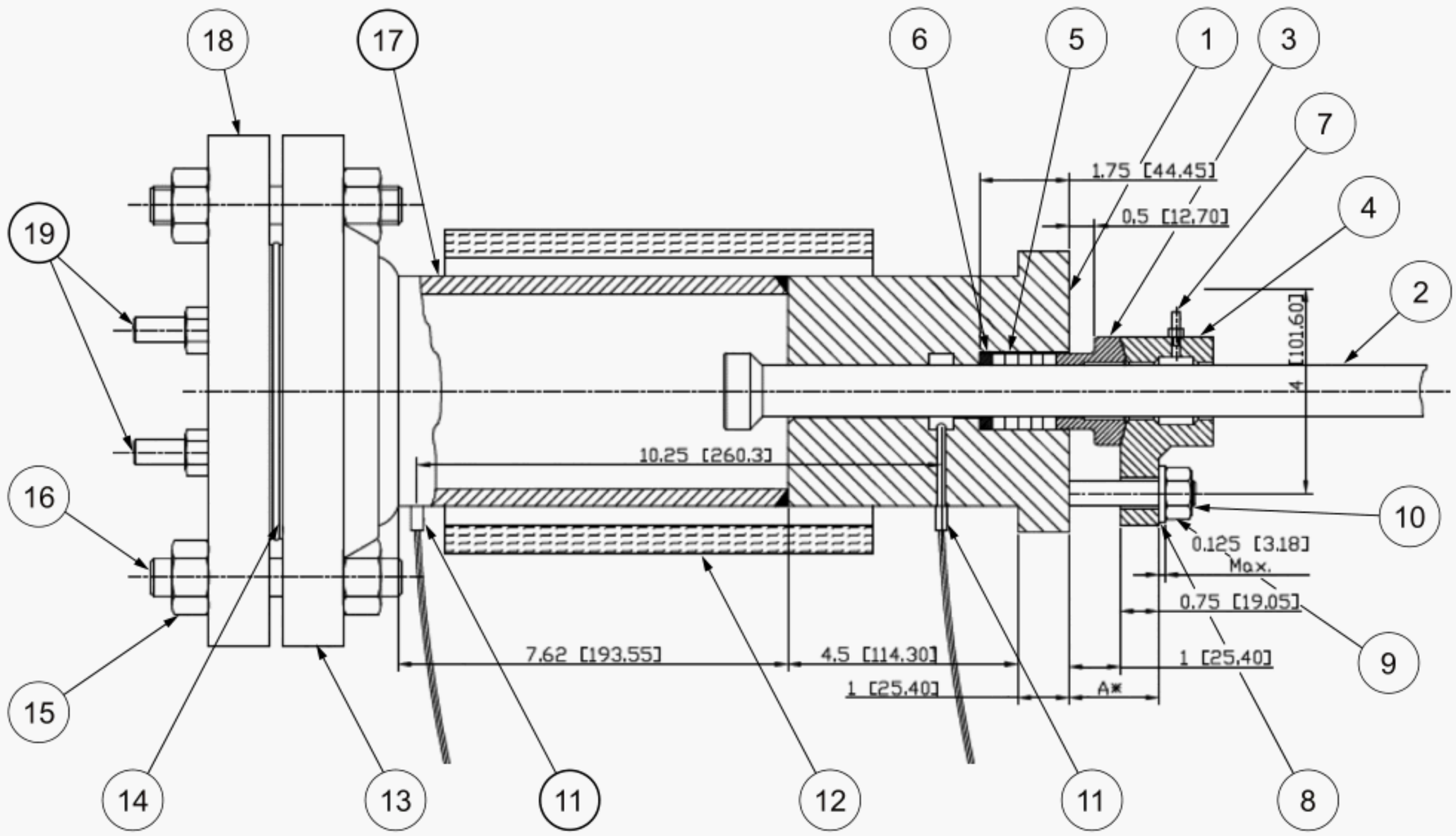

Key

1	bonnet	11	thermocouple
2	stem	12	heating element
3	gland	13	bonnet flange
4	gland flange	14	gasket
5	stem packing	15	flange stud nut
6	bushing	16	bonnet studs
7	leak detection fitting	17	housing
8	washer	18	blind flange
9	gland nut	19	gas inlet and outlet ports
10	gland stud		

Figure 1—Emission Test Fixture

4.1.1.1 Test fixture packing gland dimensions and tolerances shall be as follows.

a) Stem diameter: 25.4 mm + 0.0 mm or – 0.2 mm (1.000 in. + 0.0 in. or – 0.008 in.).

b) Stem straightness: Max. 0.04 mm per 305 mm (0.0016 in. per 12 in.).

c) Stem cylindricity: 0.04 mm (0.0016 in.) Max.

d) Stem surface finish: 0.40 µm Ra to 0.80 µm Ra (16 µ-in. Ra to 32 µ-in. Ra).

e) Stuffing box diameter: 38.1 mm + 0.25 mm or – 0.0 mm (1.5 in. + 0.010 in. or – 0.0 in.).

f) Stuffing box depth: 44.5 mm ± 1.5748 mm (1.75 in. ± 0.062 in.).

g) Stuffing box surface finish: 3.20 µm Ra + 1.25 µm Ra or – 0.625 µm (125 µ-in. Ra + 50 µ-in. Ra or –25 µ-in.).

h) Gland bottom machined flat parallel to gasket surface: Max. 0.15 mm (0.006 in.).

i) Gland to stuffing box diametrical clearance: 0.13 mm to 0.38 mm (0.005 in. to 0.015 in.).

j) Stem to gland (flange) diametrical clearance: 0.5 mm to 0.8 mm (0.020 in. to 0.030 in.).

k) Gland stud diameter: 5/8 in. - 11 UNC (2 pieces, length per Figure 1).

4.1.1.2 Test fixture components shall be constructed of carbon steel materials except for the following.

a) Stem: ASTM A182 Grade F6a Rc15-28.8 (200-275 HB).

b) Gland bolts and studs: ASTM A193 Grade B7.

c) Gland nuts: ASTM A194 Grade 2H.

d) Housing: DN 100 (4 in.) Schedule 80 Seamless Pipe or A-105.

e) Flanges: DN 100 (4 in.) Class 300 Per ASME B16.5 (material group ASME B16.5 Table F2-1.1) or ASTM A105.

4.1.2 Mechanical Cycle

The test fixture shall be equipped with an actuator capable of stroking the test stem to simulate the mechanical cycle of a valve as follows.

a) Rising stem:

Rate: 3 mm to 5 mm (0.12 in. to 0.20 in.) per second.

Stroke: 102 mm ± 3 mm (4 in. ± 0.12 in.).

b) Rotating stem:

Rate: 10° to 15° per second.

Rotation: 90° ± 5°.

4.1.3 External Loads

The actuator(s) shall not apply any transverse forces, such as side load, to the test stem.

4.1.4 Temperature Monitoring:

The test fixture(s) shall be equipped with thermocouples for continuously monitoring temperature during thermal cycling.

4.1.5 Temperature shall be monitored and recorded at the following two locations:

a) the flow line of the test chamber, and

b) adjacent to the stuffing box.

4.1.6 The thermocouple adjacent to the stuffing box shall control the test temperature.

4.1.7 The temperature at the flow line thermocouple shall be the reference measurement.

4.1.8 The fixture shall be heated using an external heat source, blanket, heating coils or other suitable equipment.

NOTE Refer to ASME Section VIII Division 2, Section 5.5, for information on fatigue analysis methodology.

4.2 Leak Test Equipment Selection and Calibration

4.2.1 Monitoring equipment shall be a flame ionization organic vapor analyzer capable of providing on-board data logging with digital readout. The equipment shall be certified as intrinsically safe for use with the test fluid.

4.2.2 The equipment shall meet the following performance requirements in the flame ionization mode using methane as the test fluid.

a) Variation: less than ± 2 % at 100 ppm.

b) Dynamic range: 1.0 ppm to 50,000 ppm.

c) Linear range: 1.0 ppm to 10,000 ppm.

d) Minimum detectable level (defined as 2 times the peak noise): 300 ppb hexane.

e) Maximum response time to reach final value: 3 seconds.

f) Maximum recovery time to return to 10 % of initial value: 5 seconds.

g) Sample flow rate at probe inlet: 1.14 l/min to 1.51 l/min (0.30 gal/min to 0.40 gal/min).

4.2.3 The testing equipment shall be calibrated according to the manufacturer's directions. A current record of test equipment calibration shall be maintained by the test facility.

4.2.4 The test equipment shall be inspected prior to each use to insure against fouling of the detector probe. This shall be done to EPA Method 21, using an external calibration gas with a known methane concentration.

4.3 Packing Selection and Installation

4.3.1 Pre-qualification

Packing submitted for type testing shall be certified by the packing manufacturer to be suitable for the conditions indicated in Section 1 of this standard.

4.3.2 Packing Selection

4.3.2.1 Test packing shall be selected at random from either:

a) a standard production lot as supplied by the manufacturer, or

b) a distributor stock.

4.3.2.2 Test packing shall be 6.3 mm ($^1/_4$ in.) cross-section for the test fixture. Validation of a random selection process shall be provided to the testing facility. Packing in production shall be pulled from standard production line. Random selection is not applicable for prototype material.

4.3.3 Packing Installation

A qualified laboratory representative or technician shall install the packing according to the manufacturer's standard installation instructions except that the maximum packing bolt stress shall not exceed 172,369 kPa (25,000 psi). However, the packing stress (load) during the testing shall not exceed the packing manufacturer's recommended maximum value.

4.3.3.1 Instructions for all packing installations:

a) all test fixture components shall be thoroughly cleaned with acetone or equivalent solvent prior to testing;

b) any reconditioned parts shall be inspected and shall comply with the requirements of 4.1.2;

c) components shall be inspected for damage prior to assembly;

d) caution shall be taken to avoid contact between the stem and gland;

e) fasteners shall be lubricated;

f) gland (flange) height measured from a specific datum shall be recorded;

g) special preparation of the packing or assembly components is prohibited.

4.4 Test Procedure

4.4.1 Test Fluid

The test fluid used shall be dry methane gas, 97 % minimum purity, subjected to a temperature range from ambient to 260 °C (500 °F) and pressures from 0 kPag to 4,137 kPag (0 psig to 600 psig) (see Figure 2).

4.4.2 Mechanical and Thermal Cycling

4.4.2.1 Packing in test rigs shall be subject to a total of 1510 mechanical cycles and 5 thermal cycles per Figure 2. Mechanical and thermal cycling shall begin with the test fixture at ambient temperature.

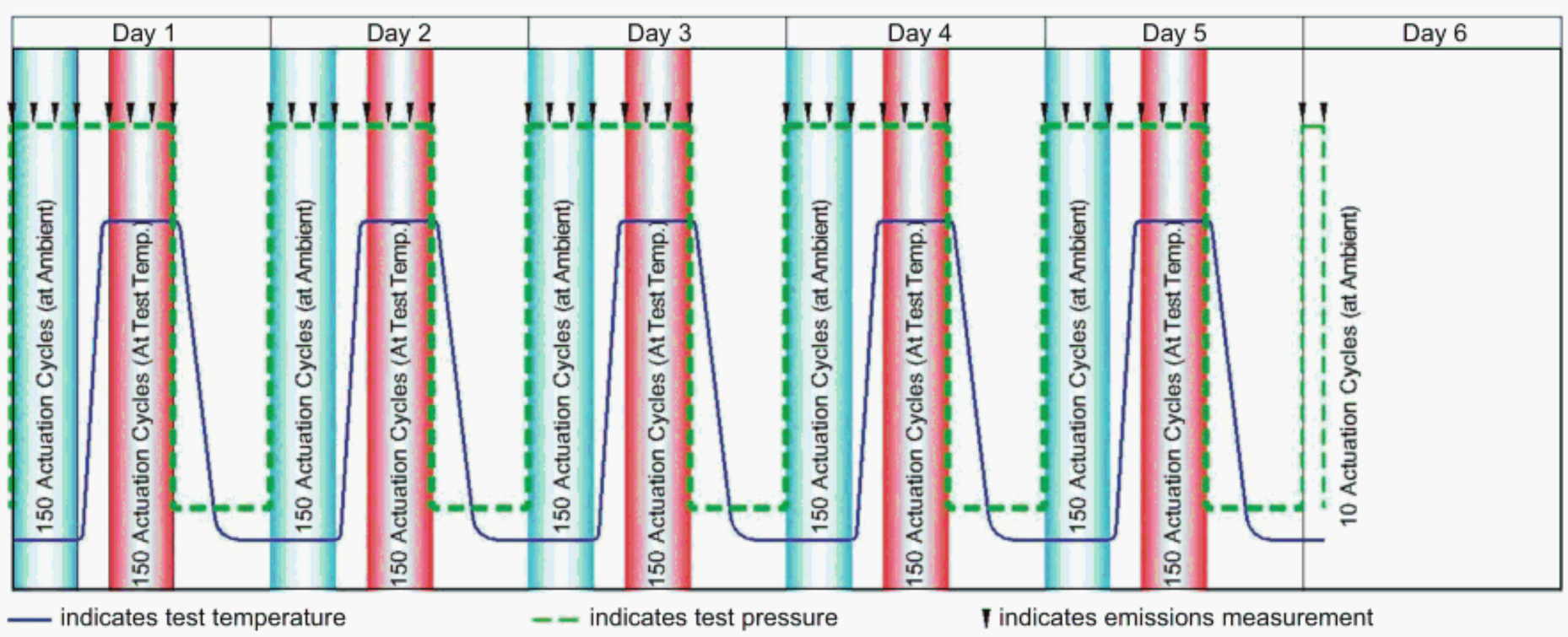

Figure 2—Mechanical and Thermal Cycling Diagram

4.4.2.2 Test Profile

The following are recommendations for accomplishing the testing cycles in Figure 2.

a) Test duration of five, 8 hour maximum days, and one, 2 hour maximum mechanical cycling day.

b) Mechanical cycles per day are 300.

c) Temperature cycle per day is 1.

— Pressure stays at 4,137 kPag ± 34 kPa (600 psig ± 5 psig).

— Cycles at ambient are 150.

— Cycles at 260 °C ± 3 °C (500 °F ± 5 °F) are 150.

d) Reduce the pressure to zero at the end of each day (thermal cycle).

e) Minimum daily cycling is to be divided up as follows:

— Ambient cycling at pressure is 3 hours.

— Max. 2 hours to bring up to temperature (no cycling during this time).

— Elevated temperature cycling is 3 hours.

— Daytime or Overnight cool down with no cycling during this period.

4.4.3 Leak Measurement

4.4.3.1 Leak measurements shall be conducted initially at the start of each day and at the completion of every 50 cycles. For each measurement, a minimum of 10 readings shall be taken over a one minute duration. The average reading shall be calculated and recorded. If any reading is more than fifty percent greater than the average, except for when the average leakage rates are less than 10 ppmv, the readings shall be repeated.

4.4.3.2 The leak measurement shall be conducted using fixed detection probes located at the 12 AM and 12 PM positions directly above the potential leak points as shown in Figure 4.

4.4.3.3 Leak measurements shall be taken while the stem is in the static condition.

4.4.3.4 The connections to the fixture and methane leak detector shall be made using tubing having the same inside diameter as the standard leak probe and connected as shown in Figure 3 and Figure 4.

4.4.3.5 The leak detector shall measure the combined flows from the stem outside diameter (OD) and from the gland OD.

4.4.3.6 The emissions leak test system shall conform to all local and governmental safety standards and shall be equipped with pressure relief valve(s) and rupture disc and vents.

4.4.4 Packing Adjustment

4.4.4.1 At the option of the packing manufacturer, one adjustment to the manufacturer's specified gland load may be made if the leak rate performance, as defined in paragraph 4.4.3.1, exceeds the manufacturer's maximum allowable leakage.

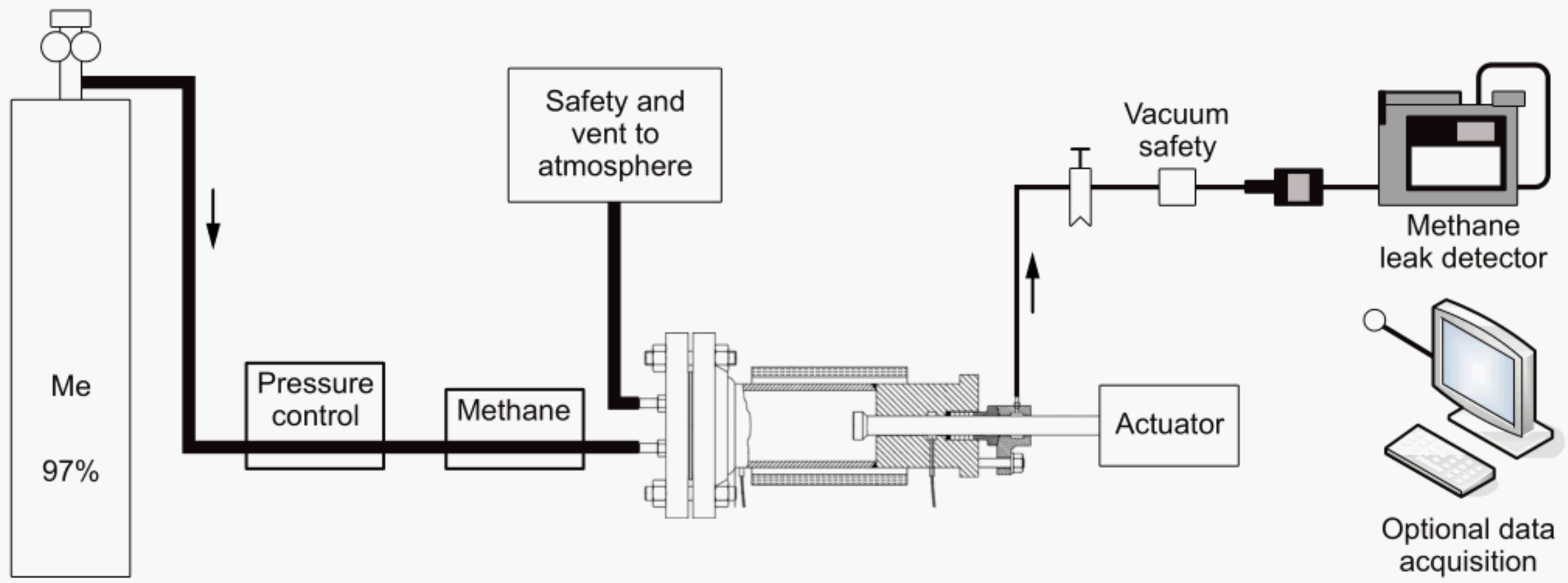

Figure 3—Emission Test Equipment Setup

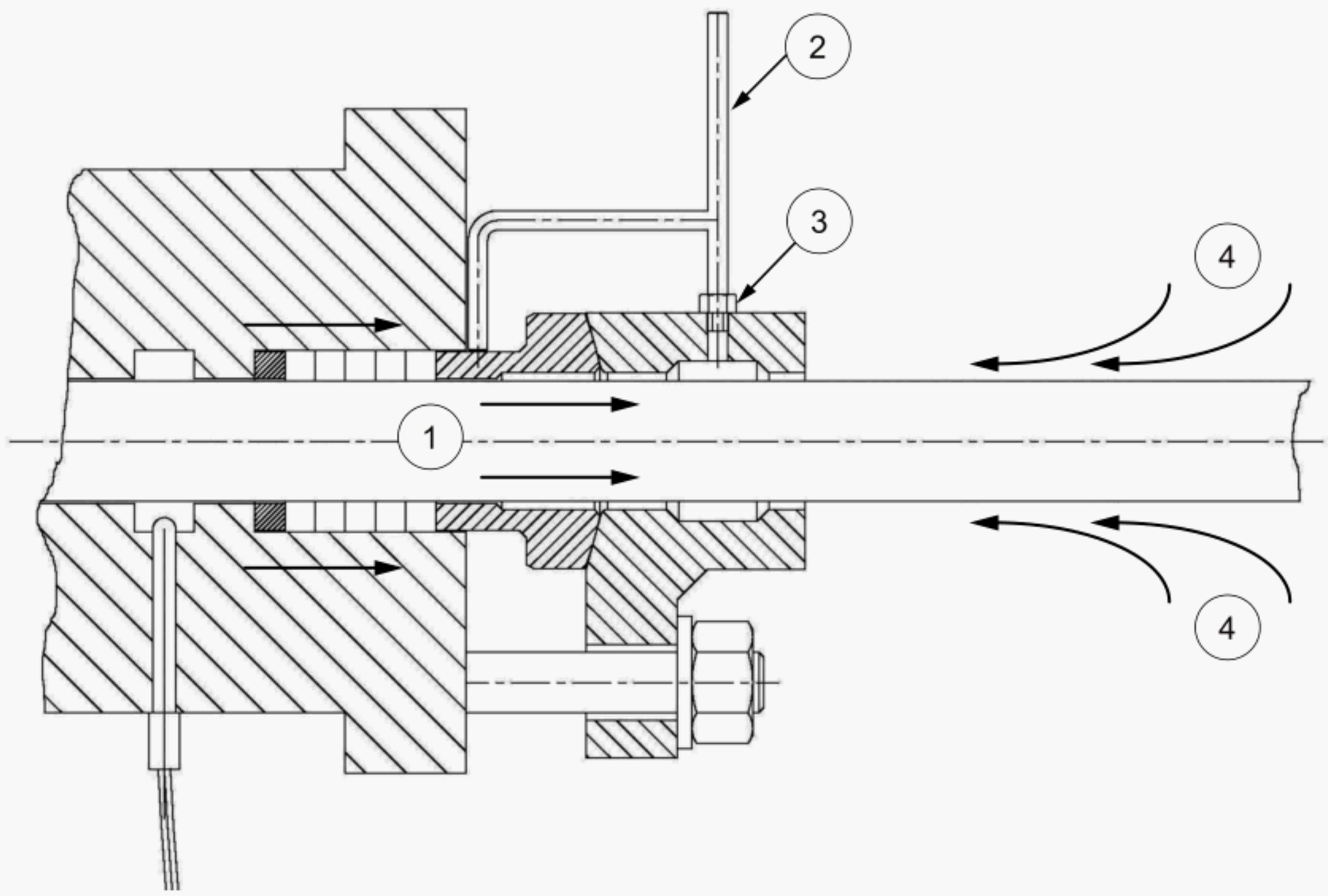

Key

1 Flow from parking area
2 Leak probe tubing for monitoring stem and gland OD leakage
3 Threaded connection
4 Flow from atmoshpere

Figure 4—Emission Test Fixture Detail

4.4.4.2 Mechanical cycling shall be discontinued during a necessary adjustment.

4.4.4.3 Adjustments shall be reported as packing gland bolt torque values and as measured by recording the change in clearance between the gland flange and the top of the bonnet (reference dimension A* per Figure 1 and Figure 4) or by a fixed height gauge. The gauge shall provide readout in 0.025 mm (0.001 in.) increments.

4.4.4.4 Flats of adjustment shall be indicated by use of a line marked on the gland flange and gland nuts at the start of the test.

4.4.4.5 The test should end if leakage exceeds 500 ppm after the one permitted adjustment.

4.4.5 Recording and Documentation

Fugitive emissions test results shall be provided on the Fugitive Emissions Test Report Summary provided in Annex A.1.

4.4.5.1 Leak measurements shall be recorded at the beginning of the test and at established intervals throughout the test, as required per Figure 2.

4.4.5.2 The packing adjustment shall be recorded and the cycle number noted along with the gland bolt torque prior to the adjustment. The gland bolt torque is for information only.

5 Corrosion Test

5.1 Corrosion Test Overview

The corrosion test provides methods for evaluation of “cold” and “hot” corrosion caused by the packing. It also provides a means for evaluating the effect of inhibitor systems and valve stem metallurgy combinations with respect to corrosion rate and weight loss.

5.2 Pre-Test Requirements

Packing sets submitted for corrosion testing shall have an accompanying materials analysis providing details for each style of packing contained in the set. Details shall include:

a) primary material used in manufacture,

b) type of corrosion inhibitor(s),

c) inhibitor content by weight,

d) method of application and distribution of inhibitors in or on the packing (such as active or passive), and

e) packing test specimen size shall be identical to that required for leak testing.

5.3 Ambient Corrosion Testing

5.3.1 The ambient corrosion testing vessel shall consist of an enclosure large enough for containment of several sample fixtures. The enclosure shall be equipped with a shelf or rack suspended above a liquid bath as shown in Figure 5.

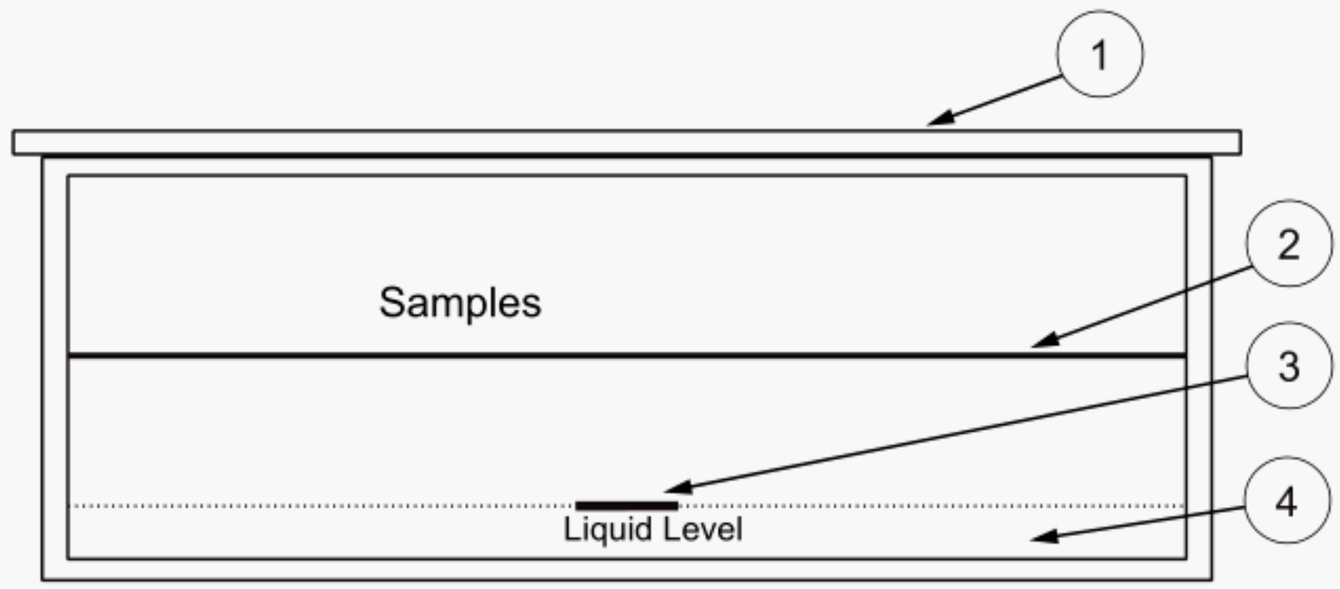

Key

1 Lid with perimeter seal
2 Shelf
3 Liquid level depth mark
4 Liquid level 1/2 in. deep

Figure 5—Corrosion Test Vessel

5.3.2 The compression fixture shall be as shown in Figure 6.

5.3.3 Prior to the start of corrosion testing, the compression fixture shall be:

a) cleaned in an ultrasonic acetone bath, and

b) adjusted so as to provide a 30 MPa (4350 psi) ± 0.69 Mpa (100 psi) compressive stress on the test packing.

5.3.4 Prior to assembly of test set, packing samples shall be wetted by soaking in de-mineralized water for 24 hours, creating a damp environment at ambient temperature, 22 °C ± 11 °C (72 °F ± 20 °F).

5.3.5 The test vessel shall be filled to a level of 1.27 cm (0.5 in.).

5.3.6 Test samples shall be assembled on the compression fixtures and placed into the ambient corrosion test vessel.

5.3.7 The test packing shall be installed around a test specimen (metal ring), representing the valve stem material being evaluated.

a) Sample steel rings shall be machined from metal rods having the same properties as the finished valve stem. A common material selection is 410 stainless steel (13 % Chrome).

b) Nominal dimensions of the machined sample shall be according to MSS SP-120.

c) Nominal finish shall be 0.4 μm R_a to 0.8 μm R_a (16 μ-in. R_a to 32 μ-in. R_a).

5.3.8 The duration of the test shall be 28 days.

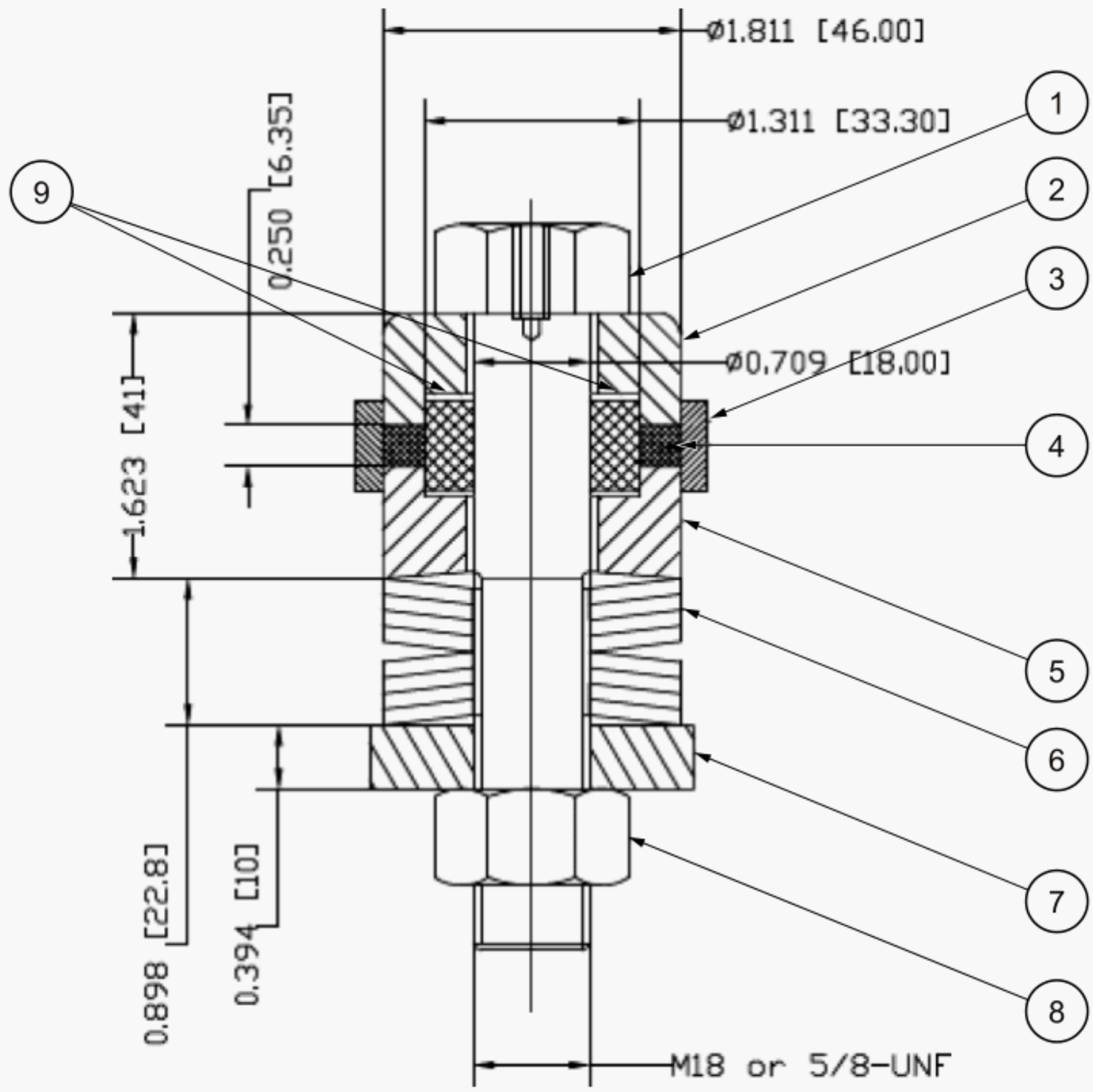

Key

1	bolt	6	disc spring
2	top housing	7	washer
3	packing retainer	8	nut
4	packing	9	metal test specimen
5	lower housing		

Figure 6—Compression Test Fixture

5.4 High Temperature Corrosion Testing

5.4.1 The high temperature corrosion test rig shall provide a heated chamber for multiple individual test fixtures containing samples of metal and packing. See Annex C and Figure C.1.

5.4.2 The housing shall be equipped with electric heating elements or a heater blanket that surrounds the outer periphery of the device, and allows for insertion of multiple test fixtures (see Figure 7 and Annex C).

5.4.3 Each test fixture shall be equipped with a vapor feed line, providing constant replenishment of fluid to the test samples.

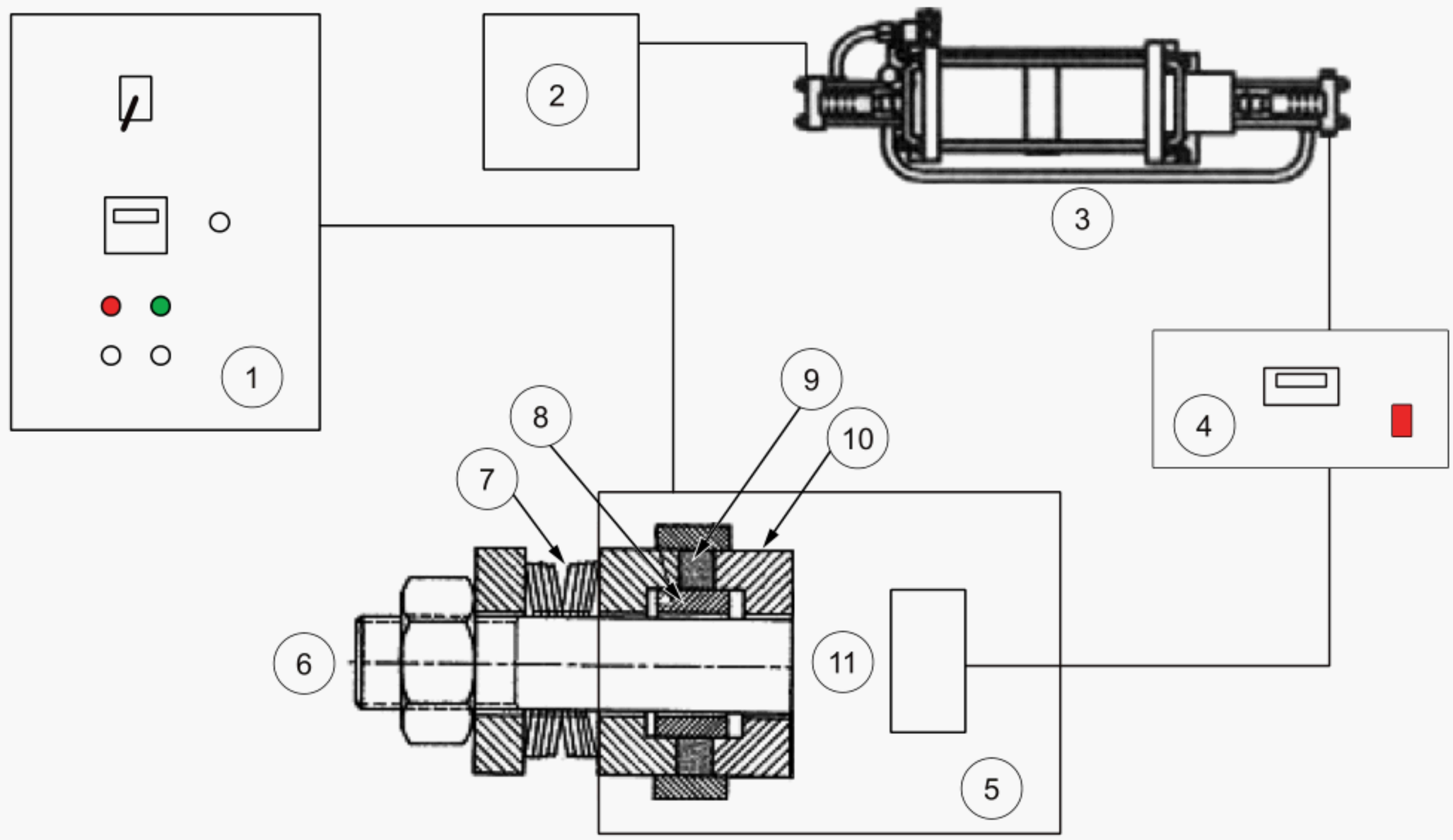

Key

1 Temperature control
2 Water
3 Booster pump
4 Pressure control
5 Heating system
6 Test rig
7 Disc springs
8 Test metal
9 packing ring sample
10 compression system
11 steam

Figure 7—High Temperature Corrosion Test System

5.4.4 Prior to the start of corrosion testing, the compression fixture shall be adjusted so as to provide a 30 Mpa (4350 psi) compressive stress on the test packing.

5.4.5 Packing samples shall be subjected to demineralized water at a test temperature of 149 °C ± 17 °C (300 °F ± 30 °F). The water pressure shall be maintained at 45 bar ± 2.25 bar (650 psig ± 32.5 psi).

5.4.6 The duration of the test shall be 35 days.

5.5 Corrosion Test Reporting

Corrosion test data shall be reported on the Corrosion Test Data Sheets provided in Annex A.2 and Annex A.3. The report shall include the following information:

a) photographic record of each sample at 100X and 200X magnification;

b) descriptive report on the estimated degree of stem and shaft pitting in ten percent increments of the surface area that shall include the mean pit depth and the maximum pit depth; and

c) descriptive report on the estimated degree of adhesion in ten percent increments of surface area.

6 Packing Materials Test

The packing materials test considers weight loss, density, lubricant content, and leachables as per the procedures outlined below. For new configurations, test packing shall be selected at random from a minimum production lot as supplied by the manufacturer. For existing configurations, test packing shall be provided by a blind selection of production product from the manufacturer's normal distribution network. Validation of the random or the blind selection of process shall be provided to the testing lab. Random selection does not apply to testing of prototype material.

6.1 Weight Loss Testing

6.1.1 Graphite Foil Weight Loss Test Procedure

Weight loss of graphite packing rings shall be determined as follows.

a) Conducted in a controlled environment using suitable testing equipment.

b) Flexible graphite sample size shall be between 0.5 grams and 3.5 grams.

c) Three samples shall be tested. Record weight of each sample.

d) Samples shall be preconditioned for one hour at 150 °C (302 °F) with a ramp up speed of 10 °C (18 °F) per minute. Record dried sample weight and use for weight loss percentage calculations.

e) After one hour, the samples shall continue ramping up at 10 °C (18 °F) per minute to the final test temperature of 593 °C (1100 °F) ± 2 °C (3.6 °F).

f) This test temperature shall be held for 24 hours and then cooled.

g) Weigh samples after cooling and record weight.

NOTE TGA testers have the capability to weigh samples without being removed from the heat source. This is an acceptable alternative to cooling and weighing.

h) Determine the percent weight loss of each sample and record.

i) Average the results and a weight loss greater than 15 % is not acceptable.

NOTE This test method also follows an established testing standard, FSA-G-604-07 Method B, issued by the Fluid Sealing Association.

6.1.2 Braided Packing Ring Weight Loss Test Procedure

Weight loss of braided packing rings shall be determined as follows.

a) Conducted in an oven with full exposure to air (Oxygen-rich environment).

b) Select three test rings of a sample packing set. If the packing set is comprised of more than one type of packing ring, each type shall be tested.

c) Record weight.

d) Preheat oven to 150 °C (300 °F).

e) Place sample in oven for one hour.

f) Remove samples, cool to room temperature, and record weight.

g) Increase oven temperature to 260 °C (500 °F) and repeat step e and step f.

h) Increase temperature to 538 °C in 56 °C (1000 °F in 100 °F) increments, repeating step e and step f after each increase.

i) Discontinue test if weight loss exceeds 50 %.

6.2 Density

Packing Density shall be determined by dividing the sample weight by the sample volume, with the sample volume determined as follows:

a) Braided packing volume shall be determined by measuring the sample length, width and thickness.

$$\text{Volume} = \text{Median Length} \times \text{Width} \times \text{Thickness}$$

b) Die-formed packing (ring form) volume shall be determined by the following equation:

$$\text{Volume} = [(\text{Ring OD}^2 - \text{Ring ID}^2) \times \text{Ring Thickness} \times \pi] / 4$$

where

OD is the outside diameter;

ID is the inside diameter.

6.3 Lubricant Content

6.3.1 Polytetrafluoroethylene (PTFE) Content

PTFE content shall be established by determining the percentage total fluorine in the packing, and comparing with a base fluorine percentage of 76, as follows:

a) determine total percent of fluorine content using ASTM D1179 or ASTM D4327, and

b) divide total percent of fluorine as obtained in a) by 0.76 to obtain the approximate percent of PTFE content.

6.3.2 Wet Lubricant

Wet lubricant percentage shall be determined by dividing the “weight of the lubricant extract” by the “original sample weight” and multiplying by 100. The procedure shall be as follows.

a) Cut samples into short lengths, and record the total sample weight (approximately 15 grams is required).

b) Place cut samples into an extraction thimble and insert thimble into Soxhlet extraction unit that is nearly filled with a solvent, such as methylene chloride.

c) Turn on water flow through the condenser and bring the methylene chloride to a moderate boil through the use of the “low” setting on a hot plate. Extract for approximately 16 hours.

d) Record the weight of a dry evaporation dish.

e) Pour the Methylene Chloride extract solution into the dry evaporating dish and evaporate over a steam bath. Continue to pour the extract solution from the flasks into the dish until all the methylene chloride has been evaporated.

f) Place the evaporation dish in a hot-air oven set between 100 °C to 121 °C (212 °F to 250 °F) for 30 minutes. Cool the evaporation dish to room temperature in a desiccator.

g) Record the weight of the evaporation dish and lubricant extract.

h) Calculate the lubricant weight by subtracting the weight of the dry evaporation dish in step d) from the combined weight in step g).

NOTE A reference test method for Soxhlet Extraction can be found in ASTM C613.

6.4 Leachables

Leachables testing shall be per the following:

a) packing submitted for testing shall contain a corrosion inhibitor;

b) Chloride testing shall be per ASTM D512;

c) Leachable Fluoride testing shall be per ASTM D1179 or ASTM D4327; and

d) proof of testing and analysis shall be maintained and provided with the final test report.

6.5 Packing Materials Test Reporting

Packing Materials Test data shall be reported on the Material Test Data Sheet per Annex A.4.

Annex A
(normative)

Test Forms

A.1 Fugitive Emissions Test Report Summary

Record testing data and readings from section 4.4 on this form.

Table A.1—Fugitive Emissions Test Report Summary

API Standard 622 **Fugitive Emissions Test Report Number** _____

Application Profile: Check One ☐ Rotating Rising ☐ Rising	Manufacturer: _____ Description: _____ _____
Testing Facility: _____ Technician: _____ Witness: _____ Start Date: _____ Completion: _____	Source: _____ Date: _____ ☐ Manufacturer ☐ Distributor Packaged: _____ Indicate New or Current: ☐ New ☐ Current

Gland Load:	Gland Nut Torque:
Information: psi _____	lbf-ft _____ lbf-in. _____
kPa _____	Nm _____

Notes concerning installation instructions: _____

_____

_____

Testing Profile Details (Testing Data)

Test Segment	Leak Measurement Static	Temperature	Reference Temperature at Packing Gland	Flats Adjusted-Gland Nut Torque lbf-ft and Reference A Height		
Day 1 Start, Ambient 0 – 150 cycles P = _____	_____ _____ _____ _____ _____	_____ _____ _____ _____ _____	_____ _____ _____ _____ _____	_____ _____ _____ _____ _____	_____ _____ _____ _____ _____	_____ _____ _____ _____ _____
Elevated Temperature 151 – 300 cycles P = _____	_____ _____ _____ _____ _____	_____ _____ _____ _____ _____	_____ _____ _____ _____ _____	_____ _____ _____ _____ _____	_____ _____ _____ _____ _____	_____ _____ _____ _____ _____

Test Segment	Leak Measurement Static	Temperature	Reference Temperature at Packing Gland	Flats Adjusted-Gland Nut Torque lbf-ft and Reference A Height		
Day 2 Start, Ambient 301 – 450 cycles P = _____	_____ _____ _____ _____ _____	_____ _____ _____ _____ _____	_____ _____ _____ _____ _____	_____ _____ _____ _____ _____	_____ _____ _____ _____ _____	_____ _____ _____ _____ _____
Elevated Temperature 451 – 600 cycles P = _____	_____ _____ _____ _____ _____	_____ _____ _____ _____ _____	_____ _____ _____ _____ _____	_____ _____ _____ _____ _____	_____ _____ _____ _____ _____	_____ _____ _____ _____ _____
Day 3 Start, Ambient 601 – 750 cycles P = _____	_____ _____ _____ _____ _____	_____ _____ _____ _____ _____	_____ _____ _____ _____ _____	_____ _____ _____ _____ _____	_____ _____ _____ _____ _____	_____ _____ _____ _____ _____
Elevated Temperature 751 – 900 cycles P = _____	_____ _____ _____ _____ _____	_____ _____ _____ _____ _____	_____ _____ _____ _____ _____	_____ _____ _____ _____ _____	_____ _____ _____ _____ _____	_____ _____ _____ _____ _____
Day 4 Start, Ambient 901 – 1050 cycles P = _____	_____ _____ _____ _____ _____	_____ _____ _____ _____ _____	_____ _____ _____ _____ _____	_____ _____ _____ _____ _____	_____ _____ _____ _____ _____	_____ _____ _____ _____ _____
Elevated Temperature 1051 – 1200 cycles P = _____	_____ _____ _____ _____ _____	_____ _____ _____ _____ _____	_____ _____ _____ _____ _____	_____ _____ _____ _____ _____	_____ _____ _____ _____ _____	_____ _____ _____ _____ _____
Day 5 Start, Ambient 1201 – 1350 cycles P = _____	_____ _____ _____ _____ _____	_____ _____ _____ _____ _____	_____ _____ _____ _____ _____	_____ _____ _____ _____ _____	_____ _____ _____ _____ _____	_____ _____ _____ _____ _____
Elevated Temperature 1351 – 1500 cycles P = _____	_____ _____ _____ _____ _____	_____ _____ _____ _____ _____	_____ _____ _____ _____ _____	_____ _____ _____ _____ _____	_____ _____ _____ _____ _____	_____ _____ _____ _____ _____

Test Segment	Leak Measurement Static	Temperature	Reference Temperature at Packing Gland	Flats Adjusted-Gland Nut Torque lbf-ft and Reference A Height		
Day 6 Start, Ambient 1501 – 1510 cycles P = _____	_____ _____ _____ _____ _____	_____ _____ _____ _____ _____	_____ _____ _____ _____ _____	_____ _____ _____ _____ _____	_____ _____ _____ _____ _____	_____ _____ _____ _____ _____

Emissions Testing Report Summary	
Test Number:	Test Date:
Packing Material:	Style Number:
Packing Manufacturer:	Source of Sample:
Test Packing Cross-section:	Laboratory Name:
	Location of Test:
Packing Gland OD and ID (at the packing): OD = ID =	Packing Gland Bolt Diameter = Packing Material:
Number of Mechanical Cycles:	Packing Compression % of Free Height =
Gland Load:	Torque on Gland Nuts (each side) = _____/_____ as installed
Number of Thermal Cycles:	Mechanical Cycles Prior to Readjustment:
Maximum Test Pressure:	Gland Nut Torque before readjustment:
Packing Configuration: Number of rings tested: Check the following: ☐ Ring shape (square, circular, vee) ☐ Solid or split ☐ Braided ☐ Die formed ☐ Spool stock ☐ Wire or other reinforcement ☐ Corrosion inhibitor and type ☐ Other: _____	Show Sketch of Packing Installation-define each ring:

A.2 Ambient Temperature Corrosion Test Data Sheet

Record testing data and results from section 5.3 on this form.

Table A.2—Ambient Temperature Corrosion Test Data Sheet

API Standard 622 Ambient Corrosion Testing: Materials Qualification and Functional Testing Report

Product Manufacturer:	Materials Analysis: Laboratory: _____ Test Number:_____	Date: _____
Pre-Qualification Analysis Information		
Primary Material of Manufacture:	Corrosion Inhibitor(s)	Inhibitor Volume by Weight
Corrosion Testing Facility:	Test Technician:	Date Start/Complete:
Ambient Corrosion Testing:	Load Stress:	S_____ C_____
Metal Sample Description	Observations	
1.		S_____ C_____
2.		S_____ C_____
3.		S_____ C_____
4.		S_____ C_____
5.		S_____ C_____
6.		S_____ C_____
7.		S_____ C_____
8.		S_____ C_____
All reports shall include the following: 1. Microscopic view photographic record of results. Magnification levels of 100X and 200X. 2. Descriptive report on the degree of stem and shaft pitting that occurred: a. percent of surface area pitting in 10 % increments, and b. the mean and maximum pit depth. 3. Descriptive report on the degree of adhesion in 10 % increments of surface area.		
A schematic of the actual test vessel shall be provided. For tests having greater numbers of samples than provided for on this form, the testing lab shall fill in a separate form for each sample tested.		

A.3 High Temperature Corrosion Test Data Sheet

Record testing data and results from section 5.4 on this form.

Table A.3—High Temperature Corrosion Test Data Sheet

API Standard 622 **High Temperature Corrosion Testing: Materials Qualification and Functioning Testing Report**

Product Manufacturer:	Materials Analysis: Laboratory: _____ Test Number:_____	Date: _____
Pre-Qualification Analysis Information		
Primary Material of Manufacture:	Corrosion Inhibitor(s):	Inhibitor Volume by Weight:
Corrosion Testing Facility:	Test Technician:	Date Start/Complete:
Ambient Corrosion Testing:	Load Stress:	S_____ C_____
Metal Sample Description	Observations	
1.		S_____ C_____
2.		S_____ C_____
3.		S_____ C_____
4.		S_____ C_____
5.		S_____ C_____
6.		S_____ C_____
7.		S_____ C_____
8.		S_____ C_____
All reports shall include the following: 1. Microscopic view photographic record of results. Magnification levels of 100X and 200X. 2. Descriptive report on the degree of stem and shaft pitting that occurred: a. percent of surface area pitting in 10 % increments, and b. the mean and maximum pit depth 3. Descriptive report on the degree of adhesion in 10 % increments of surface area.		
A schematic of the actual test vessel shall be provided. For tests having greater numbers of samples than provided for on this form, the testing lab shall fill in a separate form for each sample tested.		

A.4 Materials Test Report

Record testing data and readings from Section 6 on this form.

Table A.4—Material Test Report

API Standard 622 **Graphite Foil Test Report**

Testing Laboratory:		Technician:	Date:
Product Name/Model:	Base Composition of Material: ☐ Graphite Purity ☐ Ash Content ☐ Sulphur ☐ Chloride ☐ Fluoride ☐ Corrosion Inhibitor ☐ Oxidation Inhibitor	Source: ☐ Manufacturer ☐ Distributor Nominal Thickness Density	Date:
Indicate New or Current Product:	☐ New ☐ Current		

Graphite Weight Loss (TGA) Testing	
Measurement Equipment Name and Manufacturer(s):	
Calibration Dates on TGA:	
Start Sample Weight: Sample # 1	Initial Sample Weight:
Weight after 1 hour preconditioning at 150 °C (302 °F).	Dried Sample Weight: Variation, weight _____% of initial weight
Weight after 24 hours at 593 °C (1100 °F).	Final Sample Weight: Variation, weight _____% of dried sample weight
Start Sample Weight: Sample # 2	Initial Sample Weight:
Weight after 1 hour preconditioning at 150 °C (302 °F).	Dried Sample Weight: Variation, weight _____% of initial weight
Weight after 24 hours at 593 °C (1100 °F).	Final Sample Weight: Variation, weight _____% of dried sample weight
Start Sample Weight: Sample # 3	Initial Sample Weight:
Weight after 1 hour preconditioning at 150 °C (302 °F).	Dried Sample Weight: Variation, weight _____% of initial weight
Weight after 24 hours at 593 °C (1100 °F).	Final Sample Weight: Variation, weight _____% of dried sample weight
Average weight loss of three samples.	Variation, weight _____% of initial weight

Packing Materials Test Report (separate test report required for different packing ring requirements)			
Testing Laboratory:		Technician:	Date:
Product Name/Model:	Base Composition of Material:	Source: ☐ Manufacturer ☐ Distributor Packaged:	Date:
Indicate New or Current Product:	☐ New ☐ Current	Description of Product: ☐ Die-formed ☐ Braided ☐ Other:	
Weight Loss (Oven) Testing:			
Measurement Equipment Name and Manufacturer(s):			
Calibration Dates on Oven Recorders:			
Calibration Dates on Weighing Equipment:			
Start Sample Weight:			
Weight after one hour at 149 °C (300 °F).		Variation, weight _____%_____	
Weight after one hour at 260 °C (500 °F).		Variation, weight _____%_____	
Weight after one hour at 315 °C (600 °F).		Variation, weight _____%_____	
Weight after one hour at 371 °C (700 °F).		Variation, weight _____%_____	
Weight after one hour at 427 °C (800 °F).		Variation, weight _____%_____	
Weight after one hour at 482 °C (900 °F).		Variation, weight _____%_____	
Weight after one hour at 538 °C (1000 °F).		Variation, weight _____%_____	

Packing Density			
Calibration Date:		Braided Construction Volume: V_{bc} = Median L × W × T	
Sample Weight:		Die Formed Packing Ring Volume: $V_{df} = [(OD^2 - ID^2) \times \text{Thickness} \times \pi] / 4$	
Density = Sample Weight / Sample Volume =			
Lubricant Content:			
Packing Lubricant Content:		Volume Percentage:	
Leachables:			
ASTM D 512 Chlorides	Value:	Lab Name:	Date:
ASTM D 1179 or ASTM D 4327 Fluorides	Value:	Lab Name:	Date:
Corrosion Inhibitor:		Type(s):	
Certification of Selected Process:			
New Configurations:		Existing Configurations:	
Validation of Random Selection: ☐ Yes ☐ No Lot Size: Signature:		Validation of Random Selection Distributor: Signature:	

Annex B
(normative)

Emissions Test Fixture Construction

B.1 The test fixture shall be constructed to simulate a Class 300 DN 100 (NPS4) block valve.

B.2 Flanges shall be carbon steel, Class 300 DN 100 (NPS4) per ASME B16.5 Table F2-1.1 minimum.

B.3 Gaskets shall be spiral wound type, DN 100 (4 in.) Class 300 per ASME B16.20 with flexible graphite.

B.4 The body of the test fixture shall be made from NPS4 carbon steel seamless pipe having schedule 80 minimum pipe schedule or from A-105 or other suitable carbon steel materials.

B.5 The body of the assembly shall provide sufficient clearance to enable movement of the shaft, of 0.19 m (7.62 in.), minimum.

B.6 The packing gland shall be ASTM A216 Grade WCB or from A-105 or other suitable carbon steel materials.

B.7 Stem shall be ASTM A182 Grade F6a Rc15-28.8 (200-275 HB).

B.8 Gland bolts and studs: ASTM A193 Grade B7.

B.9 Gland nuts: ASTM A194 Grade 2H.

B.10 Heating shall be provided by external heating blankets or coils.

B.11 Insulation may be applied to the body, flanges and gland areas.

B.12 A primary measurement thermocouple shall be positioned to monitor temperature of the fixture body.

B.13 A reference measurement thermocouple shall be positioned as dimensioned in Figure B.1.

B.14 The emissions measuring equipment shall be coupled to the modified gland (flange) using flexible tubing with an identical inside diameter as that of the detection probe tubing supplied with the detector.

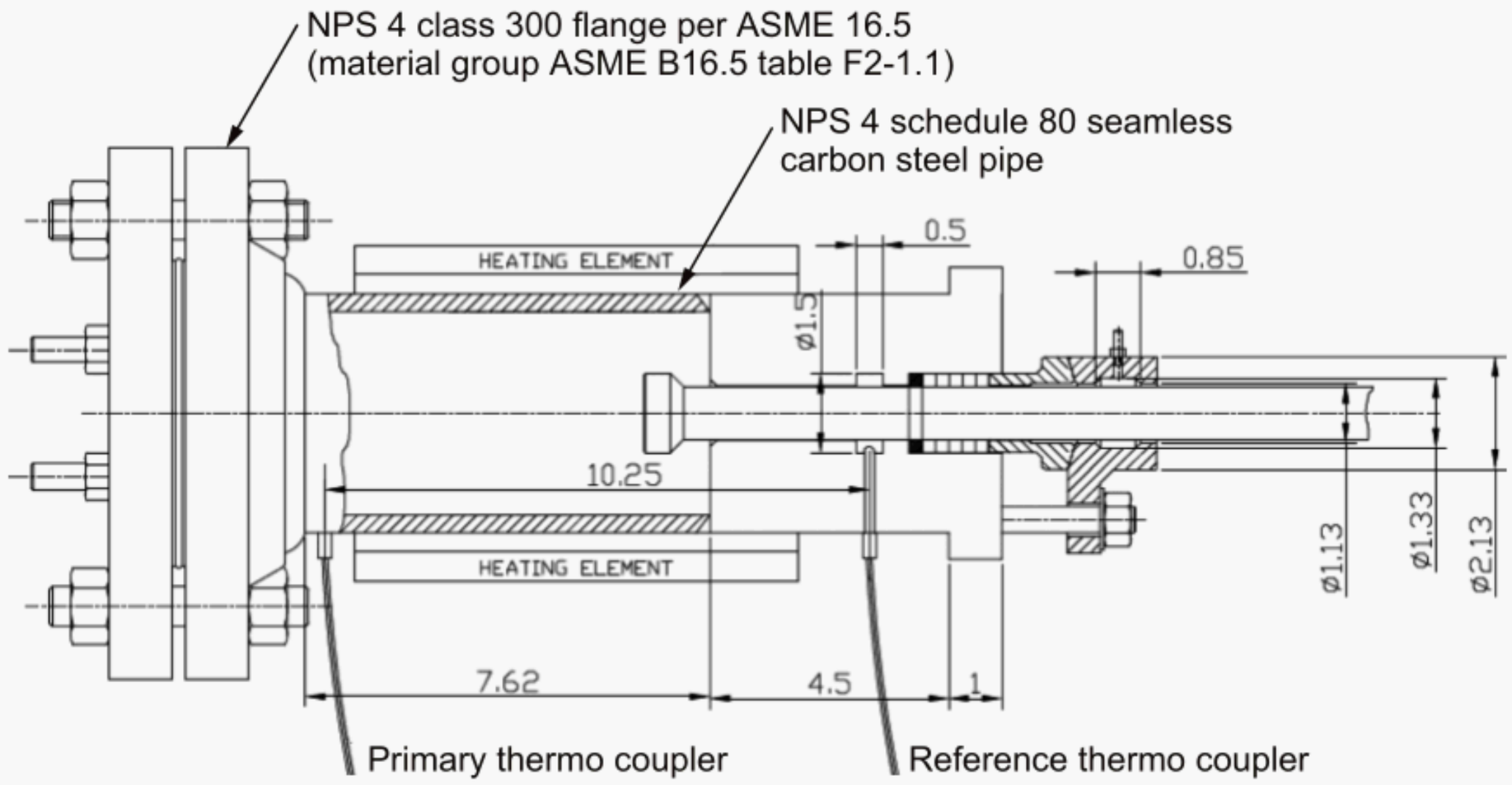

Figure B.1—Emissions Test Fixture

Annex C
(normative)

High Temperature Corrosion Test Fixture Construction

C.1 The fixture may be constructed to allow for multiple test assemblies.

C.2 The fixture design shall be designed to accommodate a single ring of packing having a 6.35 mm (0.250 in.) square cross-section.

C.3 The fixture housing shall be fabricated from ASTM A216 Grade WCB.

C.4 The fixture bolt(s) shall be ASTM A182 Grade F6a Rc15-28.8 (200-275 HB).

C.5 Fixture nut(s) shall be ASTM A194 Grade 2H.

C.6 Compression gland load nut shall be ASTM A216 Grade WCB.

C.7 Compression gland top piece shall be ASTM A216 Grade WCB.

C.8 A buffer seal washer shall be located between the housing and pressurization housing.

C.9 The fixture shall be equipped with a fluid flow transition fitting which shall be fabricated from ASTM A216 Grade WCB.

C.10 Belleville washers shall be used to maintain a compressive load of 30 Mpa (4350 psi).

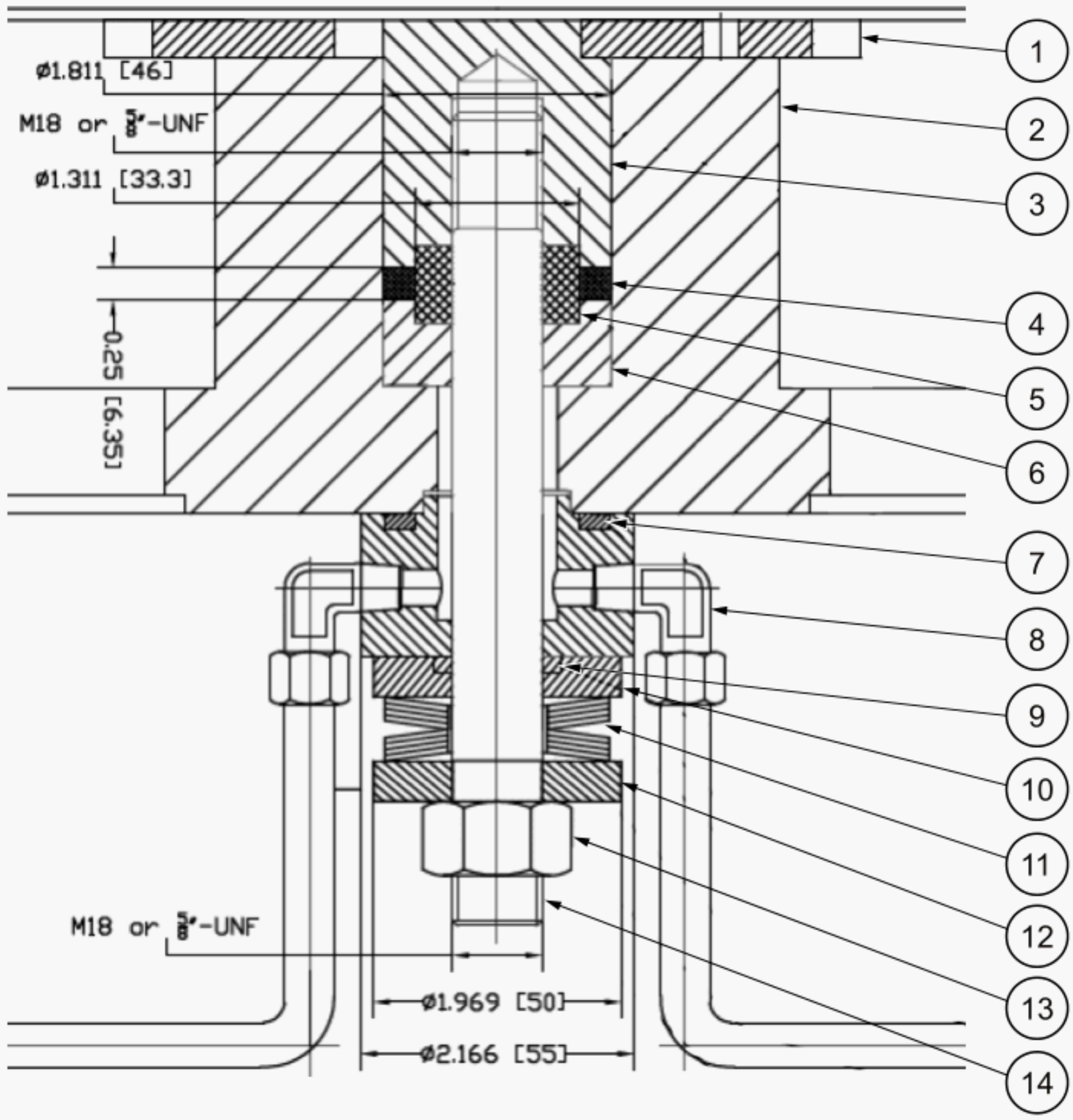

Key

1 housing retainer
2 fixture housing
3 compression gland bottom piece
4 packing sample
5 metal test sample
6 compression gland top piece
7 seal
8 tubing and fittings
9 seal
10 washer
11 disc springs
12 washer
13 nut
14 bolt/shaft

Figure C.1—High Temperature Corrosion Test Fixture

energy API

AMERICAN PETROLEUM INSTITUTE

2011 PUBLICATIONS ORDER FORM

Effective January 1, 2011. API Members receive a 30% discount where applicable. The member discount does not apply to purchases made for the purpose of resale or for incorporation into commercial products, training courses, workshops, or other commercial enterprises.

Online Orders **www.api.org/pubs**
Phone Orders **1-800-854-7179** (Toll-free in the U.S. and Canada) | **(+1) 303-397-7956** (Local and International)
Fax Orders **(+1) 303-397-2740**

Date: _____ ☐ **API Member** (Check if Yes)

Invoice To (☐ Check here if same as "Ship To")

Name:
Title:
Company:
Department:
Address:
City: State/Province:
Zip/Postal Code: Country:
Telephone:
Fax:
Email:

Ship To (UPS will not deliver to a P.O. Box)

Name:
Title:
Company:
Department:
Address:
City: State/Province:
Zip/Postal Code: Country:
Telephone:
Fax:
Email:

Quantity	Title	SO★	Unit Price	Total
	Std 599, Metal Plug Valves-Flanged, Threaded and Welding Ends		$78.00	
	Std 600, Steel Gate Valves: Flanged and Butt-welding Ends, Bolted Bonnets		$155.00	
	Std 602, Steel Gate, Globe, and Check Valves for Sizes DN 100 and Smaller for the Petroleum and Natural Gas Industries		$106.00	
	Std 603, Corrosion-Resistant, Bolted Bonnet Gate Valves: Flanged and Butt-Welding Ends		$72.00	
	Std 607, Fire Test for Quarter-turn Valves and Valves Equipped with Non-Metallic Seats		$81.00	
	Std 608, Metal Ball Valves: Flanged, Threaded and Butt-Welding Ends		$95.00	
	Std 609, Butterfly Valves: Double Flanged, Lug- and Wafer-Type		$76.00	

Subtotal	
Applicable Sales Tax (see below)	
Rush Shipping Fee (see below)	
Shipping and Handling (see below)	
Total (in U.S. Dollars)	

☐ Payment Enclosed ☐ P.O. No. (Enclose Copy) _____

☐ Charge My IHS Account No. _____

☐ VISA ☐ MasterCard ☐ American Express
☐ Diners Club ☐ Discover

Credit Card No.:

Print Name (As It Appears on Card):

Expiration Date:

Signature:

★ To be placed on Standing Order for future editions of this publication, place a check mark in the SO column and sign here:

Pricing and availability subject to change without notice.

Mail Orders – Payment by check or money order in U.S. dollars is required except for established accounts. State and local taxes, $10 processing fee, and 5% shipping must be added. Send mail orders to: **API Publications, IHS, 15 Inverness Way East, c/o Retail Sales, Englewood, CO 80112-5776, USA.**

Purchase Orders – Purchase orders are accepted from established accounts. Invoice will include actual freight cost, a $10 processing fee, plus state and local taxes.

Telephone Orders – If ordering by telephone, a $10 processing fee and actual freight costs will be added to the order.

Sales Tax – All U.S. purchases must include applicable state and local sales tax. Customers claiming tax-exempt status must provide IHS with a copy of their exemption certificate.

Shipping (U.S. Orders) – Orders shipped within the U.S. are sent via traceable means. Most orders are shipped the same day. Subscription updates are sent by First-Class Mail. Other options, including next-day service, air service, and fax transmission are available at additional cost. Call 1-800-854-7179 for more information.

Shipping (International Orders) – Standard international shipping is by air express courier service. Subscription updates are sent by World Mail. Normal delivery is 3-4 days from shipping date.

Rush Shipping Fee – Next Day Delivery orders charge is $20 in addition to the carrier charges. Next Day Delivery orders must be placed by 2:00 p.m. MST to ensure overnight delivery.

Returns – All returns must be pre-approved by calling the IHS Customer Service Department at 1-800-624-3974 for information and assistance. There may be a 15% restocking fee. Special order items, electronic documents, and age-dated materials are non-returnable.

THERE'S MORE WHERE THIS CAME FROM.

API Monogram® Licensing Program
Sales: (+1) 713-964-2662
Service: (+1) 202-962-4791
Fax: (+1) 202-682-8070
Email: certification@api.org
Web: www.api.org/monogram

API Quality Registrar (APIQR®)
- ISO 9001
- ISO/TS 29001
- ISO 14001
- OHSAS 18001
- API Spec Q1®
- API QualityPlus®
- Dual Registration

Sales: (+1) 713-964-2662
Service: (+1) 202-962-4791
Fax: (+1) 202-682-8070
Email: certification@api.org
Web: www.api.org/apiqr

API Individual Certification Programs (ICP®)
Sales: (+1) 713-964-2662
Service: (+1) 202-682-8064
Fax: (+1) 202-682-8348
Email: icp@api.org
Web: www.api.org/icp

API Engine Oil Licensing and Certification System (EOLCS)
Sales: (+1) 713-964-2662
Service: (+1) 202-682-8516
Fax: (+1) 202-962-4739
Email: eolcs@api.org
Web: www.api.org/eolcs

API Training Provider Certification Program (API TPCP™)
Sales: (+1) 713-964-2662
Service: (+1) 202-682-8075
Fax: (+1) 202-682-8070
Email: tpcp@api.org
Web: www.api.org/tpcp

API Perforator Design Registration Program
Sales: (+1) 713-964-2662
Service: (+1) 202-682-8490
Fax: (+1) 202-682-8070
Email: perfdesign@api.org
Web: www.api.org/perforators

API Credit Exchange (ACE™)
Service: (+1) 202-682-8192
Fax: (+1) 202-682-8070
Email: exchange@api.org
Web: www.api.org/ace

API Diesel Exhaust Fluid Certification Program
Phone: (+1) 202-682-8516
Fax: (+1) 202-962-4739
Email: info@apidef.org
Web: www.apidef.org

API WorkSafe™
Sales: (+1) 713-964-2662
Service: (+1) 202-682-8469
Fax: (+1) 202-682-8348
Email: apiworksafe@api.org
Web: www.api.org/worksafe

API-U
Phone: (+1) 202-682-8053
Fax: (+1) 202-682-8070
Email: training@api.org
Web: www.api-u.org

API Data™
Phone: (+1) 202-682-8499
Fax: (+1) 202-962-4730
Email: apidata@api.org
Web: www.APIDataNow.org

API Publications
Online: www.api.org/pubs
Phone: 1-800-854-7179
(Toll-free: U.S./Canada)
(+1) 303-397-7956
(Local/International)
Fax: (+1) 303-397-2740

API Standards
Phone: (+1) 202-682-8148
Fax: (+1) 202-962-4797
Email: standards.org
Web: www.api.org/standards

Request a Quotation: www.api.org/quote

AMERICAN PETROLEUM INSTITUTE

1220 L Street, NW
Washington, DC 20005-4070
USA

202-682-8000

Additional copies are available online at www.api.org/pubs

Phone Orders:	1-800-854-7179	(Toll-free in the U.S. and Canada)
	303-397-7956	(Local and International)
Fax Orders:	303-397-2740	

Information about API publications, programs and services is available on the web at www.api.org.

Product No. C62202