Corrosion-resistant, Bolted Bonnet Gate Valves—Flanged and Butt-welding Ends

API STANDARD 603
EIGHTH EDITION, FEBRUARY 2013

energy API®

AMERICAN PETROLEUM INSTITUTE

Copyright American Petroleum Institute
Provided by IHS under license with API
No reproduction or networking permitted without license from IHS

Not for Resale

Special Notes

API publications necessarily address problems of a general nature. With respect to particular circumstances, local, state, and federal laws and regulations should be reviewed.

Neither API nor any of API's employees, subcontractors, consultants, committees, or other assignees make any warranty or representation, either express or implied, with respect to the accuracy, completeness, or usefulness of the information contained herein, or assume any liability or responsibility for any use, or the results of such use, of any information or process disclosed in this publication. Neither API nor any of API's employees, subcontractors, consultants, or other assignees represent that use of this publication would not infringe upon privately owned rights.

API publications may be used by anyone desiring to do so. Every effort has been made by the Institute to assure the accuracy and reliability of the data contained in them; however, the Institute makes no representation, warranty, or guarantee in connection with this publication and hereby expressly disclaims any liability or responsibility for loss or damage resulting from its use or for the violation of any authorities having jurisdiction with which this publication may conflict.

API publications are published to facilitate the broad availability of proven, sound engineering and operating practices. These publications are not intended to obviate the need for applying sound engineering judgment regarding when and where these publications should be utilized. The formulation and publication of API publications is not intended in any way to inhibit anyone from using any other practices.

Any manufacturer marking equipment or materials in conformance with the marking requirements of an API standard is solely responsible for complying with all the applicable requirements of that standard. API does not represent, warrant, or guarantee that such products do in fact conform to the applicable API standard.

Users of this Standard should not rely exclusively on the information contained in this document. Sound business, scientific, engineering, and safety judgment should be used in employing the information contained herein.

All rights reserved. No part of this work may be reproduced, translated, stored in a retrieval system, or transmitted by any means, electronic, mechanical, photocopying, recording, or otherwise, without prior written permission from the publisher. Contact the Publisher, API Publishing Services, 1220 L Street, NW, Washington, DC 20005.

Copyright © 2013 American Petroleum Institute

--`,,```,,,,``` -`-`,,`,,`,`,,`---

Copyright American Petroleum Institute
Provided by IHS under license with API
No reproduction or networking permitted without license from IHS

Not for Resale

Foreword

Nothing contained in any API publication is to be construed as granting any right, by implication or otherwise, for the manufacture, sale, or use of any method, apparatus, or product covered by letters patent. Neither should anything contained in the publication be construed as insuring anyone against liability for infringement of letters patent.

Shall: As used in a standard, “shall” denotes a minimum requirement in order to conform to the specification.

Should: As used in a standard, “should” denotes a recommendation or that which is advised but not required in order to conform to the specification.

This document was produced under API standardization procedures that ensure appropriate notification and participation in the developmental process and is designated as an API standard. Questions concerning the interpretation of the content of this publication or comments and questions concerning the procedures under which this publication was developed should be directed in writing to the Director of Standards, American Petroleum Institute, 1220 L Street, NW, Washington, DC 20005. Requests for permission to reproduce or translate all or any part of the material published herein should also be addressed to the director.

Generally, API standards are reviewed and revised, reaffirmed, or withdrawn at least every five years. A one-time extension of up to two years may be added to this review cycle. Status of the publication can be ascertained from the API Standards Department, telephone (202) 682-8000. A catalog of API publications and materials is published annually by API, 1220 L Street, NW, Washington, DC 20005.

Suggested revisions are invited and should be submitted to the Standards Department, API, 1220 L Street, NW, Washington, DC 20005, standards@api.org.

--`,,```,,,,```-`-`,,`,,`,`,,`---
Copyright American Petroleum Institute
Provided by IHS under license with API
No reproduction or networking permitted without license from IHS
Not for Resale

Copyright American Petroleum Institute
Provided by IHS under license with API
No reproduction or networking permitted without license from IHS
Not for Resale

Contents

Page

1 Scope . . . 1

2 Normative References. . . . 1

3 Terms and Definitions . . . 3

4 Pressure/Temperature Ratings . . . 4

5 Design . . . 4
5.1 General . . . 4
5.2 Bonnet Wall Thickness . . . 5
5.3 Body Dimensions . . . 6
5.4 Bonnet Dimensions. . . . 6
5.5 Bonnet-to-body Joint . . . 7
5.6 Gate . . . 8
5.7 Yoke. . . . 10
5.8 Stem and Stem Nut . . . 10
5.9 Packing and Packing Box. . . . 11
5.10 Bolting. . . . 12
5.11 Operation . . . 13
5.12 Bypasses and Other Auxiliary Connections . . . 13

6 Materials . . . 14
6.1 Materials Other Than Trim Materials . . . 14
6.2 Trim . . . 15

7 Testing, Inspection, and Examination . . . 15
7.1 Inspection and Examination. . . . 15
7.2 Pressure Tests . . . 15
7.3 Repairs of Defects . . . 15
7.4 Supplementary Requirements . . . 15

8 Marking . . . 15
8.1 General . . . 15
8.2 Marking for Unidirectional Valves . . . 16

9 Preparation for Shipment . . . 16
9.1 Coatings . . . 16
9.2 Openings . . . 16
9.3 Gate Position . . . 16
9.4 Stem Packing . . . 16
9.5 Packaging. . . . 16

Annex A (informative) **Information to be specified by the Purchaser**. . . . 17

Annex B (informative) **Identification of Valve Terms** . . . 19

Copyright American Petroleum Institute
Provided by IHS under license with API
No reproduction or networking permitted without license from IHS
Not for Resale

Contents

Page

Figures

1 Identification of Terms 4
2 Types of Valve Gates 8
3 Wear Travel of a Wedge Gate 9
B-1 Valve Nomenclature 19

Tables

1 Minimum Thickness of Shell Wall and Minimum Diameter of Stem, t_m 5
2 Minimum Wear Travel 9
3 Stuffing Box and Packing Dimensions 12
4 Materials for Parts 14

Copyright American Petroleum Institute
Provided by IHS under license with API
No reproduction or networking permitted without license from IHS
Not for Resale

Corrosion-resistant, Bolted Bonnet Gate Valves— Flanged and Butt-welding Ends

1 Scope

1.1 This standard specifies the requirements for corrosion-resistant bolted bonnet gate valves meeting the requirements of Standard Class, ASME B16.34 and having full port openings for use in process piping applications. This standard sets forth the requirements for the following gate valve features:

— bolted bonnet;

— outside screw and yoke;

— rising stems;

— non-rising handwheels;

— single or double gate;

— wedge or parallel sealing;

— metallic seating surfaces;

— flanged or butt-welding ends.

Corresponding to nominal pipe size DN:

— 15; 20; 25; 32; 40; 50; 65; 80; 100; 150; 200; 250; 300; 350; 400; 450; 500; 600.

It covers valves of the nominal pipe size NPS:

— $^{1}/_{2}$; $^{3}/_{4}$; 1; $1^{1}/_{4}$; $1^{1}/_{2}$; 2; $2^{1}/_{2}$; 3; 4; 6; 8; 10; 12; 14; 16; 18; 20; 24.

Applies to pressure class designations:

— 150; 300; 600.

1.2 Annex B illustrates a bolted bonnet gate valve for the purpose of establishing standard nomenclature for valve parts.

1.3 The dimensions in metric (SI) units are standard; customary units are shown for reference.

2 Normative References

The following referenced documents are indispensable for the application of this document. For dated references, only the edition cited applies. For undated references, the latest edition of the referenced document (including any amendments) applies.

API Standard 598, *Valve Inspection and Testing*

API Standard 600, *Steel Gate Valves—Flanged and Butt-welding Ends, Bolted Bonnets*

Copyright American Petroleum Institute
Provided by IHS under license with API
No reproduction or networking permitted without license from IHS
Not for Resale

API Standard 602, *Steel Gate, Globe and Check Valves for Sizes NPS 4 (DN 100) and Smaller for the Petroleum and Natural Gas Industries*

ASME II [1], *Part D, Properties Materials*

ASME IX, *Qualification Standard for Welding and Brazing Procedures, Welders, Brazers, and Welding and Brazing Operators*

ASME B1.1, *Unified Inch Screw Threads (UN and UNR Thread Form)*

ASME B1.5, *Acme Screw Threads*

ASME B1.8, *Stub Acme Screw Threads*

ASME B1.12, *Screw Threads—Class 5 Interference-Fit Thread*

ASME B1.13M, *Metric Screw Threads: M Profile*

ASME B1.20.1, *Pipe Threads, General Purpose (Inch)*

ASME B16.5, *Pipe Flanges and Flanged Fittings NPS 1/2 through NPS 24 Metric/Inch*

ASME B16.10, *Face-to-Face and End-to-End Dimensions of Valves*

ASME B16.11, *Forged Fittings, Socket-Welding and Threaded*

ASME B16.25, *Butt-welding Ends*

ASME B16.34, *Valves-Flanged, Threaded, and Welding End*

ASME B18.2.2, *Nuts for General Applications: Machine Screw Nuts, Hex, Square, Hex Flange, and Coupling Nuts (Inch Series)*

ASME B18.2.3.5M, *Metric Hex Bolts*

ASME B18.2.3.6M, *Metric Heavy Hex Bolts*

ASME B18.2.4.6M, *Metric Heavy Hex Nuts*

ASME B31.3, *Process Piping*

ASME B31T, *Standard Toughness Requirements for Piping*

ASTM A193 [2], *Standard Specification for Alloy-Steel and Stainless Steel Bolting for High-Temperature or High Pressure Service and Other Special Purpose Applications*

ASTM A194, *Standard Specification for Carbon and Alloy Steel Nuts for Bolts for High-Pressure or High-Temperature Service, or Both*

ASTM A307, *Standard Specification for Carbon Steel Bolts and Studs, 60,000 PSI Tensile Strength*

ASTM A320, *Standard Specification for Alloy-Steel and Stainless Steel Bolting for Low-Temperature Service*

---

1 ASME International, 3 Park Avenue, New York, New York 10016, www.asme.org.
2 ASTM International, 100 Bar Harbor Drive, West Conshohocken, Pennsylvania 19428, www.astm.org.

Copyright American Petroleum Institute
Provided by IHS under license with API
No reproduction or networking permitted without license from IHS
Not for Resale

ASTM A439, *Standard Specification for Austenitic Ductile Iron Castings*

AWS A 5.13 [3], *Specification for Solid Surfacing Welding Rods and Electrodes for Shielded Metal Arc Welding*

AWS A 5.21, *Specification for Bare Electrodes and Rods for Surfacing*

ISO 5210 [4], *Industrial valves. Multi-turn valve actuator attachments*

MSS SP-45 [5], *Bypass and Drain Connections*

MSS SP-55, *Visual Method for the Evaluation of Surface Irregularities*

MSS SP-91, *Guidelines for Manual Operation of Valves*

MSS SP-102, *Multi-Turn Valve Actuator Attachment—Flange and Driving Component Dimensions and Performance Characteristics.*

3 Terms and Definitions

For the purposes of this document, the following definitions apply.

3.1
class
An alphanumeric designation that is used for reference purposes relating to valve pressure/temperature capability, taking into account valve material mechanical properties and valve dimensional characteristics. It comprises “Class” followed by a dimensionless whole number. The number following “Class” does not represent a measurable value and is not used for calculation purposes except where specified in this standard. The allowable pressure for a valve having a class number depends on the valve material and its application temperature and is to be found in tables of pressure/temperature ratings.

3.2
DN
An alpha numeric designation of size that is common for components used in a piping system, used for reference purposes, comprising the letters “DN” followed by a dimensionless number indirectly related to the physical size of the bore or outside diameter of the end connection as appropriate. The dimensionless number following “DN” does not represent a measurable value and is not used for calculation purposes except where specified.

3.3
NPS
An alpha numeric designation of size that is common for components used in a piping system, used for reference purposes, comprising the letters “NPS” followed by a dimensionless number indirectly related to the physical size of the bore or outside diameter of the end connection as appropriate. The dimensionless number may be used as a valve size identifier without the prefix “NPS.” The dimensionless size identification number does not represent a measurable value and is not used for calculation purposes.

3.4
shell
Comprised of the body, bonnet, and body-bonnet bolting which constitute the pressure boundary of an API 603 valve.

---

[3] American Welding Society, 550 N.W. LeJeune Road, Miami, Florida 33126, www.aws.org.
[4] International Organization for Standardization, 1, ch. de la Voie-Creuse, Case postale 56, CH-1211, Geneva 20, Switzerland, www.iso.org.
[5] Manufacturers Standardization Society of the Valve and Fittings Industry, Inc., 127 Park Street, NE, Vienna, Virginia 22180-4602, www.mss-hq.com.

Copyright American Petroleum Institute
Provided by IHS under license with API
No reproduction or networking permitted without license from IHS
Not for Resale

4 Pressure/Temperature Ratings

4.1 Pressure/temperature ratings shall be in accordance with those specified in the tables of ASME B16.34 for Standard Class for the applicable material specification and the applicable class.

4.2 Restrictions of temperature and concurrent pressure, or pressure and concurrent temperature (e.g. those imposed by special soft seals or special trim materials), shall be marked on the valve identification plate (see Section 8).

4.3 The temperature for a corresponding pressure rating is the maximum temperature of the pressure-containing shell of the valve. In general, this temperature is the same as that of the contained fluid. The use of a pressure rating corresponding to a temperature other than that of the contained fluid is the responsibility of the user.

4.4 For temperatures below the lowest temperature listed in the ASME B16.34 pressure/temperature tables, the service pressure shall be no greater than the pressure for the lowest listed temperature. The use of valves at lower temperatures is the responsibility of the user.

NOTE Consideration should be given to the loss of ductility and impact strength of many materials at low temperature, ASME B31.3 Appendix A and ASME B31T may be used as guidance.

4.5 Double seated valves, in some design configurations, may be capable of trapping liquid in the center cavity of the valve when in the closed position. If subjected to an increase in temperature, an excessive build-up of pressure can occur, which may result in a pressure boundary failure. Where such a condition is possible, it is the responsibility of the user to provide or require to be provided adequate means (by design, installation, or operating procedures) for pressure relief of the center cavity.

5 Design

5.1 General

5.1.1 A valve body schematic is shown as Figure 1. The minimum body wall thickness, t_m, at the time of manufacture shall be as given in Table 1, except as indicated in 5.1.2 for butt-welding valve ends. Additional metal thickness needed for assembly stresses, stress concentrations, and shapes other than circular shall be determined by individual manufacturers.

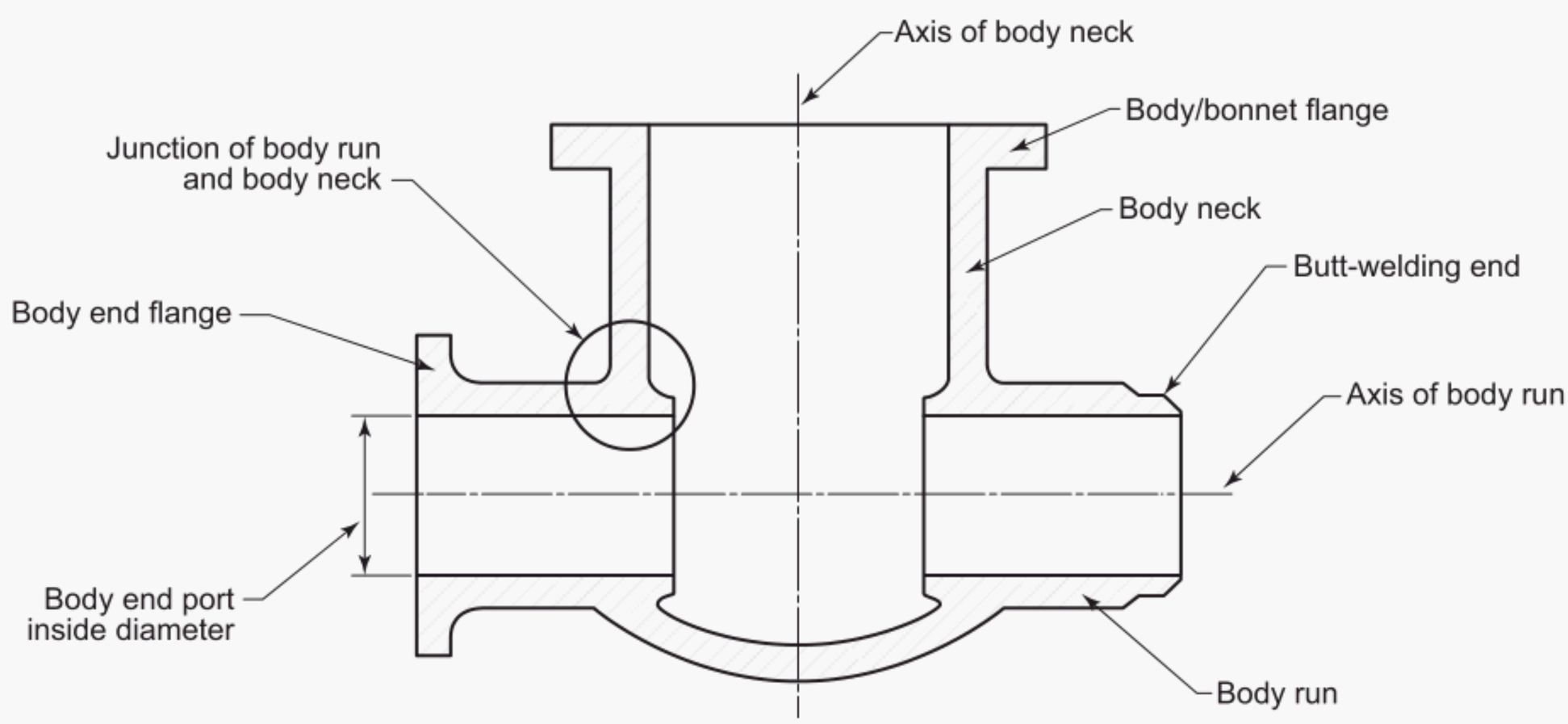

Figure 1—Identification of Terms

Copyright American Petroleum Institute
Provided by IHS under license with API
No reproduction or networking permitted without license from IHS
Not for Resale

Table 1—Minimum Thickness of Shell Wall and Minimum Diameter of Stem, t_m

Nominal Size DN	Class 150		Class 300		Class 600		Nominal Size NPS
	Shell Wall Thickness mm (in.)	Stem Diameter mm (in.)	Shell Wall Thickness mm (in.)	Stem Diameter mm (in.)	Shell Wall Thickness mm (in.)	Stem Diameter mm (in.)	
15	3.2 (0.12)	10.7 (0.42)	3.3 (0.13)	12.3 (0.48)	3.6 (0.14)	12.3 (0.48)	1/2
20	3.6 (0.14)	10.7 (0.42)	3.8 (0.15)	12.3 (0.48)	4.2 (0.16)	12.3 (0.48)	3/4
25	4.0 (0.16)	12.3 (0.48)	4.3 (0.17)	15.5 (0.61)	4.8 (0.19)	15.5 (0.61)	1
32	4.4 (0.17)	12.3 (0.48)	4.8 (0.19)	15.5 (0.61)	5.1 (0.20)	15.5 (0.61)	1 1/4
40	4.8 (0.19)	13.9 (0.55)	5.2 (0.21)	18.7 (0.73)	5.5 (0.22)	18.7 (0.73)	1 1/2
50	5.5 (0.22)	15.5 (0.61)	6.1 (0.24)	18.7 (0.73)	6.2 (0.25)	18.7 (0.73)	2
65	5.8 (0.23)	15.5 (0.61)	6.5 (0.26)	18.7 (0.73)	7.1 (0.28)	21.8 (0.86)	2 1/2
80	6.0 (0.24)	18.7 (0.73)	6.9 (0.28)	21.8 (0.86)	7.9 (0.31)	25.0 (0.98)	3
100	6.4 (0.26)	21.8 (0.86)	7.8 (0.31)	25.0 (0.98)	9.6 (0.38)	28.2 (1.11)	4
150	7.2 (0.28)	25.0 (0.98)	9.4 (0.38)	31.3 (1.23)	13.1 (0.52)	37.6 (1.48)	6
200	8.0 (0.32)	28.2 (1.11)	11.1 (0.44)	34.4 (1.35)	16.3 (0.64)	40.7 (1.60)	8
250	8.8 (0.35)	31.3 (1.23)	12.8 (0.51)	37.6 (1.48)	19.5 (0.77)	46.9 (1.84)	10
300	9.7 (0.38)	34.4 (1.35)	14.5 (0.58)	40.7 (1.60)	22.9 (0.90)	50.1 (1.97)	12
350	10.2 (0.40)	40.7 (1.60)	15.5 (0.62)	43.8 (1.72)	24.9 (0.98)	56.4 (2.22)	14
400	11.0 (0.43)	43.8 (1.72)	17.2 (0.68)	46.9 (1.84)	28.1 (1.11)	59.5 (2.34)	16
450	11.8 (0.47)	46.9 (1.84)	18.6 (0.74)	50.1 (1.97)	31.1 (1.22)	62.7 (2.47)	18
500	12.7 (0.50)	50.1 (1.97)	20.3 (0.81)	53.3 (2.09)	34.1 (1.34)	69.1 (2.72)	20
600	14.3 (0.56)	56.4 (2.22)	23.7 (0.94)	62.7 (2.47)	40.5 (1.60)	75.4 (2.97)	24

NOTE 1 See 5.8.1 and 5.8.3.

NOTE 2 Wall thickness calculated from equation of ASME B16.34 Appendix VI, with minimum flow diameter (d) per Table A-1 of ASME B16.34 for applicable valve DN or NPS and pressure class.

5.1.2 The weld end preparation in butt-welding end valves (see 5.3.2) shall not reduce the body wall thickness to less than the values specified in 5.1.1 within a region closer than t_m to the outside surface of the body neck, measured along the run direction. The transition to the weld preparation shall be gradual and the section shall be essentially circular through the entire length of the transition. Sharp discontinuities or abrupt changes in section in areas that infringe into the transition shall be avoided, except that test collars or bands, either welded or integral, are allowed. In no case shall the thickness be less than 0.77 t_m at a distance of 2 t_m from the weld end.

5.2 Bonnet Wall Thickness

The minimum bonnet wall thickness at the time of manufacture, except for the neck extension that contains the packing, shall be t_m as given in Table 1. For the neck extension, the local minimum wall thickness shall be based on the local diameter, e.g. the inside diameter of the stem bore or packing box bore, and shall be in accordance with valve body neck rules of para. 6.1.3 of ASME B16.34.

Copyright American Petroleum Institute
Provided by IHS under license with API
No reproduction or networking permitted without license from IHS
Not for Resale

5.3 Body Dimensions

5.3.1 Flanged Ends

5.3.1.1 Body end flanges shall comply with the dimensional requirements of ASME B16.5. Unless otherwise specified, raised face end flanges shall be provided. The Purchaser may specify a flange facing finish other than that specified in ASME B16.5.

5.3.1.2 Face-to-face dimensions shall be in accordance with ASME B16.10. Body end flanges and bonnet flanges shall be cast or forged integral with the body.

5.3.2 Butt-welding Ends

5.3.2.1 Butt-welding ends for valve sizes greater than DN 50 (NPS 2) shall conform to the requirements of ASME B16.25 and B16.34 for the bore specified for use without backing rings. Butt-welding ends for valves DN 50 (NPS 2) and smaller shall conform to the requirements of API 602. Conversion of a flanged end valve to a butt-welding valve for Class 300 and above may be permitted by agreement between the Purchaser and manufacturer.

5.3.2.2 End-to-end dimensions for butt-welding end class designated valves shall be in accordance with ASME B16.10, unless otherwise specified by the Purchaser.

5.3.2.3 Short pattern butt-welding end bolted bonnet valves are not permitted.

5.3.3 Body Seats

5.3.3.1 The inside diameter of the seat opening shall not be less than that specified in Table A-1 of Appendix A of ASME B16.34 for the applicable valve DN or NPS and pressure class.

5.3.3.2 Body seats may be separate or integral with the body. When hard facing is furnished, it shall be applied as a weld overlay of AWS A5.13 ECoCr-A or AWS A 5.21 ERCoCr-A, except as provided in 6.2.2, and shall have a minimum finished thickness of 1.6 mm (0.06 in.).

5.3.3.3 Where separate seat rings are provided, they shall be shoulder or bottom seated, and either threaded or seal welded in place, except that for DN ≤ 50 (NPS ≤ 2) rolled or pressed in seat rings may be used. Threaded seat rings may also be seal welded and shall be provided with lugs or slots to facilitate removal. The material used for seal welding shall provide for the same corrosion resistance as the valve body material.

5.3.3.3.1 Welding on seat rings and valves including any associated PWHT shall be performed using qualified welders and established procedures in accordance with ASME Section IX and the principles of Part D of ASME Section II, Appendix A.

5.3.3.4 Body seat rings shall have adequate seating area surface and shall have edges equipped with a radius or chamfer as necessary, to prevent galling or any other damage to the gate when the valve is operated against pressure.

5.3.3.5 Sealing compounds or greases shall not be used when assembling seat rings; however, a light lubricant having a viscosity no greater than kerosene may be used to prevent galling of mating threaded surfaces.

5.4 Bonnet Dimensions

5.4.1 When designing the stem, gland, lantern or spacer ring (if supplied) and backseat the manufacturer shall consider stem guiding and the prevention of packing extrusion.

Copyright American Petroleum Institute
Provided by IHS under license with API
No reproduction or networking permitted without license from IHS
Not for Resale

5.4.2 A machined conical or spherical backseat shall be provided in the bonnet to contact a corresponding seating surface on the valve stem. The backseat shall be either an integral surface or weld-deposited hard facing with a minimum finished thickness of 1.6 mm (0.06 in.). Weld deposited hard facing is permissible as noted in 5.3.3.2 and as agreed upon by Purchaser.

5.4.3 Bonnets shall be one-piece castings or forgings.The gland bolting shall not be anchored to the bonnet or yoke through a fillet welded attachment or stud welded pins. The anchor design shall not include slotted holes or brackets which do not retain gland bolting during repacking.

5.4.4 Tapped test openings shall be provided only if specified in the purchase order.

5.5 Bonnet-to-body Joint

5.5.1 The bonnet-to-body joint shall be a flange and gasket type and the gasket shall not extend beyond the inner edge of the bolt holes.

5.5.2 For Class 150 valves, the bonnet-to-body joint shall be one of the following types illustrated in Figure 7 of ASME B16.5.

— flat face;

— raised face;

— tongue and groove;

— spigot and recess (i.e. male and female);

— ring joint.

5.5.3 For valves having pressure class designation Class > 150, the bonnet-to-body joint shall be as in 5.5.2, except that the flat face joint is not permitted.

5.5.4 The bonnet flange gasket shall be suitable for a fluid temperature range –29 °C (–20 °F) to 538 °C (1000 °F) and be one of the following:

— solid metal, corrugated or grooved (profiled) metal gasket with suitable facing;

— metal ring joint;

— spiral wound metal gasket with filler and a centering/compression ring;

— spiral wound metal gasket with filler, to be used only in a body-to-bonnet joint design that provides gasket compression control.

For Class 150, the following are also acceptable:

— corrugated metal insert with graphite facings;

— when approved by the Purchaser, flexible graphite sheet, reinforced with a stainless steel flat, perforated, tanged, or corrugated insert equipped with annular containment rings;

— when approved by the Purchaser, other suitable facings may be used.

5.5.5 Except for Class 150 and all valve classes in sizes DN 65 (NPS 2.5) and smaller, bonnet-to-body flange gasket shall be circular.

Copyright American Petroleum Institute
Provided by IHS under license with API
No reproduction or networking permitted without license from IHS
Not for Resale

5.5.6 Bonnet and body flange nut bearing surfaces shall be parallel to the flange face within ±1°. Spot facing or back-facing required to meet the parallelism requirement shall be in accordance with ASME B16.5.

5.5.7 The bonnet-to-body joint shall be secured by a minimum of four bolts/cap screws that provide uniform spacing and load distribution. For valves DN 25 (NPS 1) and larger, through-bolts shall be used in the bonnet joint. For valves DN 20 (NPS $^3/_4$) and smaller, through-bolts, headed bolts, or cap screws may be used. Cap screws, if used, shall be suitable for external wrenching only. The minimum stud bolt size for each valve size shall be as follows:

— M10 or $^3/_8$ when DN ≤ 65 (NPS ≤ $2^1/_2$)

— M12 or $^1/_2$ when 80 ≤ DN ≤ 200 (3 ≤ NPS ≤ 8);

— M16 or $^5/_8$ when DN ≥ 250 (NPS ≥ 10)

5.5.8 The total cross-sectional area of the bolts in valve bonnet bolting shall be in accordance with the requirements of ASME B16.34, Paragraph 6.4.

5.5.9 At assembly, gasket contact surfaces shall be free of sealing compounds. A light coating of a lubricant, no heavier than kerosene, may be applied if needed to assist in proper gasket assembly.

5.6 Gate

5.6.1 Gate configurations are categorized as illustrated in Figure 2.

5.6.1.1 A one-piece wedge gate—as either a solid or flexible wedge design—shall be furnished, unless otherwise specified by the Purchaser.

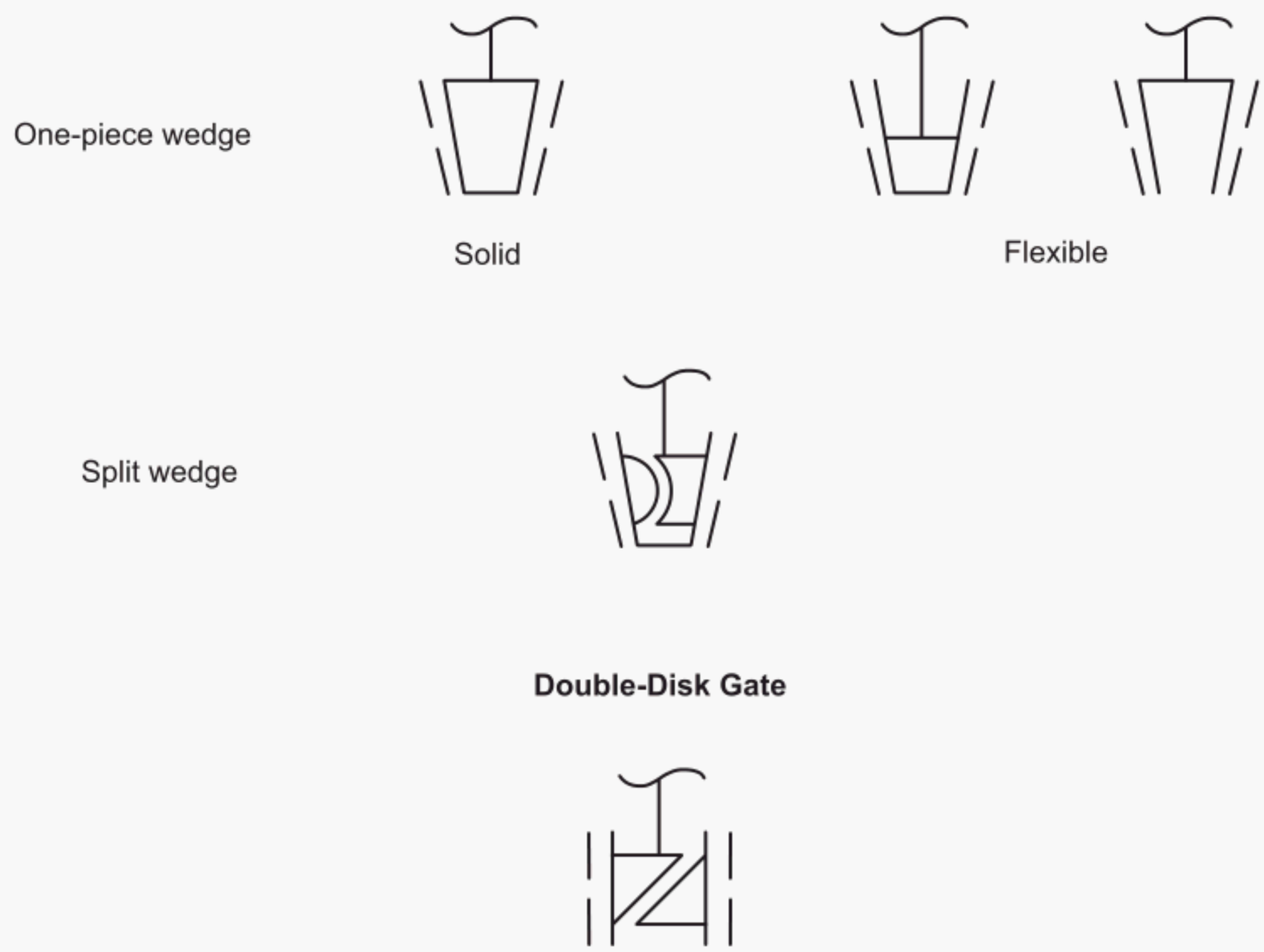

Figure 2—Types of Valve Gates

Copyright American Petroleum Institute
Provided by IHS under license with API
No reproduction or networking permitted without license from IHS
Not for Resale

5.6.1.2 A two-piece split wedge gate or parallel seat double-disc gate may be furnished when specified by the Purchaser. A split wedge gate consists of two independent seating parts that conform to the body seats when closed. The split wedge shall be designed so that the pieces cannot become separated, regardless of the gate position or valve orientation. A double-disc gate shall have a spreading mechanism (i.e. a wedging device or spring) that forces the two parallel discs to the body seats when closed.

5.6.2 Except for a double-disc gate, in the open position, the gate shall completely clear the valve seat openings.

5.6.3 Gate seating surfaces shall be integral or faced with weld metal. Unless specified, hardfaced seating surfaces are not required. Finished thickness of any facing material shall be not less than 1.6 mm (0.06 in.)

5.6.4 Wedge gates shall be designed to account for seat wear. The dimensions that fix the position of the gate seats relative to the body seats shall be such that the gate, starting from the time of manufacture, can, as a result of seat wear, move into the seats by a distance, h, defined as wear travel. Wear travel is in a direction that is parallel with the valve stem. The required minimum wear travel varies with valve size in accordance with Table 2.

Table 2—Minimum Wear Travel

Valve Size Range DN (NPS)	**Wear Travel** h mm (in.)
15 ≤ DN ≤ 50 (1/2 ≤ NPS ≤ 2)	2.3 (0.09)
65 ≤ DN ≤ 150 (2 1/2 ≤ NPS ≤ 6)	3.3 (0.13)
200 ≤ DN ≤ 300 (8 ≤ NPS ≤ 12)	6.4 (0.25)
350 ≤ DN ≤ 450 (14 ≤ NPS ≤ 18)	9.7 (0.38)
500 ≤ DN ≤ 600 (20 ≤ NPS ≤ 24)	12.7 (0.50)

5.6.5 The body and gate shall have guide surfaces to minimize wear of the gate seats during operation of the valve (see Figure 3), to accurately position the gate throughout the travel distance to its seat, and to ensure alignment of the gate and stem in all orientations without gate binding or galling. The possible loss of metal due to corrosion, erosion, abrasive wear, or a combination of these factors shall be considered in the design of the body and gate guide surfaces. Wedge guides and/or body guides need not be hardfaced unless specified in the purchase order, or when required to allow for proper valve operation in any orientation, including affects of wear or galling.

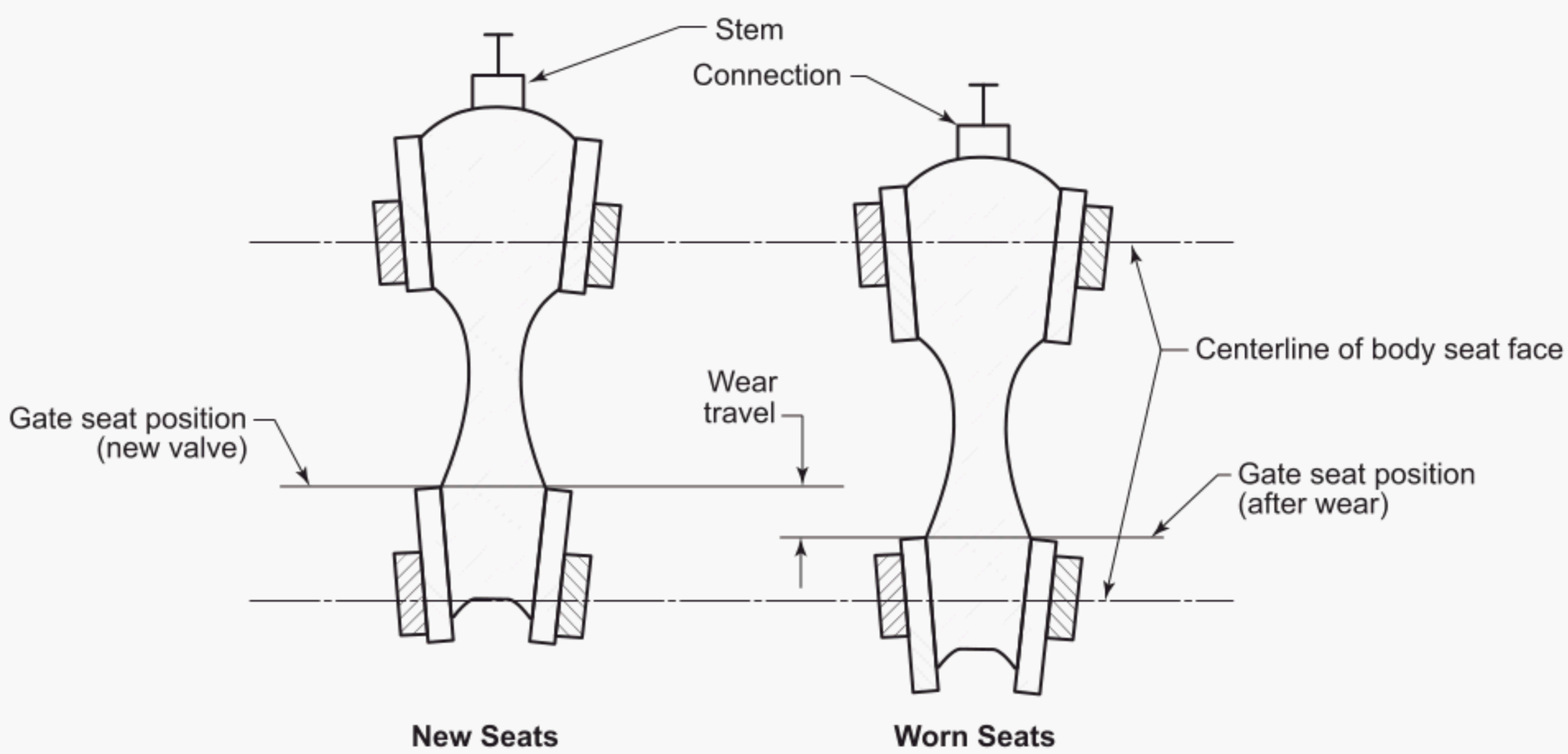

Figure 3—Wear Travel of a Wedge Gate

Copyright American Petroleum Institute
Provided by IHS under license with API
No reproduction or networking permitted without license from IHS
Not for Resale

5.7 Yoke

5.7.1 The yoke may be either an integral part of the bonnet or a separate part.

5.7.2 Yokes that are separate shall have yoke-to-bonnet mating surfaces machined so as to assure a proper bearing assembly interface. Separate yokes shall be bolted to the bonnet with through bolts.

5.7.3 The yoke-to-stem nut bearing surfaces shall be machined flat and parallel. A lubricating fitting shall be provided for the bearing surfaces.

5.8 Stem and Stem Nut

5.8.1 The minimum stem diameter measured at the section that passes through the packing, shall be in accordance with Table 1. The actual stem diameter shall take into account the valve design details and the stem materials strength characteristics. The stem surface area in contact with the packing shall have a surface finish, Ra, of 0.80 µm (32 µin.) or smoother.

NOTE The stem strength should be considered when calculating the maximum input force from the handwheel and gearbox (if equipped) in accordance with MSS SP-91 or in accordance with maximum rim pull when specified by the Purchaser.

5.8.2 Stems shall have a gate attachment means at one end and an external trapezoidal style thread form at the other. Stem nuts shall be used for handwheel attachment and to drive the operating stem thread.

5.8.3 The stem-to-stem nut threads shall be of trapezoidal form as specified in ASME B1.5 or ASME B1.8, (minor modifications are permitted for either thread) with nominal dimensional variations allowed. The thread major diameter may be less by a maximum of 1.6 mm (0.06 in.) than the diameter of the stem that passes through the packing. Stem threads shall be left-handed so that a direct operated handwheel rotated in a clockwise direction closes the valve.

5.8.4 The stem shall be one-piece wrought material. A stem that is a welded fabrication or threaded assembly shall not be provided.

5.8.5 Out of straightness of the entire length of the stem shall not exceed 0.001 mm/mm (0.001 in./in.)

5.8.6 The stem end that connects to a gate shall be in the form of a “T,” except that for a double-disc gate, the end connection may be threaded.

5.8.7 The stem connection shall be designed to prevent the stem from turning or from becoming disengaged from the gate while the valve is in service.

5.8.8 The stem design shall be such that the strength of the stem to gate connection and the part of the stem within the valve pressure boundary shall, under axial load, exceed the strength of the stem at the root of the operating thread.

5.8.9 The one-piece stem shall include a conical or spherical raised surface that seats against the bonnet backseat when the gate is at its full open position.

NOTE The existence of a stem-bonnet backseat, is not meant to imply a manufacturer’s recommendation of its use for the purpose of adding or replacing packing while the valve is under pressure.

Copyright American Petroleum Institute
Provided by IHS under license with API
No reproduction or networking permitted without license from IHS
Not for Resale

5.8.10 The yoke shall retain the stem nut which links the handwheel to the stem. For valves larger than DN 150 (NPS 6) Class 150, DN 100 (NPS 4) Class 300 or DN 50 (NPS 2) Class 600, the stem nut arrangement shall be designed to:

a) Permit the removal of the handwheel, without allowing the stem and gate to drop into the closed position, if the handwheel is removed when the valve is in the open position.

b) Allow the stem nut to be replaced, with the stem secured, without affecting the pressure retaining capability of the bonnet assembly. However, replacement under pressure is not recommended.

5.8.11 The stem-nut-to-handwheel attachment shall be through a hexagonal interface, a round interface having a keyway or another means of equivalent strength. Valves shall have a stem operated by a rotating stem nut mounted at the top of the yoke. The stem nut shall have a hexagonal shank, a round shank with a keyway, or another drive of equivalent strength and durability for attachment to the handwheel.

5.8.12 When the stem nut is retained in the yoke by means of a threaded bushing, the bushing shall be secured in place using either a lock weld or a positive mechanical lock. Locking by simple metal upsetting such as peening or staking is not permitted.

5.8.13 The closed-position stem thread projection beyond the stem nut on a new handwheel operated valve shall be a distance having a minimum equal to the valve wear travel and a maximum of five times the wear travel for valves DN ≤ 150 (NPS ≤ 6), and three times the wear travel for valves DN > 150 (NPS > 6).

5.8.14 Valves DN ≥ 150 (NPS ≥ 6) with pressure class ≥ 600, shall be furnished with stem nuts having ball or roller bearings.

5.9 Packing and Packing Box

5.9.1 The packing may be either square or rectangular or trapezoidal in cross-section. The nominal radial width of the packing shall be in accordance with Table 3.

5.9.2 The nominal depth of the packing box shall accommodate a minimum of five uncompressed rings of packing. Unless otherwise specified by the Purchaser, the packing box surface area in contact with the packing material shall have a surface finish, Ra, of 4.5 µm (175 µin.) or smoother. The stuffing box dimensions shall meet those specified in Table 3. The remaining adjustment length of the packing gland, with the gland tight and after final hydrostatic testing, shall be greater than one and one-half times the packing width specified in Table 3.

5.9.3 A gland and a separate gland flange shall be provided for packing compression. The gland flange shall have two holes to receive the gland bolting. Slots for gland flange bolts shall not be used. The gland and gland flange shall be self-aligning. The gland shall have a shoulder at its outer edge so as to prevent complete entry of the gland into the packing box.

5.9.4 A lantern ring shall be furnished only if specified in the purchase order. In order to accommodate the lantern ring, the stuffing box depth shall be at least equivalent to that of a minimum of three uncompressed rings of packing above the lantern ring and three uncompressed rings of packing below the lantern ring, plus the length of the lantern ring.

5.9.5 The clearance between the packing box bore (inside diameter) and the outside diameter of the gland (see Figure B.1) shall be nominally less than the diametrical clearance between the inside diameter of the gland and the stem diameter.

Copyright American Petroleum Institute
Provided by IHS under license with API
No reproduction or networking permitted without license from IHS
Not for Resale

Table 3—Stuffing Box and Packing Dimensions

Stuffing Box Dimensions							
Nominal Stem Outside Diameter		Nominal Packing Width		Nominal Bore		Minimum Depth	
mm	in.	mm	in.	mm	in.	mm	in.
10.7	0.42	4.0	0.16	19.0	0.75	19.8	0.78
12.7	0.50	4.8	0.19	22.2	0.87	23.8	0.94
14.3	0.56	4.8	0.19	23.8	0.94	23.8	0.94
15.9	0.63	6.4	0.25	28.6	1.25	31.7	1.25
17.5	0.69	6.4	0.25	30.2	1.18	31.7	1.25
19.1	0.75	6.4	0.25	31.8	1.25	31.7	1.25
22.2	0.87	6.4	0.25	35.0	1.38	31.7	1.25
25.4	1.00	6.4	0.25	38.1	1.5	31.7	1.25
28.6	1.12	7.9	0.31	44.4	1.75	39.6	1.56
31.8	1.25	7.9	0.31	47.6	1.88	39.6	1.56
34.9	1.38	7.9	0.31	50.8	2.0	39.6	1.56
38.1	1.50	9.5	0.38	57.2	2.25	47.6	1.88
41.3	1.63	9.5	0.38	60.3	2.38	47.6	1.88
44.5	1.75	9.5	0.38	64.3	2.5	47.6	1.88
47.6	1.88	9.5	0.38	66.7	2.63	47.6	1.88
50.8	2.0	11.1	0.48	73.0	2.88	55.6	2.18
57.2	2.25	12.7	0.50	82.6	3.25	63.5	2.5
60.3	2.38	12.7	0.50	85.7	3.38	63.5	2.5
63.5	2.5	12.7	0.50	89.7	3.5	63.5	2.5
76.2	3.0	14.3	0.56	105.6	4.25	71.4	2.81
For stem diameters not listed, the packing width and stuffing box bore shall be determined by linear interpolation from those shown.							

5.10 Bolting

5.10.1 Bolting shall be standard inch series bolting, except if the Purchaser specifies metric series bolting. Bolting for the bonnet-to-body joint shall be continuously threaded stud bolts with heavy, semi-finished hexagon nuts that are in accordance with ASME B18.2.2 or ASME B18.2.4.6M. Headed bolts (ASME B18.2.3.5M, ASME B18.2.3.6M) are permitted, but shall be limited to class 150 in sizes DN 200 (NPS 8) and smaller and class 300 in sizes DN 150 (NPS 6) and smaller. Cap screws may be utilized for bonnet bolting for valves DN 20 (NPS $^{3}/_{4}$) and smaller.

5.10.2 Yoke-to-bonnet bolting shall be either continuously threaded stud bolts or headed bolts with hexagon nuts.

5.10.3 Gland bolts shall be hinged eyebolts, headed bolts, stud bolts or studs. Hexagon nuts shall be used.

5.10.4 Bolting with diameters M24 (1 in.) and smaller shall have coarse (UNC) threads or the most nearly corresponding metric threads. Bolting with diameters larger than M24 (1 in.) shall be 8-thread series (8UN) or the most nearly corresponding metric threads. Bolt threads shall be Class 2A and nut threads shall be Class 2B, in

Copyright American Petroleum Institute
Provided by IHS under license with API
No reproduction or networking permitted without license from IHS
Not for Resale

accordance with ASME B1.1. Studs used for gland bolting shall use a Class 5 interference fit conforming to ASME B1.12. When metric bolting is used metric bolt threads shall be tolerance Class 6g and nuts tolerance Class 6H in accordance with ASME B1.13M.

5.11 Operation

5.11.1 Unless otherwise specified by the Purchaser, the valve shall be supplied with a direct operated handwheel that opens the valve when turned in a counter-clockwise direction.

5.11.2 The handwheel shall be a spoke-rim type with a maximum of six spokes and shall be free from burrs and sharp edges. Unless otherwise specified, the handwheel shall be a one-piece casting or forging or a multi-piece carbon steel fabrication that includes other carbon steel product forms. Fabricated handwheels shall have strength and toughness characteristics comparable to that of handwheels made as one-piece castings or forgings.

5.11.3 The handwheel shall be marked with the word “OPEN” and an arrow pointing in the direction of opening, except when the handwheel size makes such marking impractical.

5.11.4 The handwheel shall be retained on the stem nut by a threaded handwheel nut.

5.11.5 If operation by a gearbox or power actuator is to be added to the valve, the Purchaser shall specify the following, as applicable:

— spur or bevel gear and the position of gearing handwheel relative to the pipe axis;

— electric, hydraulic, pneumatic or other actuator type;

— maximum service temperature and pressure differential across the valve disc;

— maximum rim pull;

— power supply attributes for power actuators (including maximum differential pressure).

5.11.6 Valve-to-gear-box or power actuator flange mating dimensions shall be according to ISO 5210 or MSS-SP-102 or shall comply with the Purchaser’s specifications.

5.12 Bypasses and Other Auxiliary Connections

5.12.1 Auxiliary Connections

Auxiliary connections and tapped test openings to the body and/or bonnet, such as drains shall be furnished only if specified on the purchase order. The design and construction of the joint and the piping of auxiliary connections shall conform to the requirements of ASME B16.34 and MSS SP-45. When required for valve DN 50 (NPS 2) or larger, auxiliary connections shall be sized and located as specified in ASME B16.34. The size and location of auxiliary connections shall be indicated on the purchase order.

5.12.2 Bypasses

If a bypass is furnished, it shall be of the valve external type and of a size that is specified in ASME B16.34 and MSS SP-45. The bypass valve shall conform to API 602 and be of an outside-screw-yoke rising stem globe valve type, with a flanged or welded bonnet, and of a pressure class at least equal to that of the primary valve. The bypass shall be located on the side of the valve connecting either the A-B or the E-F locations as shown in MSS SP-45. The bypass valve stem shall have the same general orientation as the primary valve stem.

--`,,```,,,,```-`-`,,`,,`,`,,`---

Copyright American Petroleum Institute
Provided by IHS under license with API
No reproduction or networking permitted without license from IHS Not for Resale

6 Materials

6.1 Materials Other Than Trim Materials

Materials for body, bonnet, and valve parts other than trim items shall be selected from Table 4.

Table 4—Materials for Parts

Part	Material
Body and bonnet	As selected from ASME B16.34, Group 2 and Group 3.
Gate/disc	Equal in corrosion resistance to that of the body material.
Yoke, separate	Carbon steel, austenitic stainless steel or same nominal chemical composition as the shell.
Bolting: body to bonnet [a]	Unless otherwise specified, heavy hex bonnet bolting shall be ASTM A193 Grade B8 bolts with ASTM A194 Grade 8 nuts, ASTM A193 Grade B8C bolts with ASTM A194 Grade 8C nuts, or ASTM A193 Grade B8M bolts with ASTM A 194 Grade 8M nuts.
Bonnet gasket	The metallic portion exposed to the service environment shall be of a material that has a corrosion resistance at least equal to that of the body material. Filler metal of spiral wound gasket shall be flexible graphite unless otherwise specified.
Bolting: gland and yoke	Unless otherwise specified, gland bolts and nuts shall be made of 18Cr-8Ni steel or equal in corrosion resistance to that of the body material.
Seat ring	When separate body seat rings are used, they shall be of the same nominal chemical composition as the shell or stem. When a hard-facing material is used for the body seat, this material may be weld deposited directly on the valve body or on separate seat rings.
Gland flange	Steel, austenitic stainless steel or same nominal chemical composition as the shell.
Gland	Equal in corrosion resistance to that of the body material.
Packing	Unless otherwise specified, flexible graphite, for temperature range from –29 °C (–20 °F) to 538 °C (1000 °F). Graphite packing, when used, shall contain a corrosion inhibitor.
Lantern or spacer ring	Equal in corrosion resistance to that of the body or stem material.
Stem nut	13Cr steel, austenitic ductile iron (ASTM A439 Type D-2 or Type D-2C), austenitic stainless steel or copper alloy with melting point above 954 °C (1750 °F).
Handwheel	Unless other specified, malleable iron, carbon steel, or ductile iron.
Handwheel nut (retaining)	Carbon steel, malleable iron, ductile iron, 13Cr steel, austenitic stainless steel or non-ferrous copper alloy.
Plugs for tapped connections	Equal in corrosion resistance to that of the body material.
Bypass piping and valves	Equal in corrosion resistance to that of the body material.
Pin, double disk stem to gate	Equal in corrosion resistance to that of the stem material.
Identification plate	Austenitic stainless steel or nickel alloy. DN ≥150 (NPS ≥ 6): attached to the valve by corrosion-resistant fasteners or by welding. DN< 150 (NPS < 6): method of attachment shall be manufacturer's standard.

[a] Includes carbide solution treated and strain hardened grades.

Copyright American Petroleum Institute
Provided by IHS under license with API
No reproduction or networking permitted without license from IHS
Not for Resale

6.2 Trim

6.2.1 The trim is comprised of the following:

a) stem;

b) body seating surface;

c) gate seating surface;

d) small internal parts that normally contact the service fluid (i.e. stem connections, internal pins or screws, and spreading mechanism of a double-disc valve).

6.2.2 The standard valve trim parts shall be made of a material with the same nominal chemical composition as the valve body and bonnet. Alternate trims and overlays (including those referenced in API 602 Table 12 and AWS A5.13 ECoCr-E and AWS A5.21 ECoCr-E hardfacing) can be supplied by agreement between Purchaser and manufacturer.

7 Testing, Inspection, and Examination

7.1 Inspection and Examination

7.1.1 The valve manufacturer shall examine each valve to assure compliance to this standard.

7.1.2 If inspection by the Purchaser is specified in the purchase order, inspection shall be in accordance with API 598. Examination by the manufacturer shall be as specified in API 598.

7.1.3 Cast surfaces of pressure boundary parts shall be visually inspected in accordance with MSS SP-55.

7.2 Pressure Tests

Each valve shall be pressure tested as specified in API 598.

7.3 Repairs of Defects

Defects in the shell of a cast or forged, carbon or alloy steel valve that are revealed by inspection or testing may be repaired as permitted by the most nearly applicable ASTM cast or forged material specification listed in ASME B16.34.

7.4 Supplementary Requirements

Supplementary examination and testing (such as alloy verification [PMI], corrosion testing, NDE requirements, or other types) are required when specified in the purchase order.

8 Marking

8.1 General

Valves shall be marked in accordance with the requirements of ASME B16.34, except that the nameplate shall include the designation “API 603” in addition to the designation ASME B16.34. When special trim, or packing or gasket materials other than graphite are used, pressure / temperature limitations shall be noted on the nameplate per ASME B16.34.

Copyright American Petroleum Institute
Provided by IHS under license with API
No reproduction or networking permitted without license from IHS
Not for Resale

8.2 Marking for Unidirectional Valves

Valves with a center cavity relief shall have a flow arrow pointing downstream based on the center cavity relief to the high pressure side (inlet side) unless otherwise specified in the purchase order. The flow direction arrow shall be cast, forged, or stamped into the valve body outer wall; or with a separate identification plate permanently attached to the body.

9 Preparation for Shipment

9.1 Coatings

9.1.1 Except for the handwheel or non-corrosion resistant material parts, valve parts shall not be painted.

9.2 Openings

9.2.1 Valve end flanges and welding ends shall be blanked to protect the gasket surfaces or welding ends and the valve internals during shipment and storage. The protective covers shall be made of wood, wood fiber, plastic, or metal and shall be securely attached to the valve ends by bolts, steel straps, steel clips, or suitable friction-locking devices. Covers shall be designed so that the valve cannot be installed without removal of protective cover.

9.2.2 Tapped connections shall be fitted with fully tightened and threaded solid plugs.

9.3 Gate Position

The valve shall be shipped with the gate closed and with the stem threads lubricated.

9.4 Stem Packing

The valve shall be shipped with the lantern ring, if specified, and the packing installed (see 5.9.2). Unless specified otherwise by the Purchaser, the packing gland bolts shall be tightened for shipment.

9.5 Packaging

9.5.1 Unless export packaging is specified in the purchase order, valves may be shipped loose, palletized, or packed in a box or crate.

9.5.2 When export packaging is specified in the purchase order, valves shall be shipped individually or collectively in wooden boxes or crates in a manner that will prevent shifting within the package.

Copyright American Petroleum Institute
Provided by IHS under license with API
No reproduction or networking permitted without license from IHS
Not for Resale

Annex A
(informative)

Information to be specified by the Purchaser

NOTE Numbers in brackets are references to clauses or subsections of this standard.

1) Supplemental requirements of this standard shall be specifically stated in the purchase order.

2) If no supplemental requirements are to be taken, the purchase order just needs to refer to API 603 and to specify the items in the following list that are marked with an asterisk (*). The items listed below without an asterisk are options that may also be specified:

   a) valve size *; (see 1.1)

   b) pressure class *; (see 1.1)

   c) flanged ends, including flange facing finish; or welding ends, including bore *; (see 5.3.1.1 and 5.3.2.1)

   d) auxiliary connections and openings; (see 5.12.1)

   e) butt weld end-to-end dimension; (see 5.3.2.2)

   f) hardfaced seating surfaces; (see 5.6.4)

   g) stuffing box finish; (see 5.9.2)

   h) hardfaced backseat; (see 5.4.2)

   i) additional hard facing of body and/or wedge guides; (see 5.6.6)

   j) bonnet gasket; (see Table 4)

   k) tapped openings; (see 5.4.4)

   l) wedge gate or double-disc gate; also type of wedge, if required *; (see 5.6.1.1 and 5.6.1.2)

   m) lantern ring; (see 5.9.4)

   n) metric series bolting (see 5.10.1)

   o) gear operation, including type and arrangement, and the design maximum pressure differential across the valve; (see 5.11.5 and 5.11.6)

   p) power operation, including type of power and power unit, and the design maximum pressure differential across the valve; (see 5.11.5 and 5.11.6)

   q) bypass—specify either flanged or welded bonnet bypass valve; (see 5.12.2)

   r) material of the valve shell *; (see Table 4)

   s) nominal trim material *; (see 6.2.2)

--`,,```,,,,`-`-`,,`,,`,`,,`---

Copyright American Petroleum Institute
Provided by IHS under license with API
No reproduction or networking permitted without license from IHS

Not for Resale

t) handwheels; (see 5.11.1 and 5.11.2)

u) alternate stem packing material; (see Table 4)

v) bonnet bolting material; (see Table 4)

w) inspection by Purchaser; (see 7.1.2)

x) flow directional marking; (see 8.2)

y) supplementary examination and testing; (see 7.4)

z) export packaging. (see 9.5)

Copyright American Petroleum Institute
Provided by IHS under license with API
No reproduction or networking permitted without license from IHS
Not for Resale

Annex B
(informative)

Identification of Valve Terms

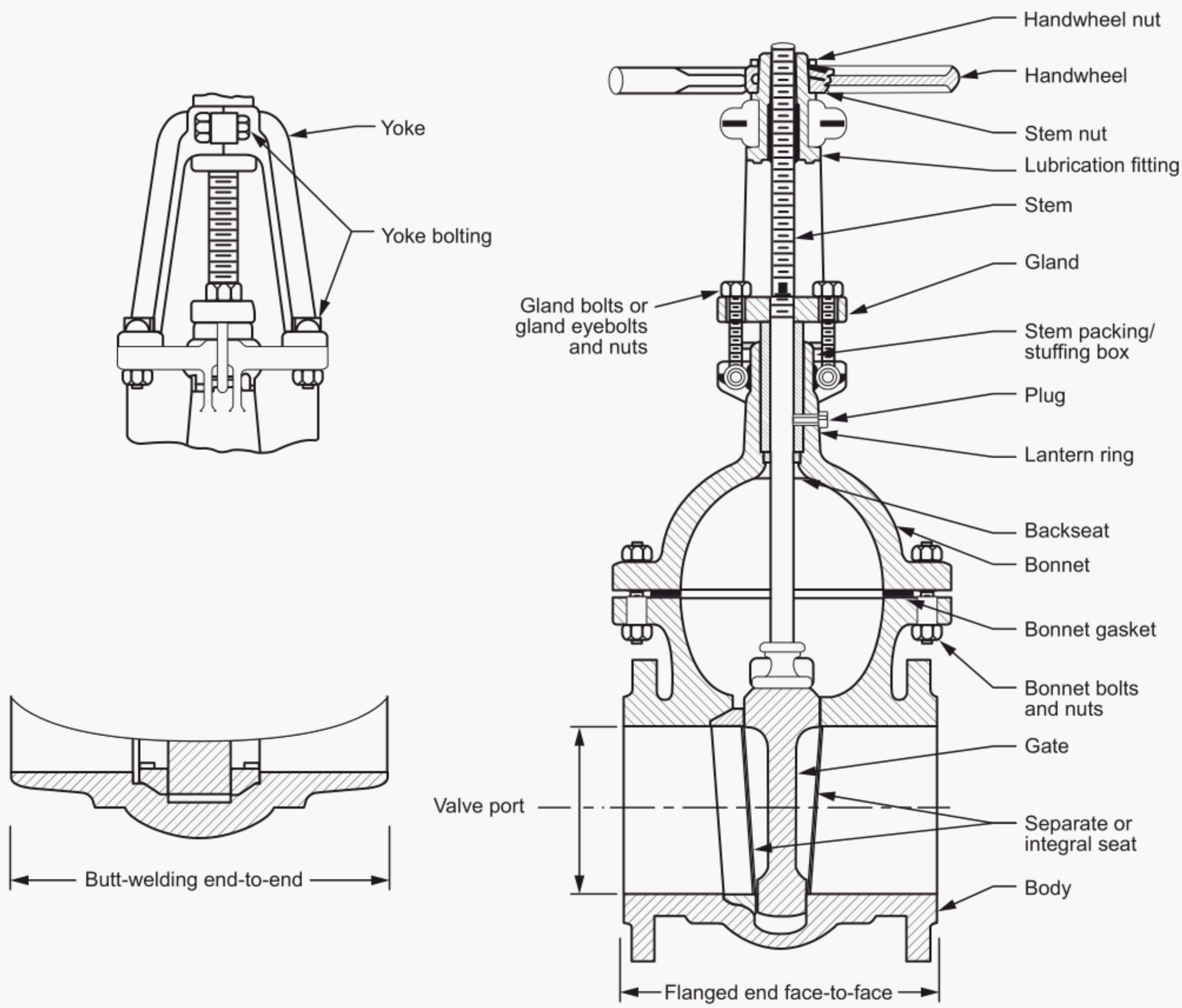

Figure B-1—Valve Nomenclature

Copyright American Petroleum Institute
Provided by IHS under license with API
No reproduction or networking permitted without license from IHS
Not for Resale

Copyright American Petroleum Institute
Provided by IHS under license with API
No reproduction or networking permitted without license from IHS
Not for Resale

THERE'S MORE WHERE THIS CAME FROM

REQUEST A QUOTATION
www.api.org/quote

API Monogram® Licensing Program
Sales: 877-562-5187
(Toll-free U.S. and Canada)
(+1) 202-682-8041
(Local and International)
Email: certification@api.org
Web: www.api.org/monogram

API Quality Registrar (APIQR®)
- ISO 9001
- ISO/TS 29001
- ISO 14001
- OHSAS 18001
- API Spec Q1®
- API Spec Q2®
- API Quality*Plus*®
- Dual Registration

Sales: 877-562-5187
(Toll-free U.S. and Canada)
(+1) 202-682-8041
(Local and International)
Email: certification@api.org
Web: www.api.org/apiqr

API Training Provider Certification Program (TPCP®)
Sales: 877-562-5187
(Toll-free U.S. and Canada)
(+1) 202-682-8041
(Local and International)
Email: tpcp@api.org
Web: www.api.org/tpcp

API Individual Certification Programs (ICP®)
Sales: 877-562-5187
(Toll-free U.S. and Canada)
(+1) 202-682-8041
(Local and International)
Email: icp@api.org
Web: www.api.org/icp

API Engine Oil Licensing and Certification System (EOLCS)
Sales: 877-562-5187
(Toll-free U.S. and Canada)
(+1) 202-682-8041
(Local and International)
Email: eolcs@api.org
Web: www.api.org/eolcs

Motor Oil Matters
Sales: 877-562-5187
(Toll-free U.S. and Canada)
(+1) 202-682-8041
(Local and International)
Email: motoroilmatters@api.org
Web: www.motoroilmatters.org

API Diesel Exhaust Fluid Certification Program
Sales: 877-562-5187
(Toll-free U.S. and Canada)
(+1) 202-682-8041
(Local and International)
Email: apidef@api.org
Web: www.apidef.org

API Perforator Design Registration Program
Sales: 877-562-5187
(Toll-free U.S. and Canada)
(+1) 202-682-8041
(Local and International)
Email: perfdesign@api.org
Web: www.api.org/perforators

API WorkSafe®
Sales: 877-562-5187
(Toll-free U.S. and Canada)
(+1) 202-682-8041
(Local and International)
Email: apiworksafe@api.org
Web: www.api.org/worksafe

API-U™
Sales: 877-562-5187
(Toll-free U.S. and Canada)
(+1) 202-682-8041
(Local and International)
Email: training@api.org
Web: www.api-u.org

API Data®
Sales: 877-562-5187
(Toll-free U.S. and Canada)
(+1) 202-682-8041
(Local and International)
Service: (+1) 202-682-8042
Email: data@api.org
Web: www.APIDataNow.org

API Publications
Phone: 1-800-854-7179
(Toll-free U.S. and Canada)
(+1) 303-397-7956
(Local and International)
Fax: (+1) 303-397-2740
Web: www.api.org/pubs
global.ihs.com

API Standards
Sales: 877-562-5187
(Toll-free U.S. and Canada)
(+1) 202-682-8041
(Local and International)
Email: standards@api.org
Web: www.api.org/standards

energy API
AMERICAN PETROLEUM INSTITUTE

Copyright American Petroleum Institute
Provided by IHS under license with API
No reproduction or networking permitted without license from IHS

Not for Resale

AMERICAN PETROLEUM INSTITUTE

1220 L Street, NW
Washington, DC 20005-4070
USA

202-682-8000

Additional copies are available online at www.api.org/pubs

Phone Orders:	1-800-854-7179	(Toll-free in the U.S. and Canada)
	303-397-7956	(Local and International)
Fax Orders:	303-397-2740	

Information about API publications, programs and services is available on the web at www.api.org.

Product No. C60308

--`,,```,,,,````-`-`,,`,,`,`,,`---

Copyright American Petroleum Institute
Provided by IHS under license with API
No reproduction or networking permitted without license from IHS

Not for Resale