Check Valves: Flanged, Lug, Wafer and Butt-welding

API STANDARD 594
SIXTH EDITION, SEPTEMBER 2004

American Petroleum Institute

Helping You Get The Job Done Right.SM

Copyright American Petroleum Institute
Reproduced by IHS under license with API
No reproduction or networking permitted without license from IHS

Not for Resale

Copyright American Petroleum Institute
Reproduced by IHS under license with API
No reproduction or networking permitted without license from IHS
Not for Resale

Check Valves: Flanged, Lug, Wafer and Butt-welding

Downstream Segment

API STANDARD 594
SIXTH EDITION, SEPTEMBER 2004

American Petroleum Institute

Helping You Get The Job Done Right.SM

Copyright American Petroleum Institute
Reproduced by IHS under license with API
No reproduction or networking permitted without license from IHS

Not for Resale

SPECIAL NOTES

API publications necessarily address problems of a general nature. With respect to particular circumstances, local, state, and federal laws and regulations should be reviewed.

API is not undertaking to meet the duties of employers, manufacturers, or suppliers to warn and properly train and equip their employees, and others exposed, concerning health and safety risks and precautions, nor undertaking their obligations under local, state, or federal laws.

Information concerning safety and health risks and proper precautions with respect to particular materials and conditions should be obtained from the employer, the manufacturer or supplier of that material, or the material safety data sheet.

Nothing contained in any API publication is to be construed as granting any right, by implication or otherwise, for the manufacture, sale, or use of any method, apparatus, or product covered by letters patent. Neither should anything contained in the publication be construed as insuring anyone against liability for infringement of letters patent.

Generally, API standards are reviewed and revised, reaffirmed, or withdrawn at least every five years. Sometimes a one-time extension of up to two years will be added to this review cycle. This publication will no longer be in effect five years after its publication date as an operative API standard or, where an extension has been granted, upon republication. Status of the publication can be ascertained from the API Standards department telephone (202) 682-8000. A catalog of API publications, programs and services is published annually and updated biannually by API, and available through Global Engineering Documents, 15 Inverness Way East, M/S C303B, Englewood, CO 80112-5776.

This document was produced under API standardization procedures that ensure appropriate notification and participation in the developmental process and is designated as an API standard. Questions concerning the interpretation of the content of this standard or comments and questions concerning the procedures under which this standard was developed should be directed in writing to the Director of the Standards department, American Petroleum Institute, 1220 L Street, N.W., Washington, D.C. 20005. Requests for permission to reproduce or translate all or any part of the material published herein should be addressed to the Director, Business Services.

API standards are published to facilitate the broad availability of proven, sound engineering and operating practices. These standards are not intended to obviate the need for applying sound engineering judgment regarding when and where these standards should be utilized. The formulation and publication of API standards is not intended in any way to inhibit anyone from using any other practices.

Any manufacturer marking equipment or materials in conformance with the marking requirements of an API standard is solely responsible for complying with all the applicable requirements of that standard. API does not represent, warrant, or guarantee that such products do in fact conform to the applicable API standard.

All rights reserved. No part of this work may be reproduced, stored in a retrieval system, or transmitted by any means, electronic, mechanical, photocopying, recording, or otherwise, without prior written permission from the publisher. Contact the Publisher, API Publishing Services, 1220 L Street, N.W., Washington, D.C. 20005.

Copyright © 2004 American Petroleum Institute

--`,,,,,,-`-`,,`,,`,`,,`---

Copyright American Petroleum Institute
Reproduced by IHS under license with API
No reproduction or networking permitted without license from IHS

Not for Resale

FOREWORD

This standard is a purchase specification for check valves of two basic types. Type 'A' check valves are short face-to-face with body types: wafer, lug and double flanged. Type 'B' check valves are long face-to-face with body types: flanged and butt-welding. Both Type 'A' and Type 'B' check valves are designed for installation between the various industry accepted classes of flanges or for butt-welding into the various industry accepted piping systems.

This standard requires the purchaser to specify certain details and features. Although it is recognized that the purchaser may desire to modify, delete, or amplify sections of this standard, it is strongly recommended that such modifications, deletions, and amplifications be made by supplementing this standard, rather than by rewriting or incorporating sections thereof into another complete standard.

API standards are published as an aid to procurement of standardized equipment and materials. These standards are not intended to inhibit purchasers or producers from purchasing or producing products made to specifications other than those of API.

API publications may be used by anyone desiring to do so. Every effort has been made by the Institute to assure the accuracy and reliability of the data contained in them; however, the Institute makes no representation, warranty, or guarantee in connection with this publication and hereby expressly disclaims any liability or responsibility for loss or damage resulting from its use or for the violation of any federal, state, or municipal regulation with which this publication may conflict.

Suggested revisions are invited and should be submitted to API, Standards department, 1220 L Street, NW, Washington, DC 20005.

--`,,,,,,,-`-`,,`,,`,`,,`---
Copyright American Petroleum Institute
Reproduced by IHS under license with API
No reproduction or networking permitted without license from IHS
Not for Resale

IMPORTANT INFORMATION CONCERNING USE OF ASBESTOS OR ALTERNATIVE MATERIALS

Asbestos is specified or referenced for certain components of the equipment described in some API standards. It has been of extreme usefulness in minimizing fire hazards associated with petroleum processing. It has also been a universal sealing material, compatible with most refining fluid services.

Certain serious adverse health effects are associated with asbestos, among them the serious and often fatal diseases of lung cancer, asbestosis, and mesothelioma (a cancer of the chest and abdominal linings). The degree of exposure to asbestos varies with the product and the work practices involved.

Consult the most recent edition of the Occupational Safety and Health Administration (OSHA), U.S. Department of Labor, Occupational Safety and Health Standard for Asbestos, Tremolite, Anthophyllite, and Actinolite, 29 *Code of Federal Regulations* Section 1910.1001; the U.S. Environmental Protection Agency, National Emission Standard for Asbestos, 40 *Code of Federal Regulations* Sections 61.140 through 61.156; and the U.S. Environmental Protection Agency (EPA) rule on labeling requirements and phased banning of asbestos products (Sections 763.160-179).

There are currently in use and under development a number of substitute materials to replace asbestos in certain applications. Manufacturers and users are encouraged to develop and use effective substitute materials that can meet the specifications for, and operating requirements of, the equipment to which they would apply.

SAFETY AND HEALTH INFORMATION WITH RESPECT TO PARTICULAR PRODUCTS OR MATERIALS CAN BE OBTAINED FROM THE EMPLOYER, THE MANUFACTURER OR SUPPLIER OF THAT PRODUCT OR MATERIAL, OR THE MATERIAL SAFETY DATA SHEET.

Copyright American Petroleum Institute
Reproduced by IHS under license with API
No reproduction or networking permitted without license from IHS
Not for Resale

CONTENTS

Page

NOTES TO PURCHASER vii

1 GENERAL 1
1.1 Scope 1
1.2 Sizes 1
1.3 Valve Nomenclature 1

2 NORMATIVE REFERENCES 1

3 PRESSURE-TEMPERATURE RATINGS 2
3.1 Valve Rating 2
3.2 Body Rating 2
3.3 Limited Rating 2

4 DESIGN 2
4.1 Body and Cover 2
4.2 Plates and Disc 6
4.3 Seating Surfaces 6
4.4 External Bolts and Threaded Holes 6
4.5 Flow Indication 6
4.6 Gasket Surface 6

5 MATERIAL 6
5.1 Body and Cover 6
5.2 Plate and Disc 6
5.3 Cover Gasket (Type 'B' Valves) 6
5.4 Trim 7
5.5 Internal Wetted Parts 7
5.6 Body Seat Rings 7
5.7 Springs 10
5.8 Pipe Plugs (Pin Retainers) 10
5.9 Nameplate 10

6 INSPECTION, EXAMINATION, TESTING, AND REPAIR 10
6.1 Inspection and Examination 10
6.2 Pressure Tests 10
6.3 Repair of Defects 10

7 MARKING 11
7.1 Nameplates 11
7.2 Limited Rating 11

8 SHIPMENT 11
8.1 Coatings 11
8.2 Valve Openings 11
8.3 Packaging 11

9 RECOMMENDED SPARE PARTS 11

Copyright American Petroleum Institute
Reproduced by IHS under license with API
No reproduction or networking permitted without license from IHS
Not for Resale

Page

Figures

1 Typical Type 'A' Single-plate Wafer Check Valve 3
2 Typical Type 'A' Dual-plate Wafer Check Valve 3
3 Typical Type 'A' Dual-plate Lug Check Valve 4
4 Typical Type 'A' Dual-plate Double-flanged Check Valve. 4
5 Typical Type 'B' Flanged Check Valve. 5
6 Limitations for Flange Face Interruptions That Fall within the Gasket Seating Area. 7

Tables

1A Minimum Body-wall Thickness by Class (in.). 8
1B Minimum Body-wall Thickness by Class (mm) 8
2A Type 'A' Valve Face-to-Face Dimensions by Class (in.) 9
2B Type 'A' Valve Face-to-Face Dimensions by Class (mm) 9
3 Seating-surface Nominal Trim Material 10

--`,,,,,,-`-`,,`,,`,`,,`---

Copyright American Petroleum Institute
Reproduced by IHS under license with API
No reproduction or networking permitted without license from IHS

Not for Resale

NOTES TO PURCHASER

1 If the purchaser needs a check valve that deviates from this standard, the deviating requirements shall be stated in the purchase order.

2 If no exceptions are to be taken to this standard, the purchase order need only make reference to API Std 594 and specify the items included in 2.1. Optional items included in 2.2 may also be specified.

2.1 Items Required on the Purchase Order:

a. Valve size (see 1.2).
b. Class (see 1.2).
c. Wafer, lug, double flange, flanged or butt-welding body type (see 4.1.3).
d. Flange standard for NPS 26 and larger (see 4.1.4).
e. Facings, plain, serrated, ring joint or butt-weld (see 4.1.5, 4.1.6 and 4.1.12).
f. Integral seating or removable seat ring (see 4.1.8).
g. Type 'A' single plate or dual plate (see 4.2).
h. Valve body material (see 5.1).
i. Materials of construction, including those for trim (see 5.4.2) and those for internal wetted parts (see 5.5).
j. Seating-surface material (see 5.4.2).
k. Maximum service temperature above 300°F for proper spring selection (see 5.7).

2.2 Optional Items:

a. Auxiliary connection (see 4.1.7).
b. Tapped test openings (see 4.1.9).
c. Lifting eyebolt (see 4.1.10).
d. Flange bolt holes tapped through (see 4.1.11, Figures 3 and 4).
e. Inspection (see 6.1).
f. Color and coatings (see 8.1).
g. Export packaging (see 8.3).
h. Recommended spare parts list along with general assembly drawing that identifies the parts (see Section 9).

3 Items where agreement with the manufacturer is required:

a. Gasket surface interruption (see 4.6).
b. Welded flanges (see 4.1.3).
c. Special materials (see 3.2.d).
d. Short pattern or special length (see 4.1.2).

4 Refer to API Std 598 for additional items that may need to be specified, including supplementary examination, the extent of inspection by the purchaser, the inspector's address, and the alternative low-pressure closure test.

Copyright American Petroleum Institute
Reproduced by IHS under license with API
No reproduction or networking permitted without license from IHS
Not for Resale

Copyright American Petroleum Institute
Reproduced by IHS under license with API
No reproduction or networking permitted without license from IHS
Not for Resale

Check Valves: Flanged, Lug, Wafer and Butt-welding

1 General

1.1 SCOPE

This standard covers design, material, face-to-face dimensions, pressure-temperature ratings, and examination, inspection, and test requirements for two types of check valves.

1.1.1 Type 'A' check valves are short face-to-face as defined in Tables 2A and 2B and can be: wafer, lug, or double flanged; single plate or dual plate; gray iron, ductile iron, steel, nickel alloy or other alloy designed for installation between Class 125 and 250 cast iron flanges as specified in ASME B16.1, between Class 150 and 300 ductile iron flanges as specified in ASME B16.42, between Class 150 – 2500 steel flanges as specified in ASME B16.5, and between Class 150 – 600 steel pipeline flanges as specified in MSS SP-44 or carbon steel flanges as specified in ASME B16.47.

1.1.2 Type 'B' check valves are long face-to-face as defined in 4.1.2 and can be: flanged or butt-welding; steel, nickel alloy or other alloy designed for installation between Class 150 – 2500 steel flanges as specified in ASME B16.5 or for butt-welding into industry accepted piping systems.

1.2 SIZES

This standard covers the following nominal valve size ranges:

Type 'A' valves:

a. Classes 125 and 250, 2 ≤ NPS ≤ 48 (excluding NPS 3 1/2).
b. Classes 150 and 300, 2 ≤ NPS ≤ 48*
c. Class 600, 2 ≤ NPS ≤ 42*
d. Classes 900 and 1500, 2 ≤ NPS ≤ 24*
e. Class 2500, 2 ≤ NPS ≤ 12*

Type 'B' valves:

f. Classes 150 through 1500, 2 ≤ NPS ≤ 24*
g. Class 2500, 2 ≤ NPS ≤ 12*

Note: *Valve sizes NPS 3 1/2 and 5 are non-preferred sizes whose usage is discouraged.

1.3 VALVE NOMENCLATURE

The standard nomenclature for valve parts is shown in Figures 1, 2, 3, 4 and 5. Figures 1, 2, 3 and 4 illustrate typical Type 'A' check valves and Figure 5 illustrates a typical Type 'B' check valve. These figures show typical designs only and are not to be construed as precluding other available designs that comply with the requirements of this standard. The only purpose of these figures is to identify part names. The construction of a valve is acceptable only when it complies with this standard in all respects.

2 Normative References

The following standards contain provisions which, through reference in this text, constitute provisions of this standard. At the time of publication of this standard, the editions of record are valid. All standards are subject to revision and parties to agreements based on this standard are encouraged to investigate the possibility of applying the most recent editions of the standards indicated below.

API

Std 598	*Valve Inspection and Testing*
API 600	*Bolted Bonnet Steel Gate Valves for Petroleum and Natural Gas Industries*

ASME[1]

B1.1	*Unified Inch Screw Threads (UN and UNR Thread Form)*
B16.1	*Cast Iron Pipe Flanges and Flanged Fittings*
B16.5	*Pipe Flanges and Flanged Fittings*
B16.10	*Face-to-Face and End-to-End Dimensions of Valves*
B16.11	*Forged Steel Fittings, Socket-Welding and Threaded*
B16.14	*Ferrous Pipe Plugs, Bushings, and Locknuts with Pipe Threads*
B16.20	*Metallic Gaskets for Pipe Flanges—Ring Joint, Spiral Wound, and Jacketed*
B16.25	*Butt-welding Ends*
B16.34	*Valves—Flanged, Threaded and Welding End*
B16.42	*Ductile Iron Pipe Flanges and Flanged Fittings, Classes 150 and 300*
B16.47	*Large Diameter Steel Flanges; NPS 26 Through NPS 60*
B18.15	*Forged Eyebolts*

ASTM[2]

A 182	*Forged or Rolled Alloy-Steel Pipe Flanges, Forged Fittings, and Valves and Parts for High-Temperature Service*
A 217	*Steel Castings, Martensitic Stainless and Alloy, for Pressure-Containing Parts Suitable for High-Temperature Service*
A 351	*Castings, Austenitic, Austenitic-Ferritic (Duplex), for Pressure Containing Parts*
A494	*Castings, Nickel and Nickel Alloy*

[1]ASME International, 3 Park Avenue, New York, New York 10016-5990. www.asme.org
[2]ASTM International, 100 Barr Harbor Drive, West Conshohocken, Pennsylvania 19428-2959. www.astm.org

Copyright American Petroleum Institute
Reproduced by IHS under license with API
No reproduction or networking permitted without license from IHS
Not for Resale

B 473	*UNS N08020, UNS N08024, and UNS N08026 Nickel Alloy Bar and Wire*
B 564	*Nickel Alloy Forgings*
AWS[3]	
A5.9	*Corrosion-Resisting Chromium and Chromium-Nickel Steel Bare and Composite Metal Cored and Stranded Welding Electrodes and Welding Rods*
A5.13	*Solid Surfacing Welding Rods and Electrodes*
MSS[4]	
SP-6	*Standard Finishes for Contact Faces of Pipe Flanges and Connecting-End Flanges of Valves and Fittings*
SP-25	*Standard Marking System for Valves, Fittings, Flanges and Unions*
SP-44	*Steel Pipe Line Flanges*

3 Pressure-temperature Ratings

3.1 VALVE RATING

The pressure-temperature rating of the valve shall be that of the body unless otherwise limited by construction details or material considerations, e.g., those imposed by resilient seals or special trim.

3.2 BODY RATING

The pressure-temperature rating of the valve body for various body materials shall be as follows:

Type 'A' valves only:

a. Gray iron: The pressure-temperature rating for the applicable flange class as specified in ASME B16.1.

b. Ductile iron: The pressure-temperature rating for the applicable flange class as specified in ASME B16.42.

Type 'A' and Type 'B' valves:

c. Steel, nickel alloy and other alloy: The pressure-temperature rating shall be in accordance with Standard Class ratings of Table 2, ASME B16.34 for the applicable Group 1, 2 or 3 material of Table 1, ASME B16.34.

d. Special materials: The pressure-temperature rating for materials not covered by ASME B16.34 shall be as agreed between purchaser and manufacturer.

[3]American Welding Society, 550 N.W. LeJeune Road, Miami, Florida 33135. www.aws.org

[4]Manufacturers Standardization Society of the Valve and Fittings Industry, Inc., 127 Park Street, N.E., Vienna, Virginia 22180. www.mss-hq.com

3.3 LIMITED RATING

Where the pressure-temperature rating of the valve is limited as described in 3.1 the materials shall be specified by the manufacturer. Any pressure or temperature limitation shall be marked on the nameplate, as required in 7.2.

4 Design

4.1 BODY AND COVER

4.1.1 The minimum body wall thickness for various materials shall be as follows:

Type 'A' valves only:

a. Gray iron: as shown in Tables 1A and 1B for Class 125 and Class 250 only.

b. Ductile iron: as shown in Tables 1A and 1B for Class 150 and Class 300 only.

Type 'A' and Type 'B' valves:

c. Steel and chrome-moly steels per ASME B16.34, Table 1, Group 1: as shown in Tables 1A and 1B, for Classes 150, 300, 600, 900, 1500 and 2500

d. Nickel-base alloys per ASME B16.34, Table 1, Group 2 and other alloys per ASME B16.34, Table 1, Group 3:

1. For Classes 150, 300 and 600 only: as shown in ASME B16.34, Table 3.
2. For Classes 900, 1500 and 2500: as shown in Tables 1A and 1B.

e. Special materials: The minimum body wall thickness for materials not covered by ASME B16.34 shall be as agreed between the purchaser and manufacturer.

4.1.2 The face-to-face dimensions shall be as follows: Type 'A' valves (including valves with ring-joint facings) shall conform to those shown in Tables 2A and 2B. Type 'B' valves shall conform to ASME B16.10. Short pattern or special lengths are not permitted unless by agreement between purchaser and manufacturer.

4.1.3 The purchase order shall specify for Type 'A' valves whether the body type shall be wafer, lug or double flanged and for Type 'B' valves whether the body type shall be flanged or butt-welding. Type 'A' double-flanged valves will only be supplied where nut space between flanges is adequate. End and cover flanges of steel, nickel alloy and other alloy valves shall be integrally cast or forged with the body. However, flanges may be attached by full penetration butt-welding if agreed to by the purchaser. Flanges shall conform to ASME B16.5 and have butt-welding ends for use without backing rings. Welding and examination shall conform to ASME B31.3 for Normal Fluid Service, unless otherwise specified, including qualifications for the weld procedure and welder or welding operator. The finished weld thickness shall not be less than the minimum body wall thickness. Heat treatment shall be performed in accordance with the material

Copyright American Petroleum Institute
Reproduced by IHS under license with API
No reproduction or networking permitted without license from IHS
Not for Resale

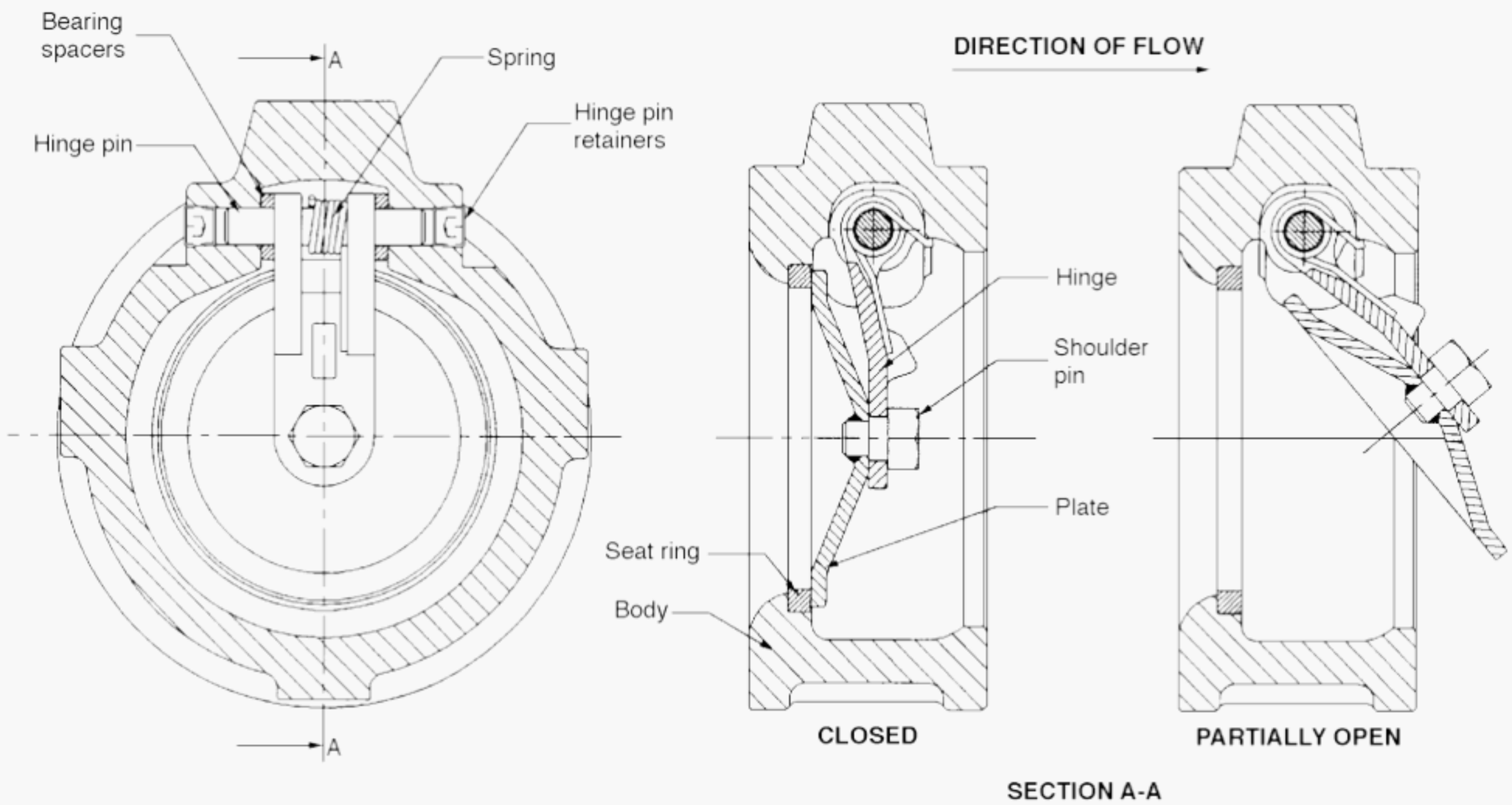

Note: The optional configuration of a full flange or lug flange (similar to that shown in Figure 3) and of a double-flanged type (similar to that of Figure 4) shall be the manufacturer's standard unless otherwise specified in the purchase order. All notes on Figures 3 and 4 apply.

Figure 1—Typical Type 'A' Single-plate Wafer Check Valve

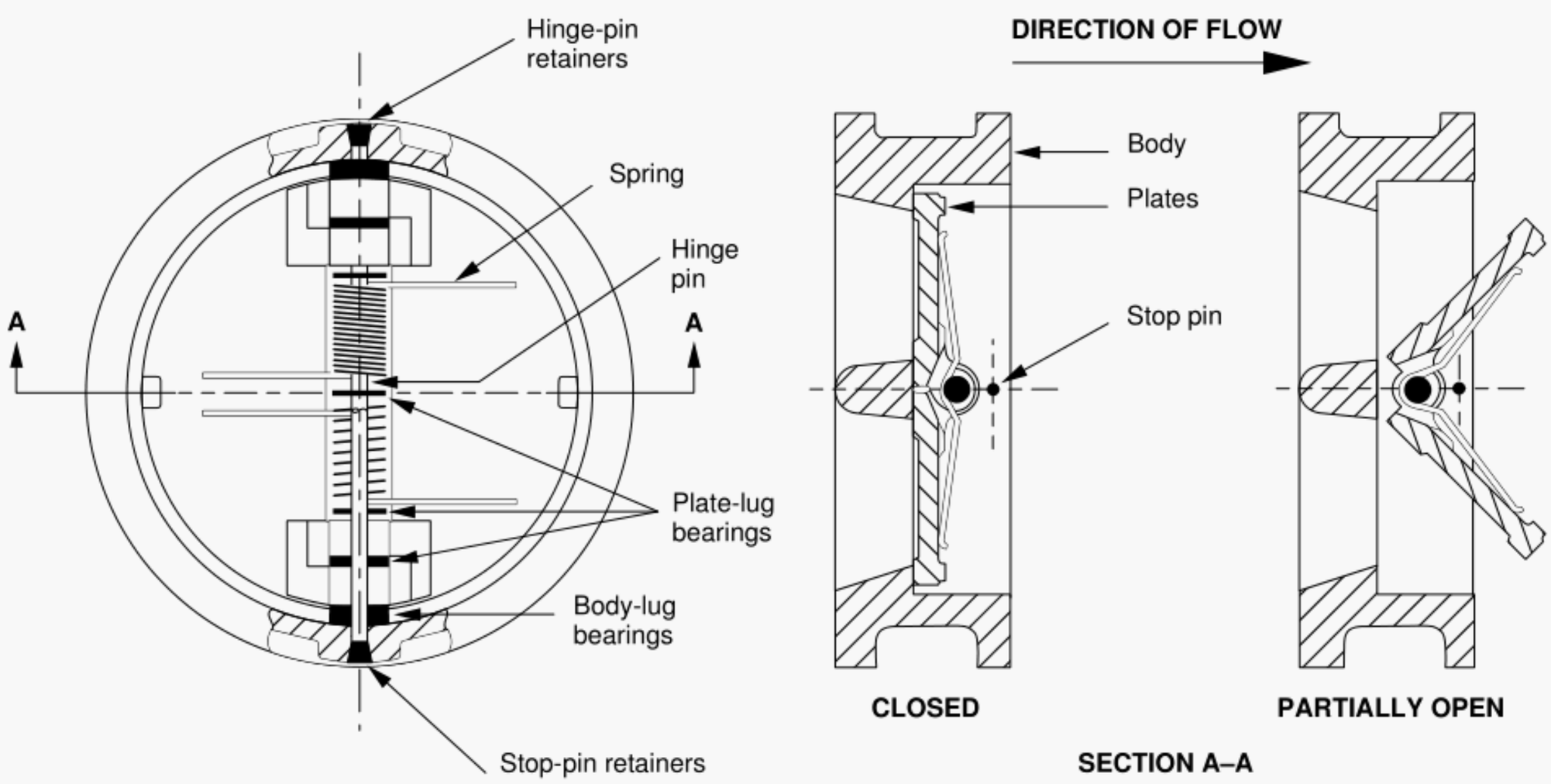

Figure 2—Typical Type 'A' Dual-plate Wafer Check Valve

Copyright American Petroleum Institute
Reproduced by IHS under license with API
No reproduction or networking permitted without license from IHS
Not for Resale

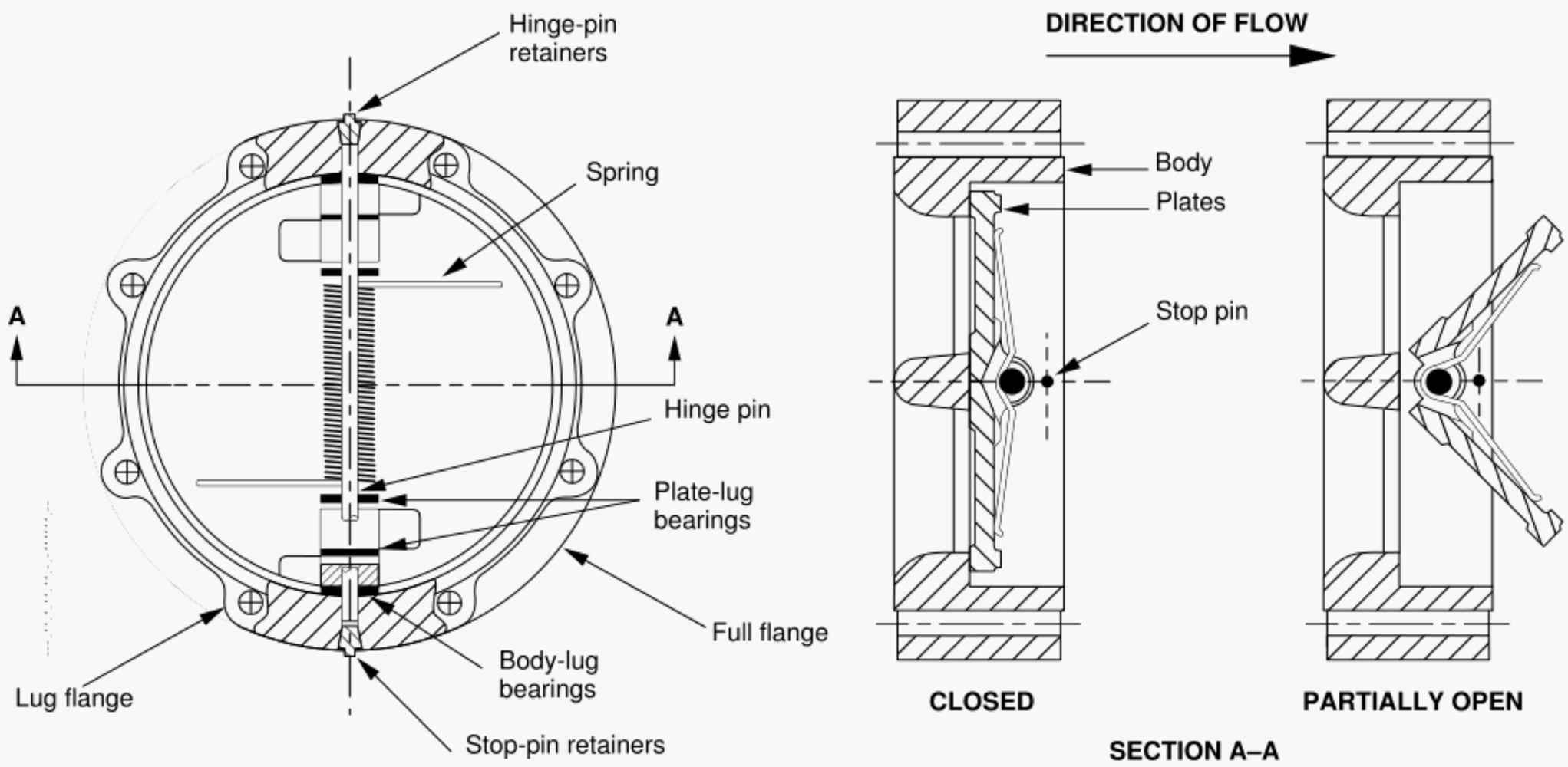

Notes:
1. The optional configuration of a full flange or lug flange shall be the manufacturer's standard unless otherwise specified by the purchaser.
2. Unless otherwise specified in the purchase order, the bolt holes will be through-drilled.

Figure 3—Typical Type 'A' Dual-plate Lug Check Valve

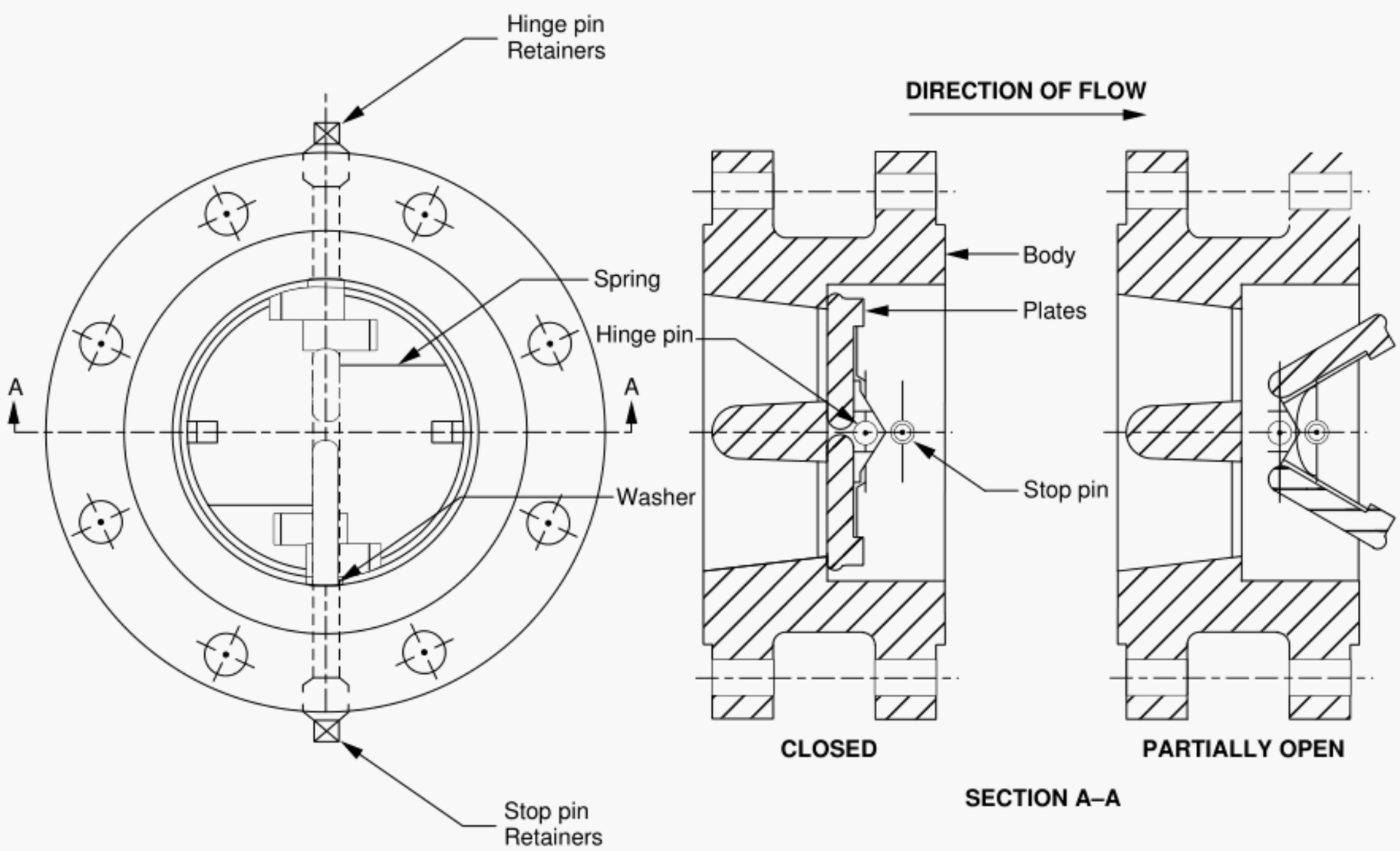

Notes:
1. Double-flanged valves shall only be supplied where nut space between flanges is adequate.
2. Unless otherwise specified in the purchase order, the bolt holes will be through-drilled (see 4.1.11).

Figure 4—Typical Type 'A' Dual-plate Double-flanged Check Valve

Copyright American Petroleum Institute
Reproduced by IHS under license with API
No reproduction or networking permitted without license from IHS
Not for Resale

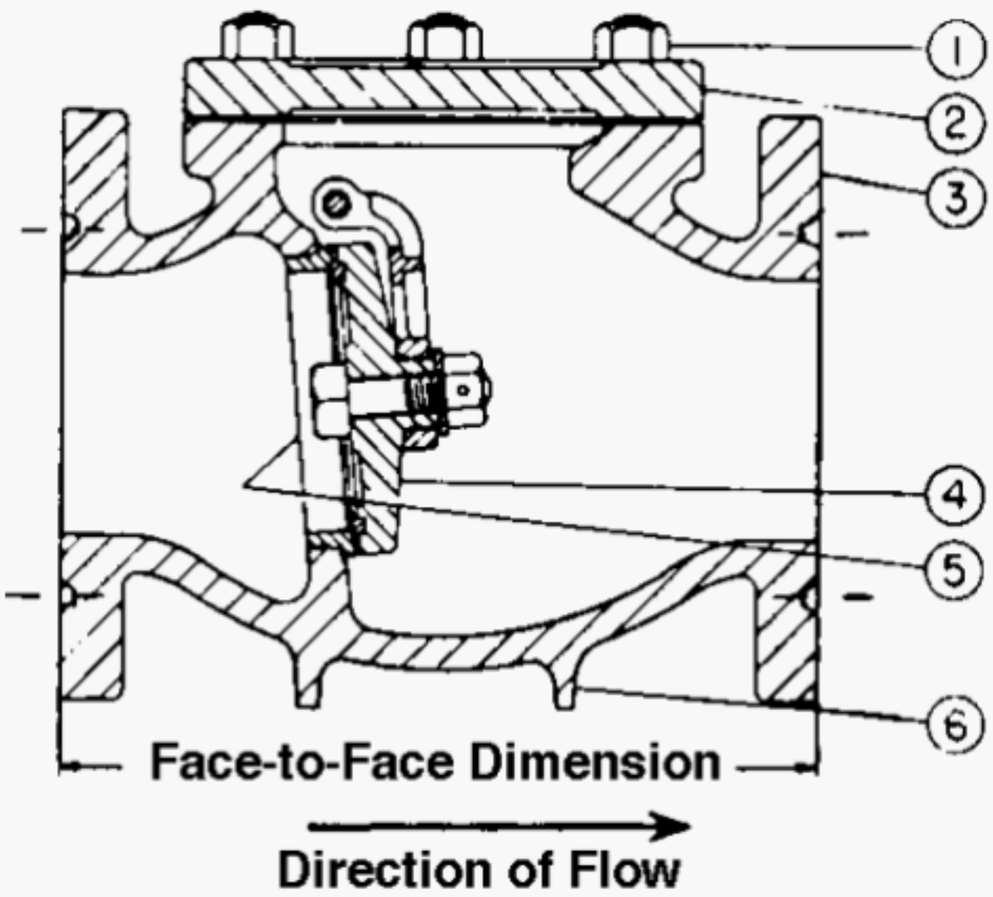

Part Names

1. Cover studs and nuts
2. Cover
3. Body
4. Disc
5. Seat Ring
6. Support ribs or legs

Figure 5—Typical Type 'B' Flanged Check Valve

specification and shall be done prior to required valve pressure testing.

4.1.4 Type 'A' valves larger than NPS 24 in Classes 150, 300, and 600 shall have body-flange bolt patterns suitable for the lug or double-flanged type, outside diameters suitable for the wafer type, and gasket surface dimensions compatible with the flange standards specified in the purchase order.

4.1.5 Flange faces with ring-joint grooves shall conform to the dimensions shown in either ASME B16.5 or ASME B16.47, as applicable.

4.1.6 Flange facing finishes shall be:

Type 'A' valves only: Gray iron and ductile iron valves shall be finished as specified in MSS SP-6.

Type 'A' and Type 'B' valves: Steel, nickel-alloy and other alloy valves shall be finished as specified in ASME B16.5.

4.1.7 Auxiliary connections are required only when specified by the purchaser:

Type 'A' valves only: For gray iron and ductile iron valves the size, type and location of auxiliary connections shall be the manufacturer's standard unless otherwise agreed by the manufacturer and the purchaser.

Type 'A' and Type 'B' valves: For steel, nickel alloy and other alloy valves auxiliary connections shall comply with the requirements of ASME B16.34, Section 6.3. The location and designation of auxiliary connections shall be: a) manufacturer's standard for Type 'A' valves and b) per ASME B16.34, Figure 1(b) for Type 'B' valves.

4.1.8 The valve may have either an integral or a removable seat ring. Sealing compounds or greases shall not be used when assembling seat rings, however, a light lubricant having a viscosity no greater than kerosene may be used to prevent galling of mating threaded surfaces.

4.1.9 Tapped test openings are permitted only if specified in the purchase order. If a tap is made in the body for testing the valve, the tap shall not be larger than NPS $^1/_2$. After testing, the tapped hole shall be fitted with an ASME B16.11 or ASME B16.14 threaded solid round or hex-head plug. The test tap may require a boss to provide the minimum thread engagement, as specified in ASME B16.34.

4.1.10 For Type 'A' valves a tapped hole shall be provided in the body of valves which are either NPS 10 or larger, or which weigh more than 50 lb. (23 kg), for attachment of an eye bolt or equivalent lifting device. The hole shall be tapped with a coarse (UNC) Class 2B thread, conforming to ASME B1.1. If an eyebolt is specified in the purchase order, it shall conform to ASME B18.15.

4.1.11 Unless otherwise specified in the purchase order, for Type 'A' valves the lugs of lug type valves and flanges of double-flanged type valves shall be provided with non-threaded (drilled) bolt clearance holes.

4.1.12 Butt-welding ends shall conform to the requirements of ASME B16.25 for the bore specified for use without backing rings.

4.1.13 Conversion of a flanged end to a butt-welding end is not permitted except by agreement between the purchaser and manufacturer.

4.1.14 Type 'B' valves shall have a bolted cover design that meets the requirements of ASME BPVC, Section VIII, flat covers shall conform to UG 34 and dished covers shall conform to Appendix I-6. Cover and cover flanges shall be circular except NPS 2 and NPS $2^1/_2$. Body-to-cover joint shall be flanged with a flat face (Class 150 only), raised face, tongue and groove, spigot and recess, or ring joint per ASME B16.5.

4.1.15 The body-to-cover joint of Type 'B' valves shall have at least four through type bolts of the following minimum sizes:

Valve Size NPS	Bolt Size, Min.
$^1/_2 - 2^1/_2$	$^3/_8$
3 – 8	$^1/_2$
10 and larger	$^5/_8$

Copyright American Petroleum Institute
Reproduced by IHS under license with API
No reproduction or networking permitted without license from IHS
Not for Resale

The total cross-sectional area of the bolts shall be in accordance with the requirements of ASME B16.34.

4.1.16 When valve design utilizes a stem that extends beyond the pressure boundary, it shall be provided with a means so that, in the event of a structural failure of stem-to-closure attachment items, the stem will not be ejected through the pressure boundary while the valve is under pressure.

4.2 PLATES AND DISC

Valves are classified as follows:

a. A single-plate valve has a plate or disc that closes the valve when flow reversal or gravity forces the plate or disc against the valve-body seat. This closure may be aided by the use of springs or other devices.
b. A dual-plate valve has plates that close the valve with the assistance of one or more springs, when flow reversal forces the plates against the valve-body seat.
c. For Type 'A' single-plate valves and Type 'B' valves, when a nut is used to assemble the disc or plate to the hinge arm, the nut shall be secured to prevent separation; the use of a single tack weld, lock washer or lock nut are not acceptable means.

4.3 SEATING SURFACES

4.3.1 The body and plate or disc seating surfaces may be of deposited weld metal, integral metal, mechanically retained metal, or a resilient material. On Type 'A' single-plate valves and Type 'B' valves, a resilient seal ring may be fitted either to the body or plate seat as specified by the purchaser. The ring shall be designed to give a full metal to metal seal if the resilient seal is inoperative or removed.

4.3.2 Welding is not permitted on cast iron or ductile iron.

4.3.3 Brazing is permitted on cast iron and ductile iron only for attaching seating surfaces to the body or the plate and only if agreed to by the purchaser and the manufacturer. Furnace brazing is the only type of brazing permitted and may be used only if the parts are heated under closely controlled conditions, in a uniform manner, and to a temperature no higher than the lower critical temperature of the base material. Cooling shall be in the furnace or in still air.

4.4 EXTERNAL BOLTS AND THREADED HOLES

4.4.1 Bolts and threaded holes with a diameter 1 in. or smaller shall have coarse (UNC) threads. Those larger than 1 in. diameter shall be of the eight-thread series (8 UN). Bolt threads shall be Class 2A, and nut threads shall be Class 2B. Threads shall conform to ASME B1.1.

4.4.2 For bolts 1 in. diameter or smaller, threaded body-flange bolt holes shall be drilled and tapped according to the requirements for coarse thread series Class 2B in ASME B1.1. For bolts larger than 1 in. diameter, such holes shall be drilled and tapped according to the requirements for eight-thread series Class 2B in ASME B1.1.

4.4.3 For Type 'B' valves, cover flange bolts shall be continuously threaded stud bolts with heavy, semifinished hexagon nuts conforming to the requirements of ASME B18.2.2. Hex bolts or cap screws conforming to ASME B18.2.1 may also be used for NPS $2^1/2$ and smaller valves. Hex bolts and cap screws shall be suitable for external wrenching only.

4.5 FLOW INDICATION

The valve body shall be furnished with a clearly visible cast, forged, machined-in, or die-stamped arrow to indicate the direction of flow through the valve.

4.6 GASKET SURFACE

Fasteners in the flange seating surface shall be recessed to or below the flange gasket level. Interruptions in the seating area of a centered ASME B16.20 spiral wound gasket for valve sizes NPS 6 and larger shall not exceed the limitations given in Figure 6. The permissible surface interruptions on smaller size valves shall be as agreed between purchaser and manufacturer but shall not exceed 50% of the gasket seating width.

Note: The degree of interruption may affect the sealability of a spiral-wound gasket.

5 Material

5.1 BODY AND COVER

The body of Type 'A' valves and the body and cover of Type 'B' valves shall be made of a material conforming to a purchaser selected material specification listed in the applicable ASME standard as referenced in 3.2.

5.2 PLATE AND DISC

Plate and or disc shall be made of a material whose corrosion resistance is greater than or equal to that of the valve body.

5.3 COVER GASKET (TYPE 'B' VALVES)

5.3.1 The cover flange gasket shall be a) corrugated or flat solid metal; b) corrugated or flat filled metal jacketed; c) a metal ring joint; d) for use only in Class 150, a flexible graphite reinforced with, tanged, or corrugated metal insert; or e) for use only in round covers, a filled spiral-wound metal. A filled spiral-wound metal gasket is acceptable, provided the gasket incorporates a centering/compression ring or the cover-to-body joint design provides inherent compression control to ensure the proper seating of the gasket. The gasket filler material shall be suitable for the conditions specified in 5.3.3.

Copyright American Petroleum Institute
Reproduced by IHS under license with API
No reproduction or networking permitted without license from IHS
Not for Resale

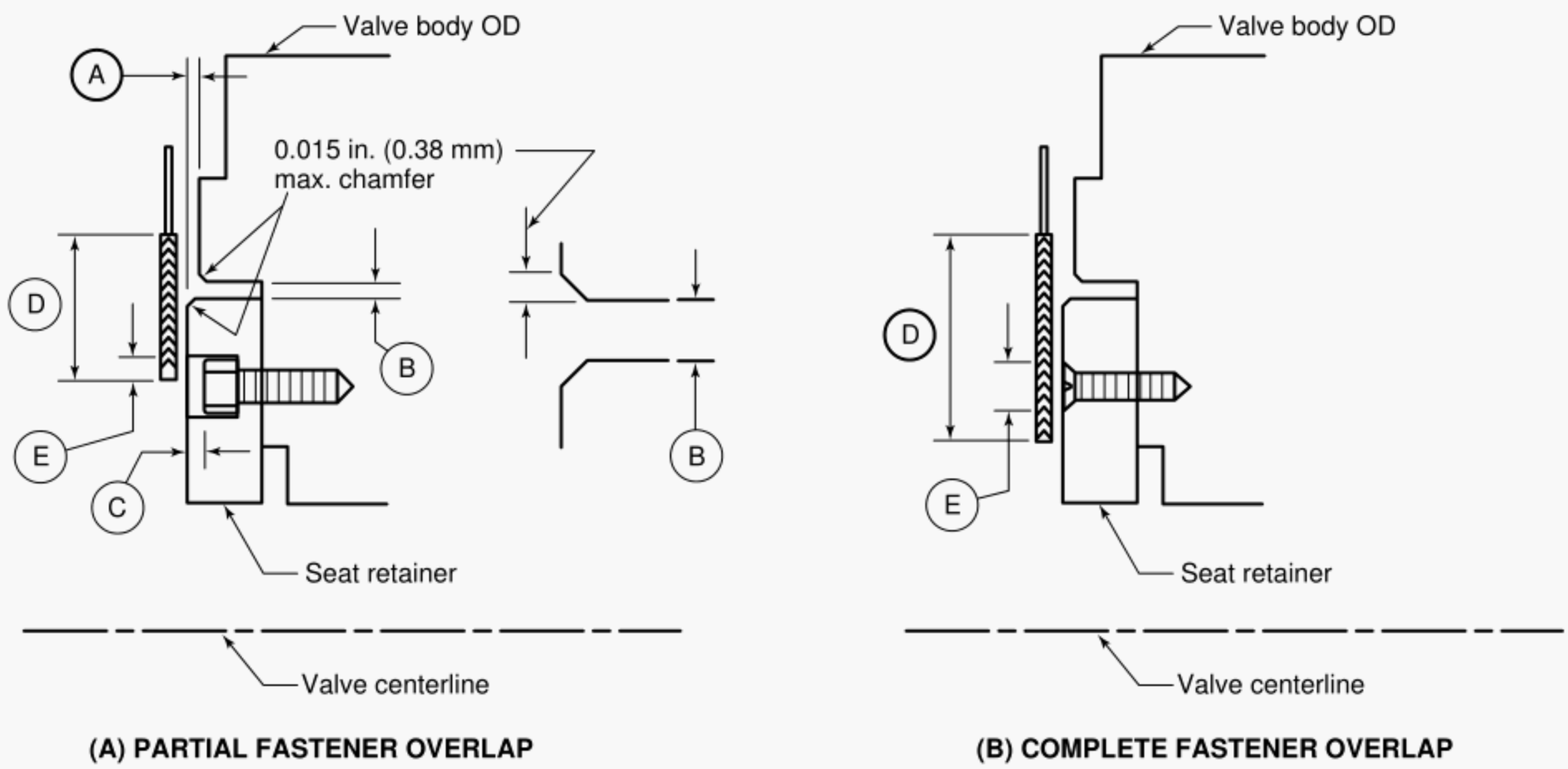

Dimension	Definition	Range, in.	Range, mm
A	Protrusion of seat retainer plate above valve body face (after being compressed by mating flange). Negative value denotes insert below valve body face.	+0.010 to –0.010	+0.25 to –0.25
B	Radial width of annular gap between valve body and seat retainer plate (exclusive of chamfer).	0.030 max.	0.76 max.
C	Distance of screw head below face of seat retainer plate.	0 – 0.050	0 – 1.27
D	Width of sealing area of spiral-wound gasket for valve's size and rating.	—	—
E	Distance gasket sealing area overlaps fastener opening in face of seat retainer plate (may occur at the ID or OD of the gasket).	35% of D (max.)	35% of D (max.)

Figure 6—Limitations for Flange Face Interruptions That Fall within the Gasket Seating Area

5.3.2 The metallic portion of the gasket exposed to the service environment shall be made of a material that has corrosion resistance at least equal to the body.

5.3.3 Unless otherwise specified in the purchase order, the gasket shall be suitable for the pressure rating of the valve within a valve design temperature range from –20°F (–29°C) to 1000°F (538°C).

5.4 TRIM

5.4.1 The trim includes the following:

a. Body seating surfaces.
b. Plate or disc seating surfaces.

5.4.2 Metallic seating surface material shall be manufacturer's standard which may be the same as the body material. Where specific trim is requested, it shall be as shown in Table 3. The typical specifications in Table 3 represent some acceptable grades. The resilient seal material, when required shall be specified by the purchaser and if located in the body there shall not be an overlay in the seat area unless otherwise specified in the purchase order.

5.5 INTERNAL WETTED PARTS

Internal wetted parts shall be the manufacturers' standard unless otherwise specified in the purchase order. The term "wetted parts" shall include, but not be limited to, stem or shaft, hinges, pins, bolts, bearings, and any other part in contact with the fluid medium other than the body, cover, plates or disc, trim, springs and pipe plugs.

5.6 BODY SEAT RINGS

If the body seat ring material is different from the seating-surface material, its corrosion resistance shall be greater than or equal to that of the valve-body material.

Copyright American Petroleum Institute
Reproduced by IHS under license with API
No reproduction or networking permitted without license from IHS
Not for Resale

Table 1A—Minimum Body-wall Thickness by Class (in.)

Valve Size (NPS)	Class							
	125	250	150	300	600	900	1500	2500
2	0.27	0.39	0.34	0.38	0.44	0.75	0.75	0.88
2 1/2	0.27	0.43	0.38	0.44	0.47	0.88	0.88	1.00
3	0.33	0.49	0.41	0.47	0.50	0.75	0.94	1.19
4	0.43	0.54	0.44	0.50	0.63	0.84	1.13	1.41
5	0.43	0.60	—	—	—	—	—	—
6	0.49	0.65	0.47	0.63	0.75	1.03	1.50	1.91
8	0.54	0.71	0.50	0.69	1.00	1.25	1.88	2.44
10	0.65	0.82	0.56	0.75	1.13	1.44	2.25	2.66
12	0.71	0.88	0.63	0.81	1.25	1.66	2.63	3.41
14	0.77	0.98	0.66	0.88	1.38	1.81	2.75	—
16	0.88	1.09	0.69	0.94	1.50	2.06	3.13	—
18	0.93	1.21	0.72	1.00	1.63	2.25	3.50	—
20	0.98	1.31	0.75	1.06	1.75	2.50	3.88	—
24	1.09	1.42	0.81	1.19	2.00	2.88	4.50	—
30	1.26	1.75	0.91	1.38	2.38	—	—	—
36	1.42	2.08	1.00	1.57	2.77	—	—	—
42	1.58	2.41	1.09	1.76	3.15	—	—	—
48	1.75	2.73	1.19	1.95	—	—	—	—

Note: The wall thickness shown for Classes 125 and 250 conform to those in ASME B16.1, except for NPS 36, 42, and 48, Class 250, which have been extrapolated. The wall thicknesses shown for Classes 150 – 2500 for sizes through NPS 24 conform to those in API Std 600. The wall thicknesses for NPS 30 – 48 are extrapolations of the values in API Std 600.

Table 1B—Minimum Body-wall Thickness by Class (mm)

Valve Size (NPS)	Class							
	125	250	150	300	600	900	1500	2500
2	6.9	9.9	8.6	9.7	11.2	19.1	19.1	22.4
2 1/2	6.9	10.9	9.7	11.2	11.9	22.4	22.4	25.4
3	8.4	12.4	10.4	11.9	12.7	19.1	23.9	30.2
4	10.9	13.7	11.2	12.7	16.0	21.3	28.7	35.8
5	10.9	15.2	—	—	—	—	—	—
6	12.4	16.5	11.9	16.0	19.1	26.2	38.1	48.5
8	13.7	18.0	12.7	17.5	25.4	31.8	47.8	62.0
10	16.5	20.8	14.2	19.1	28.7	36.6	57.2	67.6
12	18.0	22.4	16.0	20.6	31.8	42.2	66.8	86.6
14	19.6	24.9	16.8	22.4	35.1	46.0	69.9	—
16	22.4	27.7	17.5	23.9	38.1	52.3	79.5	—
18	23.6	30.7	18.3	25.4	41.4	57.2	88.9	—
20	24.9	33.3	19.1	26.9	44.5	63.5	98.6	—
24	27.7	36.1	20.6	30.2	50.8	73.2	114.3	—
30	32.0	44.5	23.1	35.1	60.5	—	—	—
36	36.1	52.8	25.4	39.9	70.4	—	—	—
42	40.1	61.2	27.7	44.7	80.0	—	—	—
48	44.5	69.3	30.2	49.5	—	—	—	—

Note: The wall thicknesses shown for Classes 125 and 250 conform to those in ASME B16.1, except for NPS 36, 42, and 48, Class 250, which have been extrapolated. The wall thicknesses shown for Classes 150 – 2500 for sizes through NPS 24 conform to those API Std 600. The wall thicknesses for NPS 30 – 48 are extrapolations of the values in API Std 600.

--`,,,,,,-`-`,,`,,`,`,,`---

Copyright American Petroleum Institute
Reproduced by IHS under license with API
No reproduction or networking permitted without license from IHS

Not for Resale

Table 2A—Type 'A' Valve Face-to-Face Dimensions by Class (in.)

Valve Size (NPS)	Class							
	125	250	150	300	600	900	1500	2500
2	2.12	2.12	2.38	2.38	2.38	2.75	2.75	2.75
2 1/2	2.38	2.38	2.62	2.62	2.62	3.25	3.25	3.25
3	2.62	2.62	2.88	2.88	2.88	3.25	3.25	3.38
4	2.62	2.62	2.88	2.88	3.12	4.00	4.00	4.12
5	3.25	3.25	—	—	—	—	—	—
6	3.75	3.75	3.88	3.88	5.38	6.25	6.25	6.25
8	5.00	5.00	5.00	5.00	6.50	8.12	8.12	8.12
10	5.50	5.50	5.75	5.75	8.38	9.50	9.75	10.00
12	7.12	7.12	7.12	7.12	9.00	11.50	12.00	12.00
14	7.25	8.75	7.25	8.75	10.75	14.00	14.00	—
16	7.50	9.12	7.50	9.12	12.00	15.12	15.12	—
18	8.00	10.38	8.00	10.38	14.25	17.75	18.44	—
20	8.38	11.50	8.62	11.50	14.50	17.75	21.00	—
24	8.75	12.50	8.75	12.50	17.25	19.50	22.00	—
30	12.00	14.50	12.00	14.50	19.88	—	—	—
36	14.50	19.00	14.50	19.00	25.00	—	—	—
42	17.00	22.38	17.00	22.37	27.61	—	—	—
48	20.62	24.75	20.62	24.75	—	—	—	—

Note: The face-to-face tolerance shall be as specified in ASME B16.10 for sizes through NPS 24 and shall be ±0.125 in. (3 mm) for sizes larger than NPS 24.

Table 2B—Type 'A' Valve Face-to-Face Dimensions by Class (mm)

Valve Size (NPS)	Class							
	125	250	150	300	600	900	1500	2500
2	54	54	60	60	60	70	70	70
2 1/2	60	60	67	67	67	83	83	83
3	67	67	73	73	73	83	83	86
4	67	67	73	73	79	102	102	105
5	83	83	—	—	—	—	—	—
6	95	95	98	98	136	159	159	159
8	127	127	127	127	165	206	206	206
10	140	140	146	146	213	241	248	254
12	181	181	181	181	229	292	305	305
14	184	222	184	222	273	356	356	—
16	191	232	191	232	305	384	384	—
18	203	264	203	264	362	451	468	—
20	213	292	219	292	368	451	533	—
24	222	318	222	318	438	495	559	—
30	305	368	305	368	505	—	—	—
36	368	483	368	483	635	—	—	—
42	432	568	432	568	701	—	—	—
48	524	629	524	629	—	—	—	—

Note: The face-to-face tolerance shall be as specified in ASME B16.10 for sizes through NPS 24 and shall be ±0.125 in. (3 mm) for sizes larger than NPS 24.

--`,,,,,,-`-`,,`,,`,`,`,,`---
Copyright American Petroleum Institute
Reproduced by IHS under license with API
No reproduction or networking permitted without license from IHS
Not for Resale

Table 3—Seating-surface Nominal Trim Material

Trim No.	Nominal Trim	Material Type[a]	Typical Specification (Grade)		
			Cast	Forged	Welded
1	Type 410	11-13Cr	ASTM A 217 (CA15)	ASTM A 182 (F6)	AWS A5.9 (ER410)
2	Type 304	18Cr-8Ni	ASTM A 351 (CF8)	ASTM A 182 (F304)	AWS A5.9 (ER308)
5	Hard-faced	Co-Cr-A[b]	Manufacturer's standard	Manufacturer's standard	AWS A5.13 (E or R Co-Cr-A)
5A	Hard-faced	Ni-Cr[c]	Manufacturer's standard	Manufacturer's standard	Manufacturer's standard
8	F6 and Hard-faced	11-13Cr Co-Cr-A[b]	ASTM A 217 (CA15) Manufacturer's standard	ASTM A 182 (F6) Manufacturer's standard	AWS A5.9 (ER410) AWS A5.13 (E or R Co-Cr-A)
9	Monel	Ni-Cu alloy	ASTM A 494 (M-35-1)	ASTM B 564 (UNS N04400)	Manufacturer's standard
10	Type 316	18Cr-8Ni-Mo	ASTM A 351 (CF8M)	ASTM A 182 (F316)	AWS A5.9 (ER316)
12	Type 316 and Hard-faced	18Cr-8Ni-Mo Trim 5 or 5A	ASTM A 351 (CF8M)	ASTM A 182 (F316)	AWS A5,9 (ER316) Trim 5 or 5A
13	Alloy 20	19Cr-29Ni	ASTM A 351 (CN7M)	ASTM B 473	AWS A5.9 (ER320)
14	Alloy 20 and Hard-faced	19Cr-29Ni Trim 5 or 5A	ASTM A 351 (CN7M)	ASTM B 473	AWS A5.9 (ER320) Trim 5 or 5A
AA	Bronze	Bronze	Manufacturer's standard	Manufacturer's standard	—

[a]Resilient seating materials shall be specified by the purchaser.
[b]This classification includes but is not limited to, such trademarked materials as Stellite 6™, Stoody 6™, and Wallex 6™.
[c]These materials shall have manufacturer's standard hard facing with a maximum iron content of 25%.

5.7 SPRINGS

Depending on the service, the material requirements for the spring may differ from those of the seat and other trim material and will be the manufacturer's standard unless otherwise specified in the purchase order.

5.8 PIPE PLUGS (PIN RETAINERS)

Any pipe plugs used shall be solid and shall have the same nominal chemical composition and material properties, as does the valve body.

5.9 NAMEPLATE

The nameplate shall be austenitic stainless steel or nickel alloy and shall be attached to the valve body by pins or welding. The pin material used for attachment shall be similar to the nameplate.

6 Inspection, Examination, Testing, and Repair

6.1 INSPECTION AND EXAMINATION

6.1.1 Each valve shall be visually examined by the manufacturer in accordance with API Std 598.

6.1.2 When inspection by the purchaser is specified by the purchase order, it shall be in accordance with API Std 598.

6.2 PRESSURE TESTS

Each valve shall be pressure tested in accordance with API Std 598.

6.3 REPAIR OF DEFECTS

6.3.1 Defects in the body and cover of a cast or forged, carbon or alloy steel valve may be repaired as permitted by the most nearly applicable ASTM cast or forged material specification listed in ASME B16.34.

Copyright American Petroleum Institute
Reproduced by IHS under license with API
No reproduction or networking permitted without license from IHS
Not for Resale

6.3.2 The repair of defects in cast iron or ductile iron castings, by methods such as welding, brazing, plugging, or impregnation, is not permitted.

7 Marking

7.1 NAMEPLATES

Nameplates (see 5.9) of valves made in compliance with this standard shall be marked "API 594" and shall be additionally marked as follows:

7.1.1 For a valve in accordance with ASME B16.34, the markings shall be in accordance with that standard.

7.1.2 For a valve made of other materials, marking shall be in accordance with MSS SP-25.

7.2 LIMITED RATING

Where pressure or temperature rating is limited by construction details or material considerations as described in 3.3, such limited rating shall be marked on the nameplate.

8 Shipment

8.1 COATINGS

8.1.1 The machined surfaces of materials that are not rust resistant shall be coated with an easily removable rust preventive.

8.1.2 Coatings shall not contain lead. Nonferrous and austenitic stainless steel valves shall not be coated. Unless otherwise specified in the purchase order, the external surfaces of valve bodies shall be painted with the following colors:

a. Carbon and low—alloy steel-aluminum.
b. Ductile iron—green.
c. Cast iron—black.

8.2 VALVE OPENINGS

8.2.1 Except for the ends of small, individually packaged valves, valve ends shall be covered to protect the gasket surfaces and valve internals during shipment and storage. The protective covers shall be wood, wood fiber, plastic, or metal and securely attached to the valve ends by bolts, steel straps, or suitable friction locking devices. The covers shall be no smaller than the outside diameter of the valve ends and designed so that the valves cannot be installed without complete removal of the covers.

8.2.2 All threaded connections in the valve body shall be fitted with solid, fully tightened plugs conforming to ASME B16.11, or ASME B16.14. Gray iron or malleable iron plugs shall only be used on gray iron or ductile iron valves respectively.

8.3 PACKAGING

8.3.1 When export packaging is not specified in the purchase order, valves may be shipped loose, palletized, or packed in a box or crate. Valves shall be packaged to prevent damage during shipment.

8.3.2 When the purchase order specifies export packaging, valves shall be shipped in wooden boxes or crates, individually or collectively, and packed to prevent their shifting within the package. (The shipping agent representing the purchaser will normally provide detailed instructions.)

9 Recommended Spare Parts

When specified on the purchase order, the vendor shall submit a complete list of spare parts. The list shall include cross-sectional or assembly-type drawings for identification with part numbers.

Copyright American Petroleum Institute
Reproduced by IHS under license with API
No reproduction or networking permitted without license from IHS
Not for Resale

Copyright American Petroleum Institute
Reproduced by IHS under license with API
No reproduction or networking permitted without license from IHS
Not for Resale

API®

American Petroleum Institute

2004 Publications Order Form

Effective January 1, 2004.
API Members receive a 50% discount where applicable.
The member discount does not apply to purchases made for the purpose of resale or for incorporation into commercial products, training courses, workshops, or other commercial enterprises.

Available through Global Engineering Documents:
Phone Orders: **1-800-854-7179** (Toll-free in the U.S. and Canada)
303-397-7956 (Local and International)
Fax Orders: **303-397-2740**
Online Orders: **www.global.ihs.com**

Date: _____ ❑ **API Member** (Check if Yes)

Invoice To (❑ Check here if same as "Ship To")

Name:
Title:
Company:
Department:
Address:
City: State/Province:
Zip/Postal Code: Country:
Telephone:
Fax:
E-Mail:

Ship To (UPS will not deliver to a P.O. Box)

Name:
Title:
Company:
Department:
Address:
City: State/Province:
Zip/Postal Code: Country:
Telephone:
Fax:
E-Mail:

Quantity	Product Number	Title	SO★	Unit Price	Total
	C59905	API Std 599, *Metal Plug Valves-Flanged, Threaded and Welding Ends*		$ 55.00	
	CX60011	API 600, *Bolted Bonnet Steel Gate Valves for Petroleum and Natural Gas Industries*		$ 80.00	
	C60207	API Std 602, *Compact Steel Gate Valves-Flanged, Threaded, Welding and Extended Body Ends*		$ 55.00	
	C60306	API Std 603, *Corrosion-Resistant, Bolted Bonnet Gate Valves-Flanged and Butt-Welding Ends*		$ 46.00	
	C60700	API Std 607, *Fire Test for Soft-Seated Quarter-turn Valves*		$ 52.00	
	C60803	API Std 608, *Metal Ball Valves-Flanged, Threaded and Butt-Welding Ends*		$ 70.00	
	C60906	API Std 609, *Butterfly Valves: Double Flanged, Lug- and Wafer-Type*		$ 60.00	
	C62101	API RP 621, *Reconditioning of Metallic Gate, Globe, and Check Valves*		$ 90.00	

❑ **Payment Enclosed** ❑ **P.O. No.** (Enclose Copy) _____

❑ **Charge My Global Account No.** _____

❑ **VISA** ❑ **MasterCard** ❑ **American Express** ❑ **Diners Club** ❑ **Discover**

Credit Card No.:
Print Name (As It Appears on Card):
Expiration Date:
Signature:

Subtotal	
Applicable Sales Tax *(see below)*	
Rush Shipping Fee *(see below)*	
Shipping and Handling *(see below)*	
Total *(in U.S. Dollars)*	

★ ***To be placed on Standing Order for future editions of this publication, place a check mark in the SO column and sign here:***

Pricing and availability subject to change without notice.

Mail Orders – Payment by check or money order in U.S. dollars is required except for established accounts. State and local taxes, $10 processing fee*, and 5% shipping must be added. Send mail orders to: **API Publications, Global Engineering Documents, 15 Inverness Way East, M/S C303B, Englewood, CO 80112-5776, USA.**
Purchase Orders – Purchase orders are accepted from established accounts. Invoice will include actual freight cost, a $10 processing fee*, plus state and local taxes.
Telephone Orders – If ordering by telephone, a $10 processing fee* and actual freight costs will be added to the order.
Sales Tax – All U.S. purchases must include applicable state and local sales tax. Customers claiming tax-exempt status must provide Global with a copy of their exemption certificate.
Shipping (U.S. Orders) – Orders shipped within the U.S. are sent via traceable means. Most orders are shipped the same day. Subscription updates are sent by First-Class Mail. Other options, including next-day service, air service, and fax transmission are available at additional cost. Call 1-800-854-7179 for more information.
Shipping (International Orders) – Standard international shipping is by air express courier service. Subscription updates are sent by World Mail. Normal delivery is 3-4 days from shipping date.
Rush Shipping Fee – Next Day Delivery orders charge is $20 in addition to the carrier charges. Next Day Delivery orders must be placed by 2:00 p.m. MST to ensure overnight delivery.
Returns – All returns must be pre-approved by calling Global's Customer Service Department at 1-800-624-3974 for information and assistance. There may be a 15% restocking fee. Special order items, electronic documents, and age-dated materials are non-returnable.
***Minimum Order –** There is a $50 minimum for all orders containing hardcopy documents. The $50 minimum applies to the order subtotal including the $10 processing fee, excluding any applicable taxes and freight charges. If the total cost of the documents on the order plus the $10 processing fee is less than $50, the processing fee will be increased to bring the order amount up to the $50 minimum. This processing fee will be applied before any applicable deposit account, quantity or member discounts have been applied. There is no minimum for orders containing only electronically delivered documents.

Copyright American Petroleum Institute
Reproduced by IHS under license with API
No reproduction or networking permitted without license from IHS
Not for Resale

There's more where this came from.

The American Petroleum Institute provides additional resources and programs to the oil and natural gas industry which are based on API® Standards. For more information, contact:

• API Monogram® Licensing Program	Phone:	202-962-4791
	Fax:	202-682-8070
• American Petroleum Institute Quality Registrar (APIQR®)	Phone:	202-962-4791
	Fax:	202-682-8070
• API Spec Q1® Registration	Phone:	202-962-4791
	Fax:	202-682-8070
• API Perforator Design Registration	Phone:	202-962-4791
	Fax:	202-682-8070
• API Training Provider Certification Program	Phone:	202-682-8490
	Fax:	202-682-8070
• Individual Certification Programs	Phone:	202-682-8064
	Fax:	202-682-8348
• Engine Oil Licensing and Certification System (EOLCS)	Phone:	202-682-8516
	Fax:	202-962-4739
• API PetroTEAM™ (Training, Education and Meetings)	Phone:	202-682-8195
	Fax:	202-682-8222

Check out the API Publications, Programs, and Services Catalog online at www.api.org.

API®
American Petroleum Institute

Helping You Get The Job Done Right.®

Copyright American Petroleum Institute
Reproduced by IHS under license with API
No reproduction or networking permitted without license from IHS

Not for Resale

Copyright American Petroleum Institute
Reproduced by IHS under license with API
No reproduction or networking permitted without license from IHS
Not for Resale

Additional copies are available through Global Engineering Documents at (800) 854-7179 or (303) 397-7956

Information about API Publications, Programs and Services is available on the World Wide Web at: http://www.api.org

American Petroleum Institute

1220 L Street, Northwest
Washington, D.C. 20005-4070
202-682-8000

Product No. C59406

Copyright American Petroleum Institute
Reproduced by IHS under license with API
No reproduction or networking permitted without license from IHS

Not for Resale